TOWN OF PLYMOUTH, MA

PLYMOUTH AIRPORT
WASTEWATER TREATMENT FACILITY IMPROVEMENTS

BID NO. 22205

SEPTEMBER 2022

SELECT BOARD

BETTY CAVACCO, CHAIRMAN
RICHARD QUINTAL JR., VICE CHAIRMAN
HARRY HELM
CHARLIE BLETZER
JOHN MAHONEY

TOWN MANAGER

DEREK BRINDISI

DEPARTMENT OF PUBLIC WORKS

JONATHAN BEDER, DIRECTOR
SHEILA SGARZI, TOWN ENGINEER

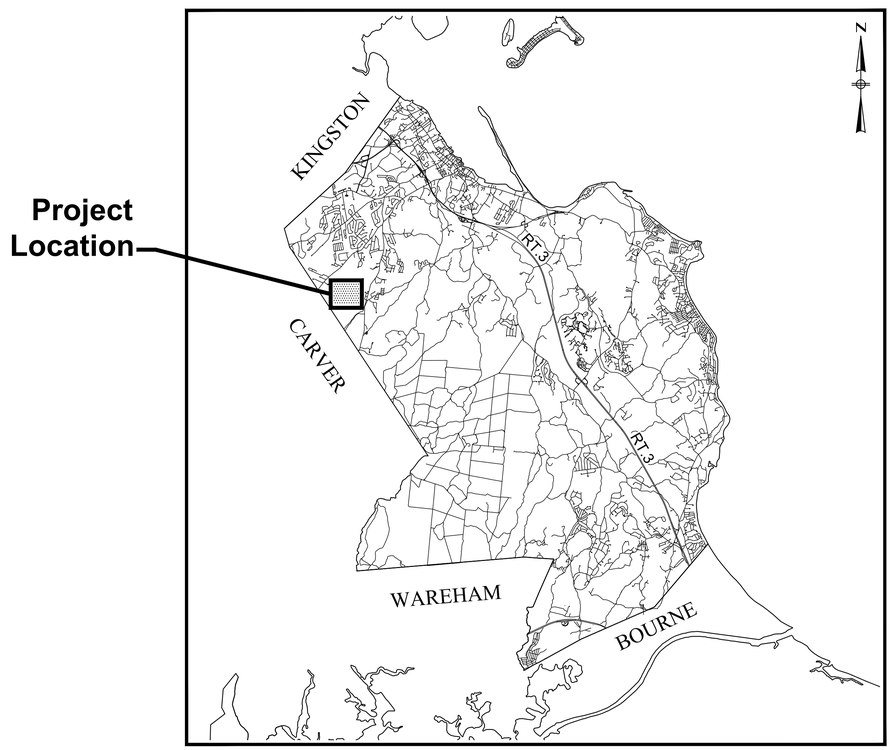

LOCATION MAP
NOT TO SCALE

PREPARED BY:

BETA
www.BETA-Inc.com

ISSUE DATE: 9/30/2022

PLAN INDEX

G-1 - PROCESS FLOW DIAGRAM
C-1 - WWTF SITE PLAN
C-2 - NORTHEAST PUMP STATION & CENTRAL PUMP STATION IMPROVEMENTS
M-1 - WASTEWATER TREATMENT FACILITY DEMOLITION PLAN
M-2 - PRE-EQ & SLUDGE STORAGE BASIN DEMOLITION SECTIONS
M-3 - POST-EQ & SBR BASIN DEMOLITION SECTIONS
M-4 - WASTEWATER TREATMENT FACILITY PROPOSED PLAN
M-5 - PRE-EQ & SBR BASIN SECTIONS
M-6 - POST-EQ & SBR BASIN SECTIONS
M-7 - SLUDGE STORAGE & SBR BASIN SECTIONS
M-8 - SBR BASIN SECTION & COVER DETAILS
M-9 - BLOWER ROOM PROPOSED PLAN & SECTIONS
MD-1 - MECHANICAL DETAILS
S-1 - STRUCTURAL NOTES
S-2 - FROST-PROTECTED SHALLOW FOUNDATION & GENERATOR PAD
S-3 - SBR BASIN BISECTING WALL PLAN & SECTION
S-4 - SBR BASIN WALKWAY PLAN & DETAILS
S-5 - SBR BASIN ENCLOSURE PLAN & DETAILS
H-1 - HVAC LEGEND AND GENERAL NOTES
H-2 - HVAC DEMOLITION PLAN
H-3 - HVAC NEW WORK PLAN
H-4 - HVAC NEW WORK ROOF PLAN
H-5 - HVAC SECTION
H-6 - HVAC SCHEDULES
H-7 - HVAC DETAILS I
H-8 - HVAC DETAILS II
P-1 - PLUMBING LEGEND AND GENERAL NOTES
P-2 - PLUMBING DEMOLITION PLAN
P-3 - PLUMBING NEW WORK PLAN
P-4 - PLUMBING NEW WORK SITE PLAN
P-5 - PLUMBING DETAILS
E-1 - ELECTRICAL LEGEND AND GENERAL NOTES
E-2 - ELECTRICAL ONE LINE DIAGRAMS
E-3 - ELECTRICAL SITE PLANS
E-4 - ELECTRICAL DEMOLITION PLAN
E-5 - ELECTRICAL POWER PLAN
E-6 - ELECTRICAL LIGHTING PLAN
E-7 - ELECTRICAL WIRING DIAGRAMS
E-8 - ELECTRICAL SCHEDULES
E-9 - ELECTRICAL DETAILS

COMMONWEALTH OF MASSACHUSETTS
ROBERT A. DRAKE
CIVIL
No. 41642
REGISTERED PROFESSIONAL ENGINEER

9/30/22

REGISTERED PROFESSIONAL

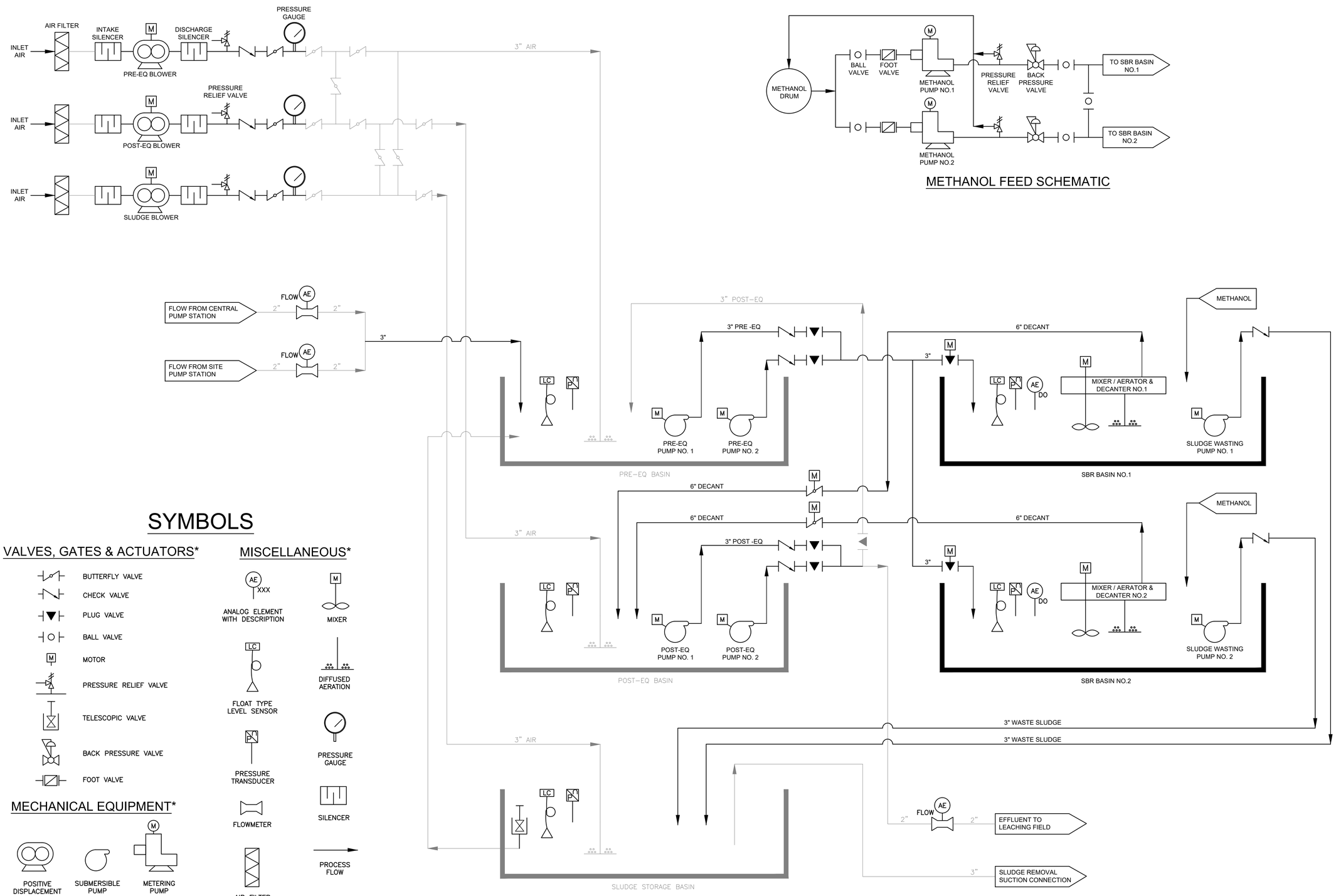

*NOTE:
ALL EXISTING FLOW STREAMS, VALVES, GATES, ACTUATORS, AND EQUIPMENT SHOWN LIGHT ON DRAWINGS, ALL NEW FLOW STREAMS, VALVES, GATES, ACTUATORS, AND EQUIPMENT SHOWN DARK ON DRAWINGS.

PREPARED BY

BETA
www.BETA-Inc.com

REGISTERED PROFESSIONAL

COMMONWEALTH OF MASSACHUSETTS
ROBERT A. DRAKE
CIVIL
No. 41642
REGISTERED PROFESSIONAL ENGINEER
9/30/22

SUBCONSULTANT

PROJECT

Plymouth Airport Wastewater Treatment Facility Improvements

Plymouth, MA

TITLE

Process Flow Diagram

NO.	REVISIONS	DATE

DRAWN BY:	BM
DESIGNED BY:	MA
CHECKED BY:	RD
ISSUE DATE:	9/30/2022
BETA JOB NO.:	10042

SCALE

NONE

UNLESS OTHERWISE NOTED OR CHANGED BY REPRODUCTION

SHEET NO.

G-1

9/30/2022 3:00 PM J:\5890 PLYMOUTH AIRPORT WWTF EVALUATION\10042 - WWTF UPGRADE\DESIGN\AUTOCAD\PLAN SET\PROCESS FLOW DIAGRAM.DWG (BETA STB BW.STB)

LEGEND

127 CONTOUR

GRAVEL ACCESS AND PARKING AREA

W WATERLINE

FENCE

FORCEMAIN

SEWER

G GASLINE

MANHOLE

C.O. CLEAN OUT

BOLLARD

SITE PLAN SOURCE:

PLYMOUTH MUNICIPAL AIRPORT WASTEWATER TREATMENT PLAN AND COLLECTION SYSTEM ASMP 2000 PYM-06. SHEET C-1, WWTF SITE LAYOUT, GRADING AND UTILITIES PLAN, BY DUBOIS & KING INC.

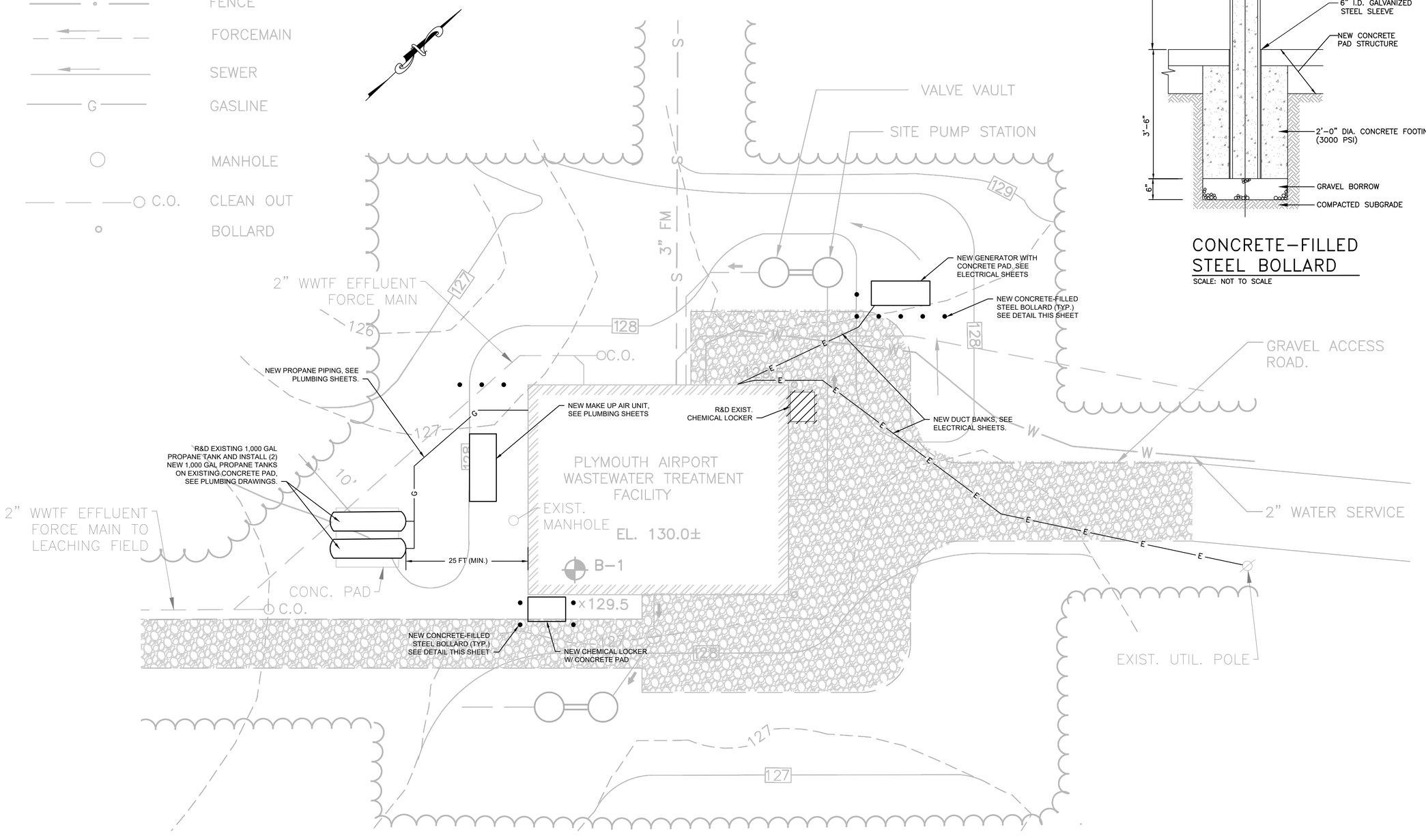

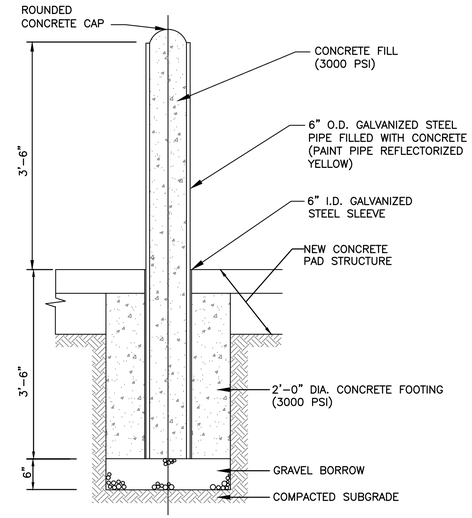

CONCRETE-FILLED STEEL BOLLARD

SCALE: NOT TO SCALE

PREPARED BY

BETA

www.BETA-Inc.com

REGISTERED PROFESSIONAL

COMMONWEALTH OF MASSACHUSETTS ROBERT A. DRAKE CIVIL No. 41642 REGISTERED PROFESSIONAL ENGINEER

9/30/22

SUBCONSULTANT

PROJECT

Plymouth Airport Wastewater Treatment Facility Improvements

Plymouth, MA

TITLE

WWTF Site Plan

NO.	REVISIONS	DATE

DRAWN BY:	BM
DESIGNED BY:	MA
CHECKED BY:	RD
ISSUE DATE:	9/30/2022
BETA JOB NO.:	10042

SCALE

10 0 10 20

SCALE IN FEET: 1"=10'

UNLESS OTHERWISE NOTED OR CHANGED BY REPRODUCTION

SHEET NO.

C-1

9/30/2022 3:00 PM J:\5890 PLYMOUTH AIRPORT WWTF EVALUATION\10042 - WWTF UPGRADE\DESIGN\AUTOCAD\PLAN SET\WWTF SITE PLAN - EXIST.DWG (BETA STB BW.STB)

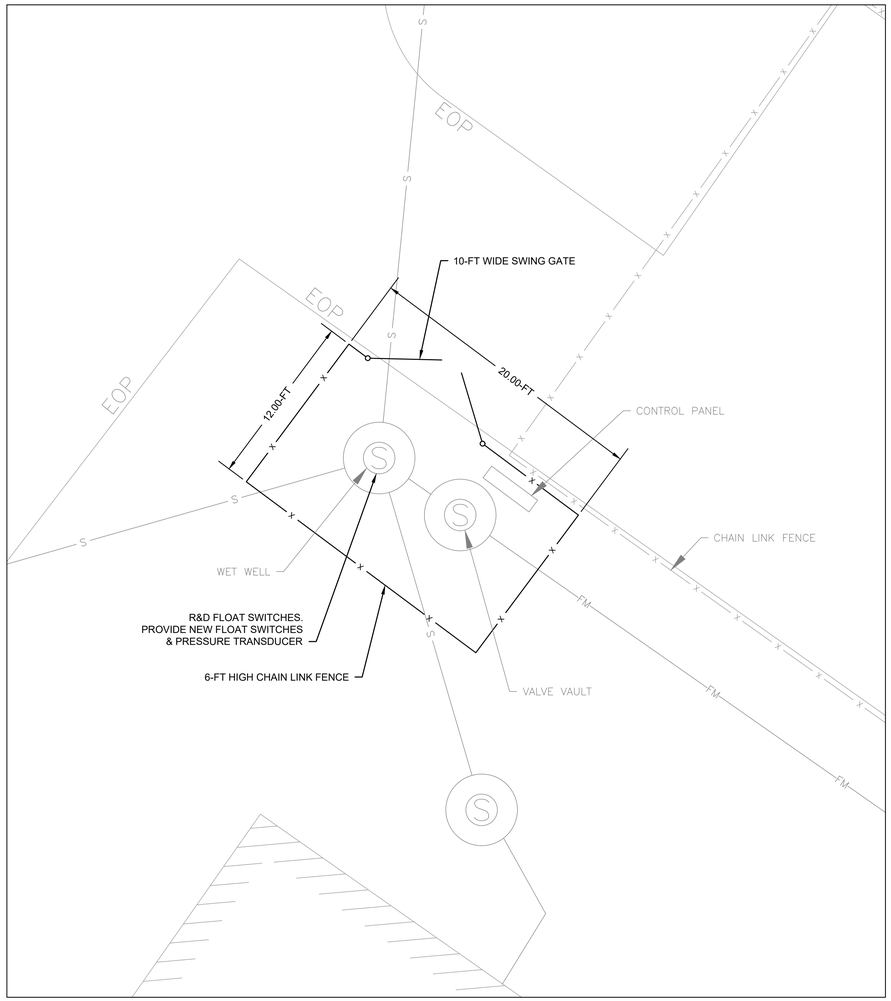

NORTHEAST PUMP STATION

SCALE: 1"= 5'-0"

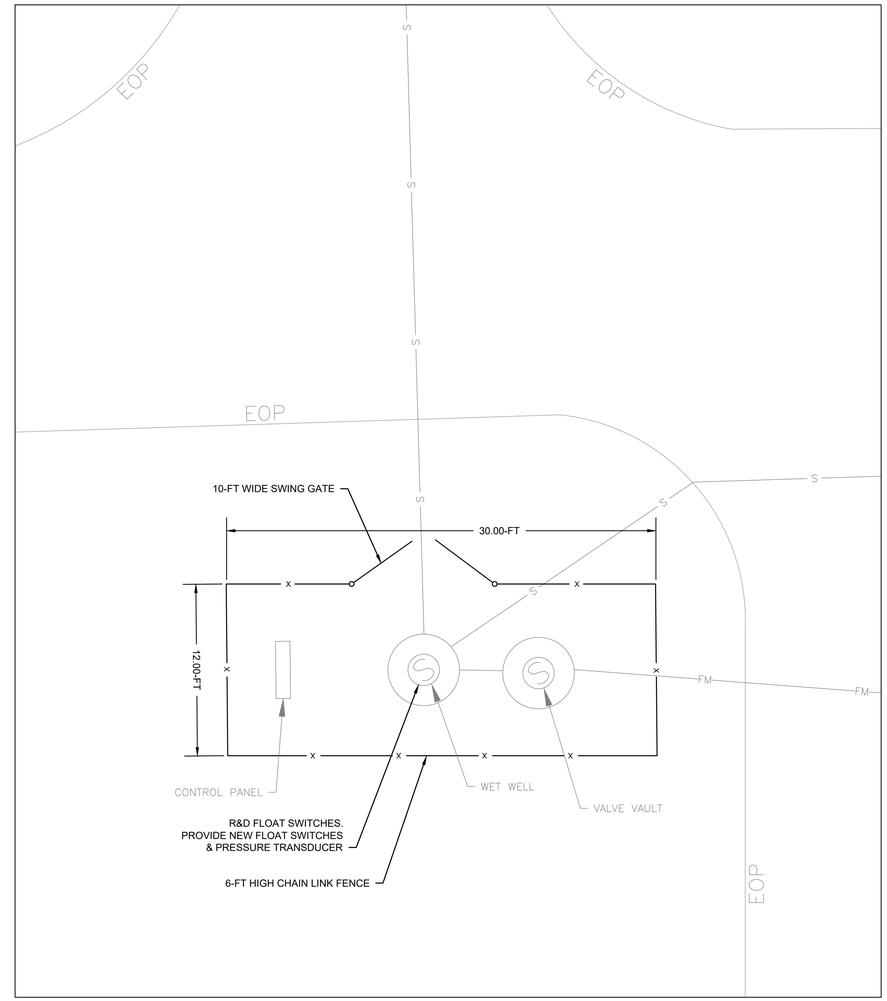

CENTRAL PUMP STATION

SCALE: 1"= 5'-0"

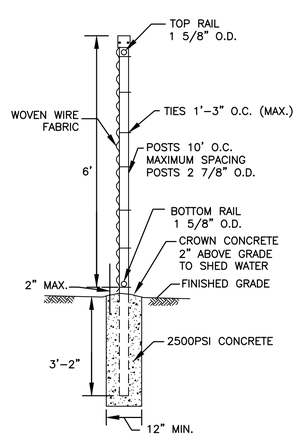

TYPICAL CHAIN-LINK FENCE SECTION

SCALE: NOT TO SCALE

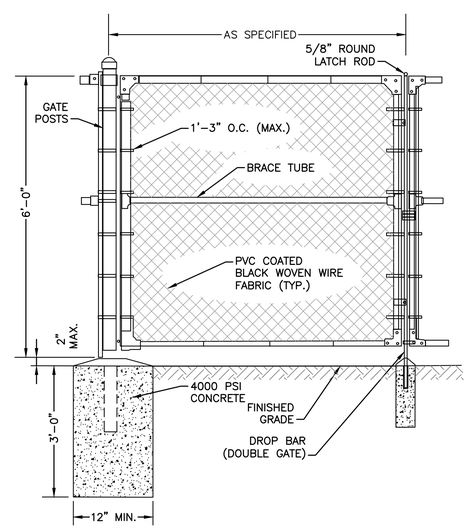

TYPICAL SWING GATE

SCALE: NOT TO SCALE

PREPARED BY

BETA
www.BETA-Inc.com

REGISTERED PROFESSIONAL

COMMONWEALTH OF MASSACHUSETTS
ROBERT A. DRAKE
CIVIL
No. 41642
REGISTERED PROFESSIONAL ENGINEER
9/30/22

SUBCONSULTANT

PROJECT

Plymouth Airport Wastewater Treatment Facility Improvements

Plymouth, MA

TITLE

Northeast Pump Station & Central Pump Station Improvements

NO.	REVISIONS	DATE

DRAWN BY:	BM
DESIGNED BY:	MA
CHECKED BY:	RD
ISSUE DATE:	9/30/2022
BETA JOB NO.:	10042

SCALE

AS SHOWN

UNLESS OTHERWISE NOTED OR CHANGED BY REPRODUCTION

SHEET NO.

C-2

9/30/2022 3:00 PM J:\15890 PLYMOUTH AIRPORT WWTF EVALUATION\10042 - WWTF UPGRADE\DESIGN\AUTOCAD\PLAN SET\CENTRAL PS & NORTHEAST PS SITE PLANS - EXIST.DWG (BETA STB BW.STB)

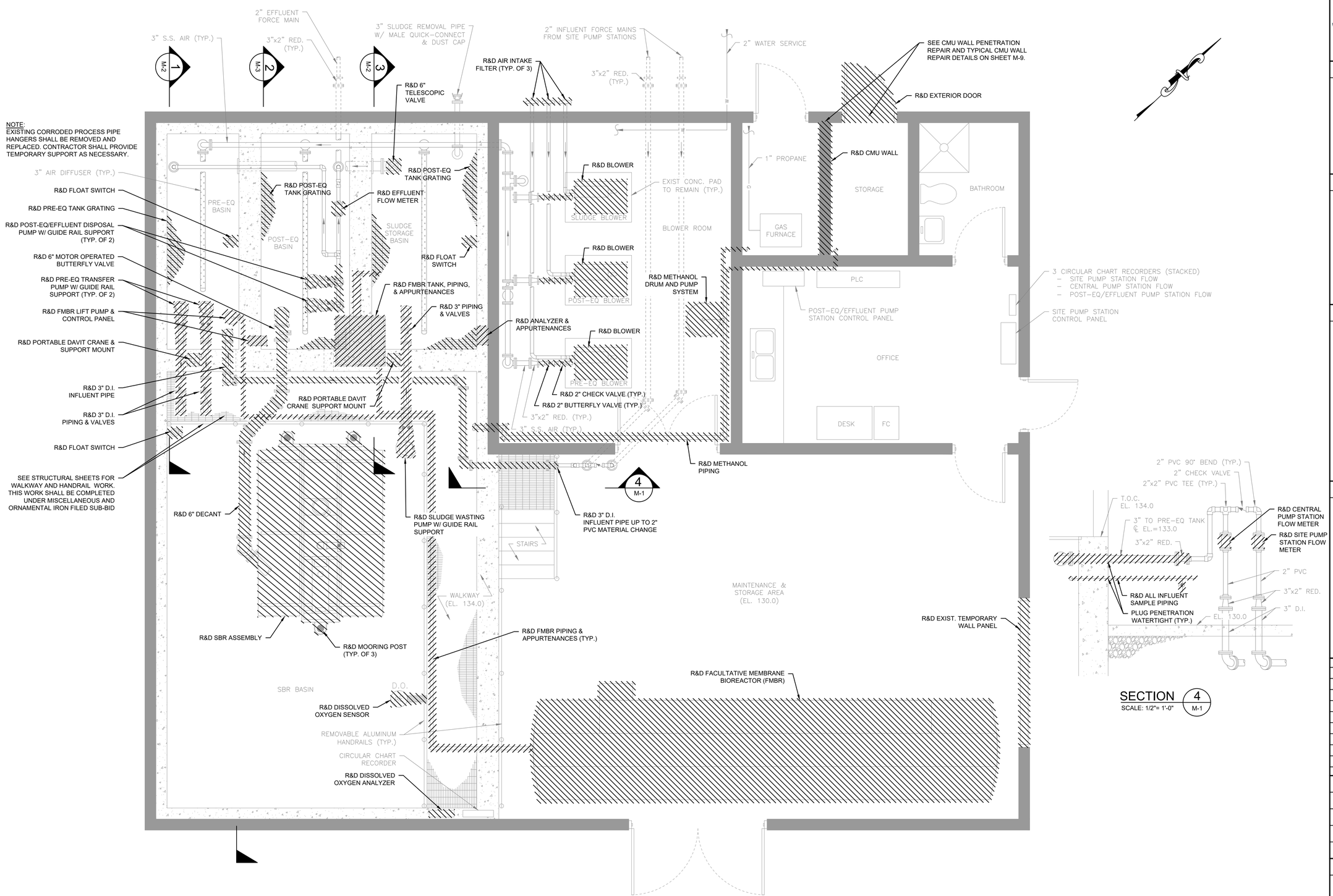

WWTF BUILDING PLAN

SCALE: 3/8"= 1'-0"

SECTION 4 / M-1

SCALE: 1/2"= 1'-0"

PREPARED BY

BETA
www.BETA-Inc.com

REGISTERED PROFESSIONAL

COMMONWEALTH OF MASSACHUSETTS
ROBERT A. DRAKE
CIVIL
No. 41642
REGISTERED PROFESSIONAL ENGINEER
9/30/22

SUBCONSULTANT

PROJECT

Plymouth Airport Wastewater Treatment Facility Improvements

Plymouth, MA

TITLE

Wastewater Treatment Facility Demolition Plan

NO.	REVISIONS	DATE

DRAWN BY:	BM
DESIGNED BY:	MA
CHECKED BY:	RD
ISSUE DATE:	9/30/2022
BETA JOB NO.:	10042

SCALE

AS SHOWN

UNLESS OTHERWISE NOTED OR CHANGED BY REPRODUCTION

SHEET NO.

M-1

9/30/2022 3:01 PM J:\5890 PLYMOUTH AIRPORT WWTF EVALUATION\10042 - WWTF UPGRADE\DESIGN\AUTOCAD\PLAN SET\PLYMOUTH AIRPORT WWTF - BUILDING - DEMOLITION PLANS & SECTIONS.DWG (BETA STB BW.STB)

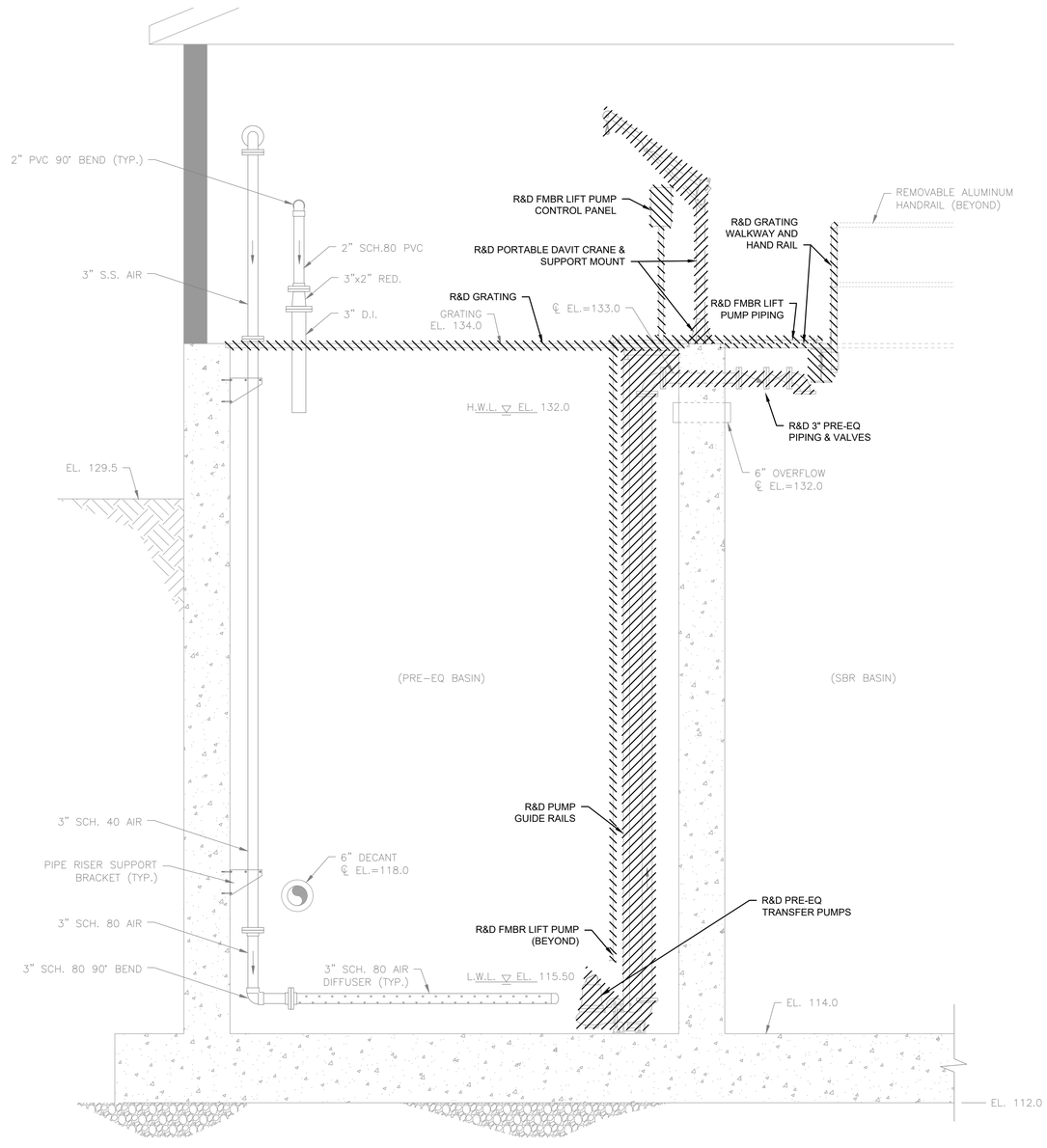

SECTION 1
SCALE: 1/2"= 1'-0"
M-1

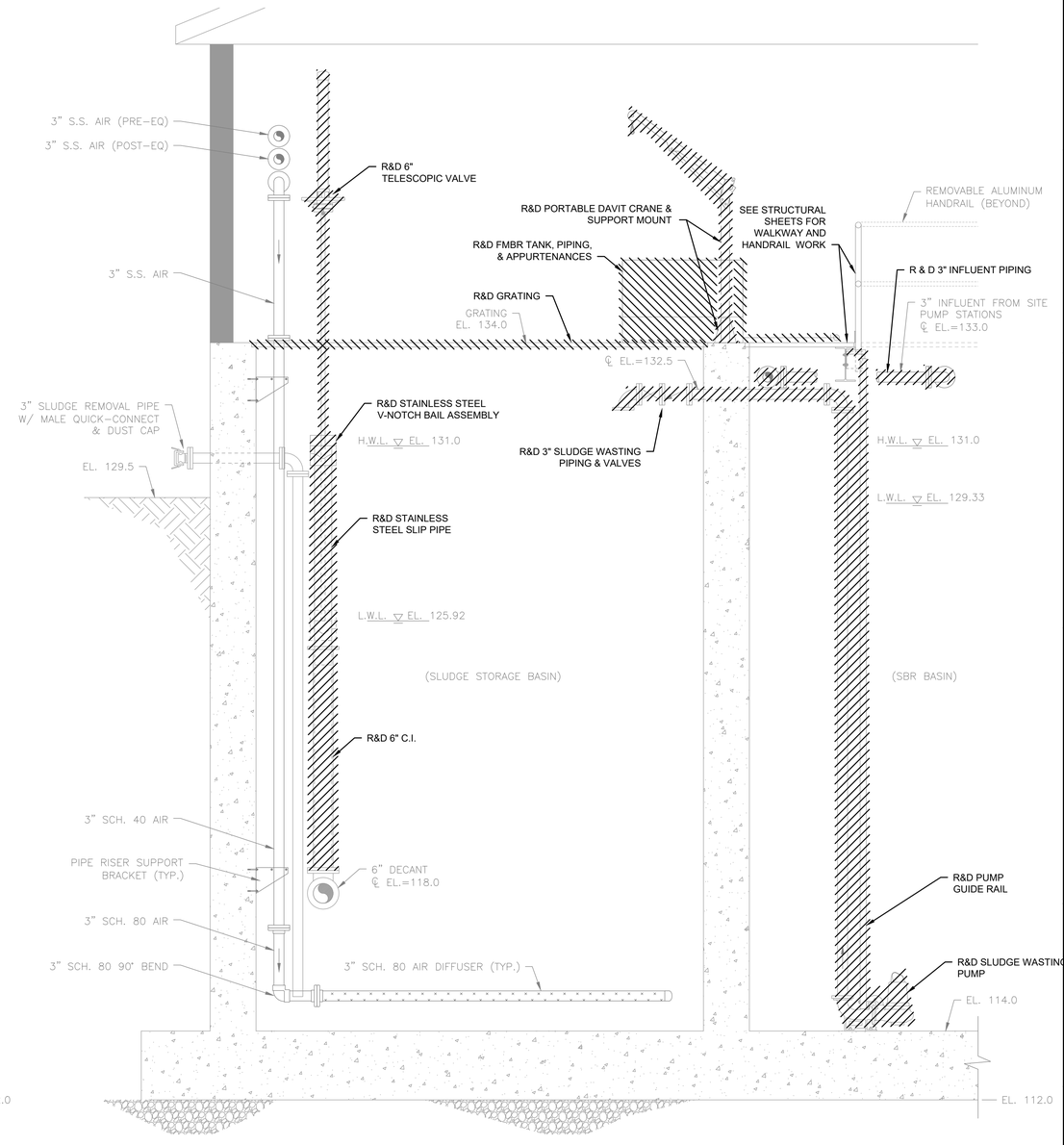

SECTION 3
SCALE: 1/2"= 1'-0"
M-1

PREPARED BY

BETA
www.BETA-Inc.com

REGISTERED PROFESSIONAL

COMMONWEALTH OF MASSACHUSETTS
ROBERT A. DRAKE
CIVIL
No. 41642
REGISTERED PROFESSIONAL ENGINEER

9/30/22

SUBCONSULTANT

PROJECT

Plymouth Airport Wastewater Treatment Facility Improvements

Plymouth, MA

TITLE

Pre-EQ & Sludge Storage Basin Demolition Sections

NO.	REVISIONS	DATE

DRAWN BY:	BM
DESIGNED BY:	MA
CHECKED BY:	RD
ISSUE DATE:	9/30/2022
BETA JOB NO.:	10042

SCALE

AS SHOWN

UNLESS OTHERWISE NOTED OR CHANGED BY REPRODUCTION

SHEET NO.

M-2

9/30/2022 3:01 PM J:\5890 PLYMOUTH AIRPORT WWTF EVALUATION\10042 - WWTF UPGRADE\DESIGN\AUTOCAD\PLAN SET\PLYMOUTH AIRPORT WWTF - BUILDING - DEMOLITION PLANS & SECTIONS.DWG (BETA STB BW.STB)

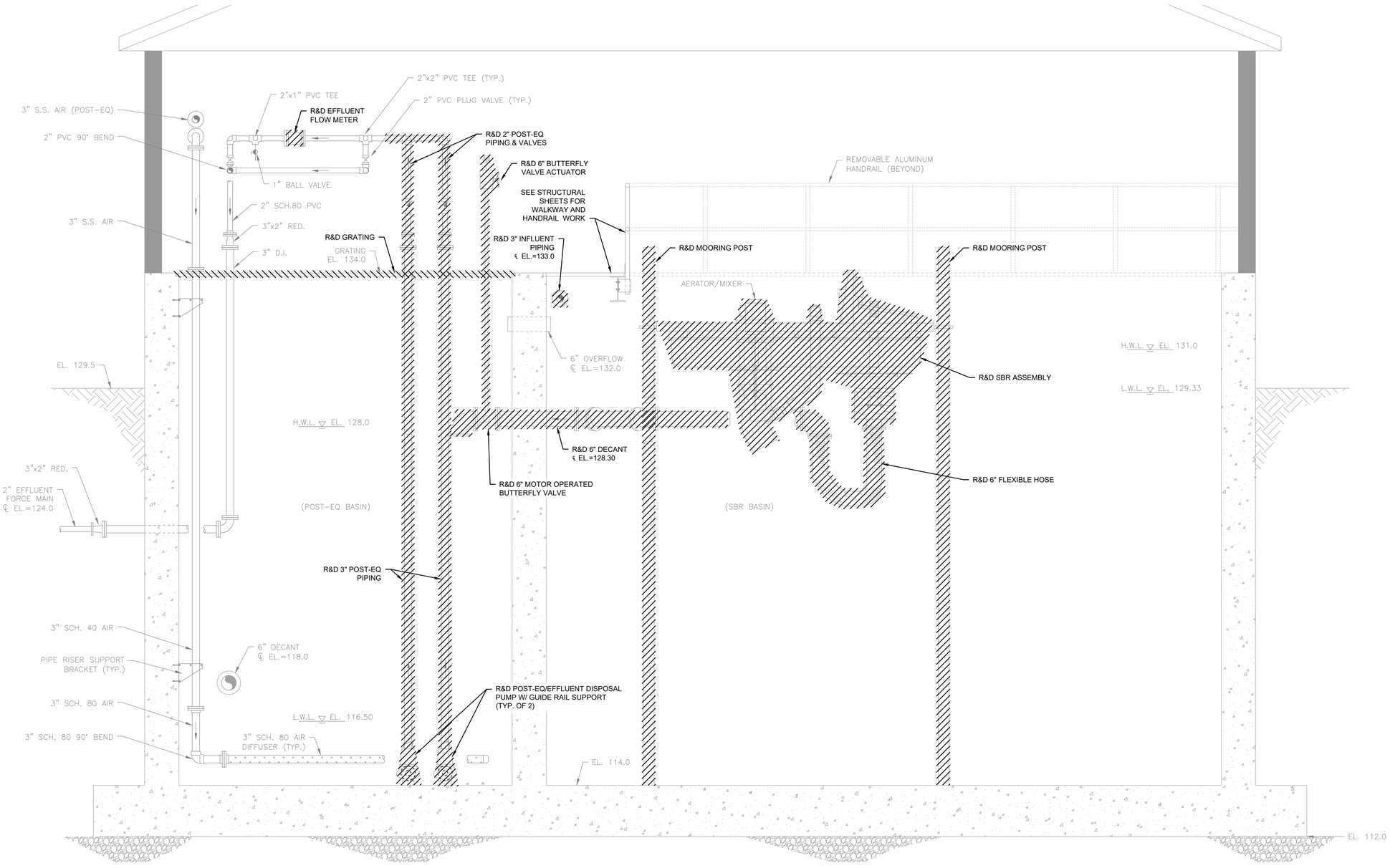

SECTION 2 / M-1

SCALE: 1/2"= 1'-0"

9/30/2022 3:01 PM J:\15890 PLYMOUTH AIRPORT WWTF EVALUATION\10042 - WWTF UPGRADE\DESIGN\AUTOCAD\PLAN SET\PLYMOUTH AIRPORT WWTF - BUILDING - DEMOLITION PLANS & SECTIONS.DWG (BETA STB BW.STB)

PREPARED BY

BETA
www.BETA-Inc.com

REGISTERED PROFESSIONAL

COMMONWEALTH OF MASSACHUSETTS
ROBERT A. DRAKE
CIVIL
No. 41642
REGISTERED PROFESSIONAL ENGINEER
9/30/22

SUBCONSULTANT

PROJECT

Plymouth Airport Wastewater Treatment Facility Improvements

Plymouth, MA

TITLE

Post-EQ & SBR Basin Demolition Sections

NO.	REVISIONS	DATE

DRAWN BY:	BM
DESIGNED BY:	MA
CHECKED BY:	RD
ISSUE DATE:	9/30/2022
BETA JOB NO.:	10042

SCALE

AS SHOWN

UNLESS OTHERWISE NOTED OR CHANGED BY REPRODUCTION

SHEET NO.

M-3

NOTE:
EXISTING CORRODED PROCESS PIPE HANGERS SHALL BE REMOVED AND REPLACED. CONTRACTOR SHALL PROVIDE TEMPORARY SUPPORT AS NECESSARY.

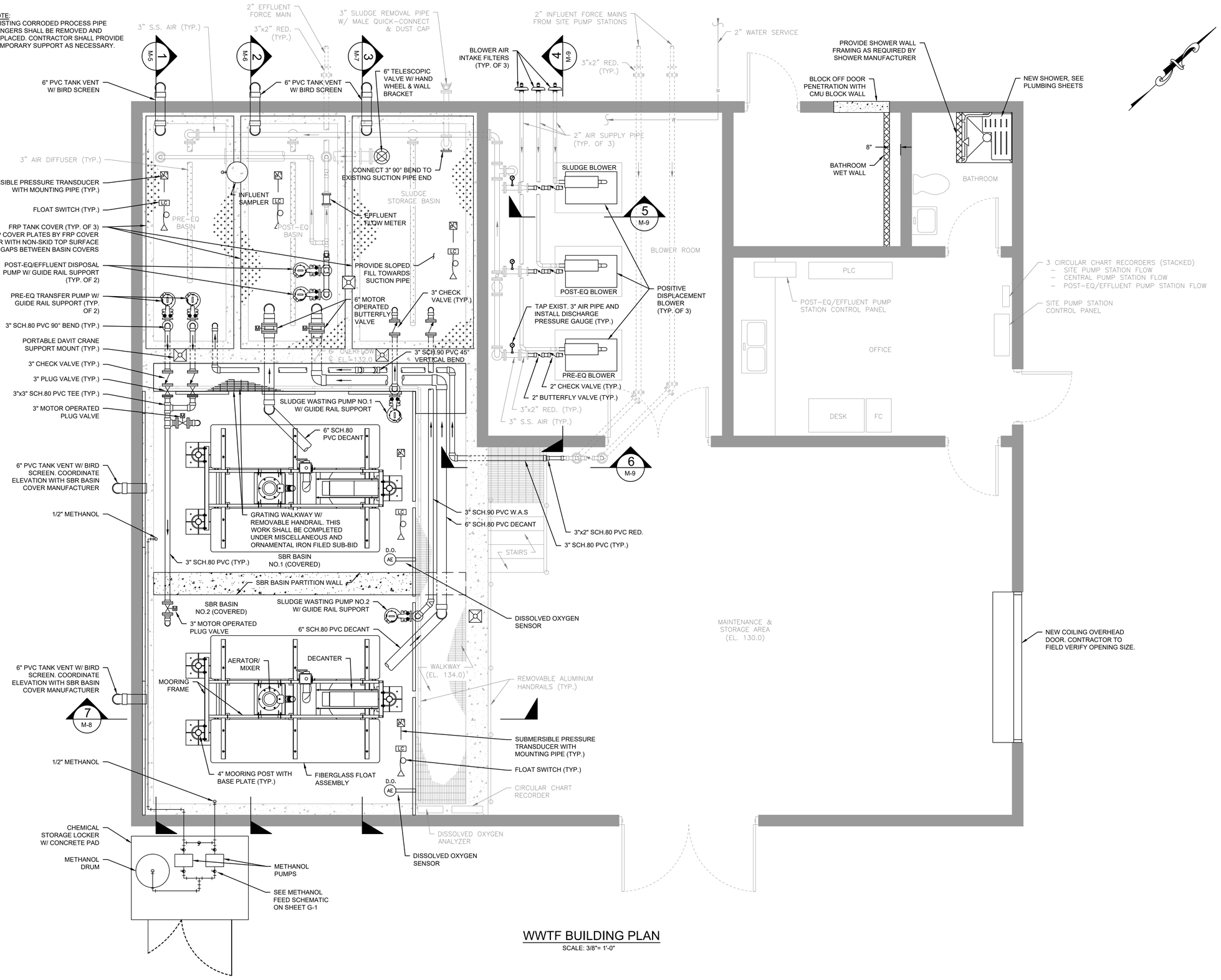

WWTF BUILDING PLAN

SCALE: 3/8"= 1'-0"

PREPARED BY

BETA
www.BETA-Inc.com

REGISTERED PROFESSIONAL

COMMONWEALTH OF MASSACHUSETTS
ROBERT A. DRAKE
CIVIL
No. 41542
REGISTERED PROFESSIONAL ENGINEER
9/30/22

SUBCONSULTANT

PROJECT

Plymouth Airport Wastewater Treatment Facility Improvements

Plymouth, MA

TITLE

Wastewater Treatment Facility Proposed Plan

NO.	REVISIONS	DATE

DRAWN BY:	BM
DESIGNED BY:	MA
CHECKED BY:	RD
ISSUE DATE:	9/30/2022
BETA JOB NO.:	10042

SCALE

AS SHOWN

UNLESS OTHERWISE NOTED OR CHANGED BY REPRODUCTION

SHEET NO.

M-4

9/30/2022 3:01 PM J:\5890 PLYMOUTH AIRPORT WWTF EVALUATION\10042 - WWTF UPGRADE\DESIGN\AUTOCAD\PLAN SET\PLYMOUTH AIRPORT WWTF - BUILDING - PROPOSED PLANS & SECTIONS.DWG (BETA STB BW STB)

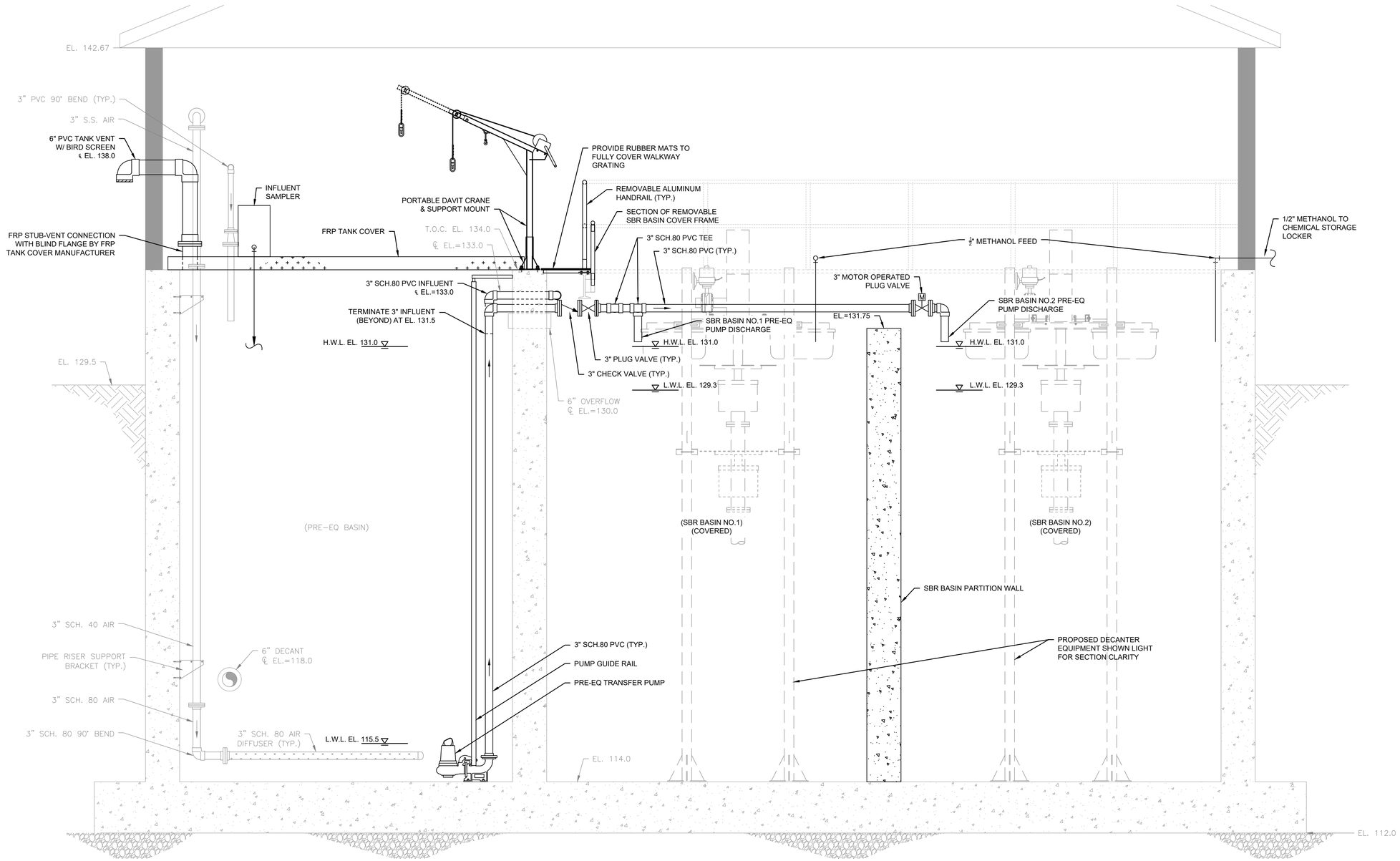

SECTION 1 (M-4)
SCALE: 1/2"= 1'-0"

PREPARED BY

BETA
www.BETA-Inc.com

REGISTERED PROFESSIONAL

COMMONWEALTH OF MASSACHUSETTS
ROBERT A. DRAKE
CIVIL
No. 41642
REGISTERED PROFESSIONAL ENGINEER
9/30/22

SUBCONSULTANT

PROJECT

Plymouth Airport Wastewater Treatment Facility Improvements

Plymouth, MA

TITLE

Pre-EQ & SBR Basin Sections

NO.	REVISIONS	DATE

DRAWN BY:	BM
DESIGNED BY:	MA
CHECKED BY:	RD
ISSUE DATE:	9/30/2022
BETA JOB NO.:	10042

SCALE

AS SHOWN

UNLESS OTHERWISE NOTED OR CHANGED BY REPRODUCTION

SHEET NO.

M-5

9/30/2022 3:02 PM J:\5890 PLYMOUTH AIRPORT WWTF EVALUATION\10042 - WWTF UPGRADE\DESIGN\AUTOCAD\PLAN SET\PLYMOUTH AIRPORT WWTF - BUILDING - PROPOSED PLANS & SECTIONS.DWG (BETA STB BW.STB)

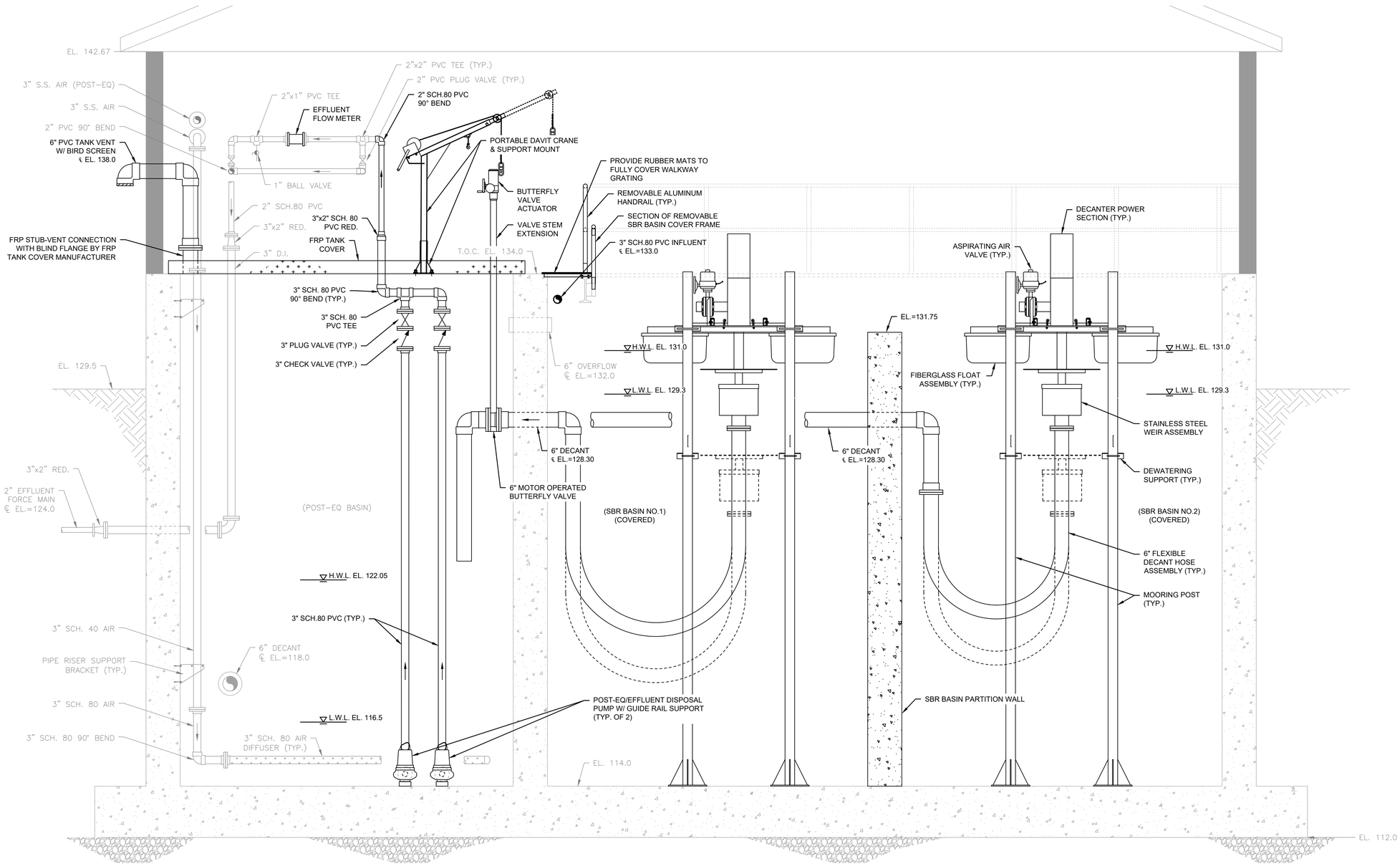

SECTION 2 / M-4

SCALE: 1/2"= 1'-0"

PREPARED BY

BETA
www.BETA-Inc.com

REGISTERED PROFESSIONAL

COMMONWEALTH OF MASSACHUSETTS
ROBERT A. DRAKE
CIVIL
No. 41642
REGISTERED PROFESSIONAL ENGINEER
9/30/22

SUBCONSULTANT

PROJECT

Plymouth Airport Wastewater Treatment Facility Improvements

Plymouth, MA

TITLE

Post-EQ & SBR Basin Sections

NO.	REVISIONS	DATE

DRAWN BY:	BM
DESIGNED BY:	MA
CHECKED BY:	RD
ISSUE DATE:	9/30/2022
BETA JOB NO.:	10042

SCALE

AS SHOWN

UNLESS OTHERWISE NOTED OR CHANGED BY REPRODUCTION

SHEET NO.

M-6

9/30/2022 3:02 PM J:\5890 PLYMOUTH AIRPORT WWTF EVALUATION\10042 - WWTF UPGRADE\DESIGN\AUTOCAD\PLAN SET\PLYMOUTH AIRPORT WWTF - BUILDING - PROPOSED PLANS & SECTIONS.DWG (BETA STB BW STB)

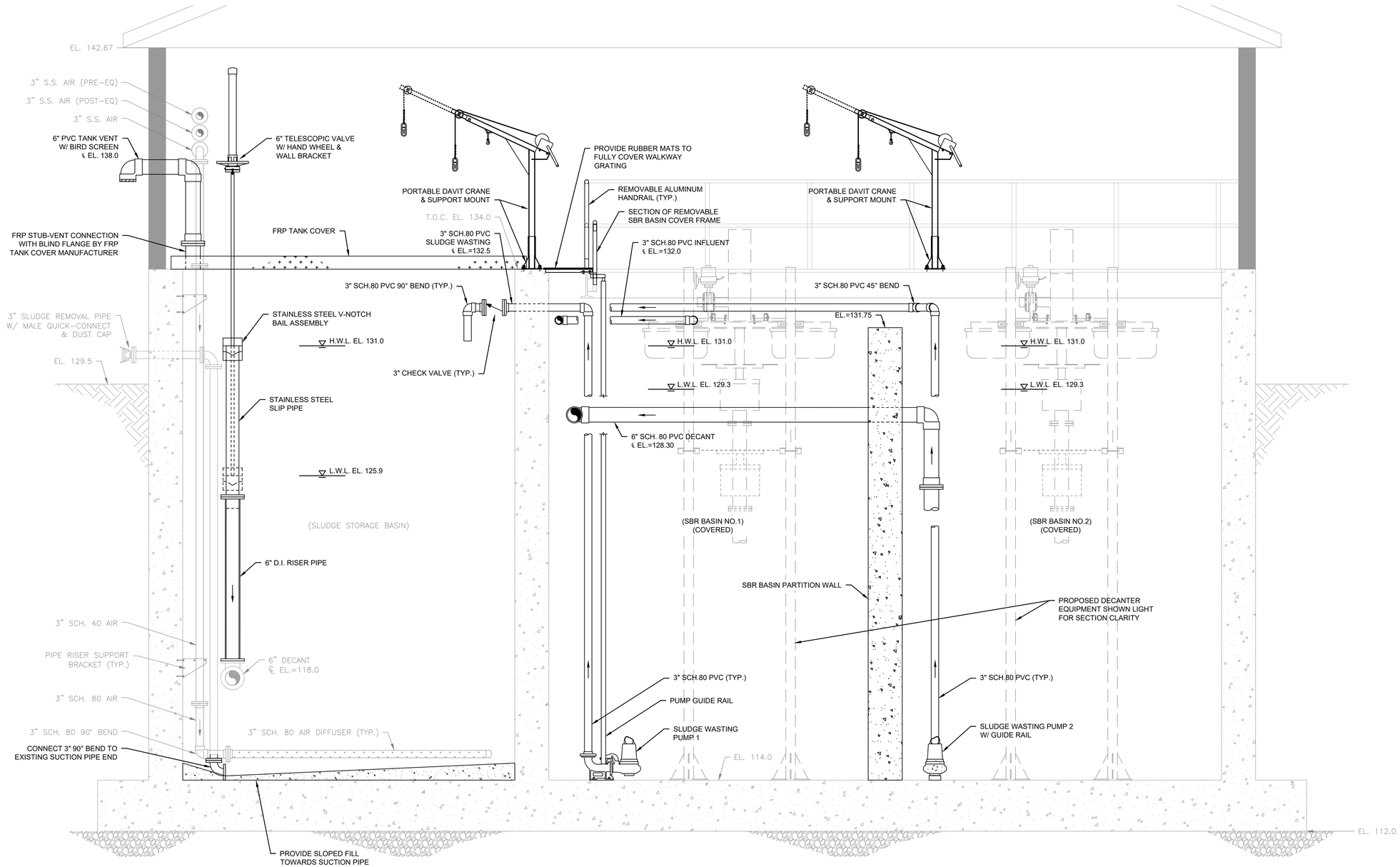

SECTION 3 / M-4

SCALE: 1/2"= 1'-0"

9/30/2022 3:02 PM J:\5890 PLYMOUTH AIRPORT WWTF EVALUATION\10042 - WWTF UPGRADE\DESIGN\AUTOCAD\PLAN SET\PLYMOUTH AIRPORT WWTF - BUILDING - PROPOSED PLANS & SECTIONS.DWG (BETA STB BW.STB)

PREPARED BY

BETA
www.BETA-Inc.com

REGISTERED PROFESSIONAL

COMMONWEALTH OF MASSACHUSETTS
ROBERT A. DRAKE
CIVIL
No. 41642
REGISTERED PROFESSIONAL ENGINEER
9/30/22

SUBCONSULTANT

PROJECT

Plymouth Airport Wastewater Treatment Facility Improvements

Plymouth, MA

TITLE

Sludge Storage & SBR Basin Sections

NO.	REVISIONS	DATE

DRAWN BY:	BM
DESIGNED BY:	MA
CHECKED BY:	RD
ISSUE DATE:	9/30/2022
BETA JOB NO.:	10042

SCALE

AS SHOWN

UNLESS OTHERWISE NOTED OR CHANGED BY REPRODUCTION

SHEET NO.

M-7

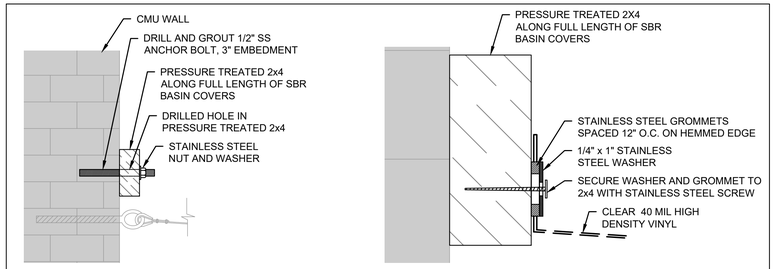

2x4 CONNECTION TO CMU WALL
SCALE: NONE

VINYL COVER CONNECTION TO 2X4
SCALE: NONE

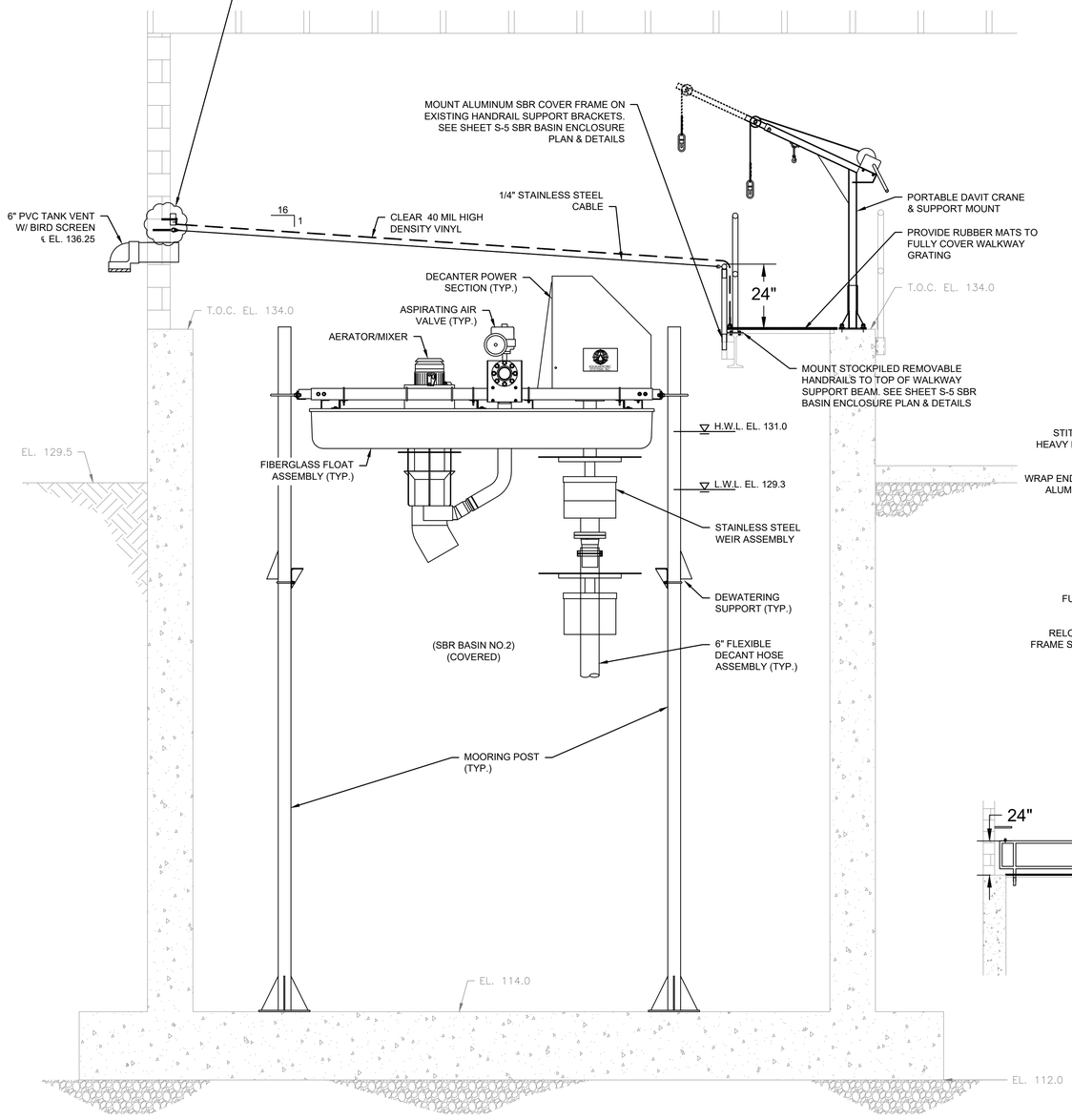

SECTION 7 / M-4
SCALE: 1/2"= 1'-0"

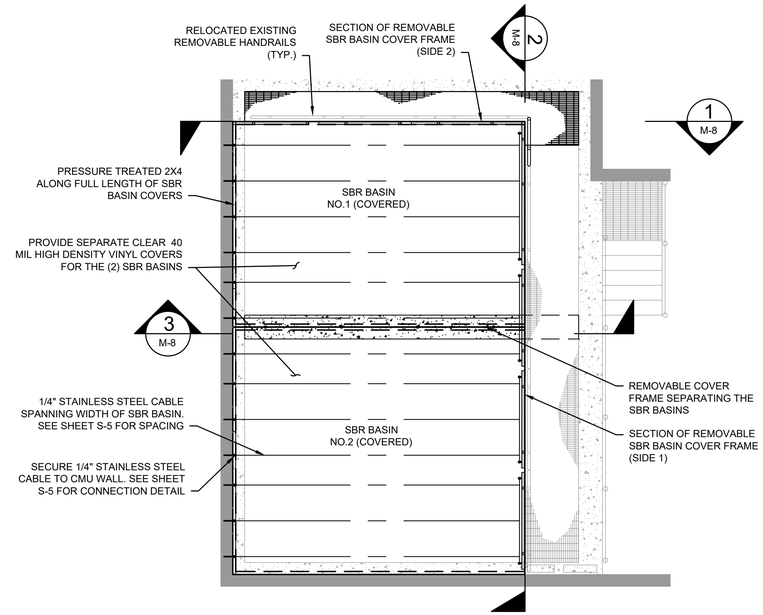

SBR BASIN COVER PLAN
SCALE: 1/4"= 1'-0"

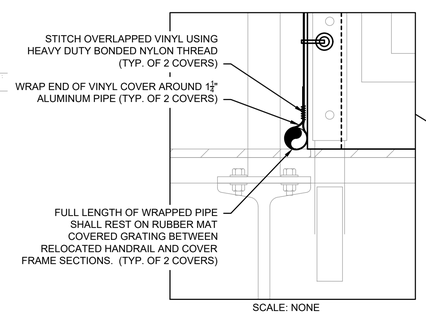

SCALE: NONE

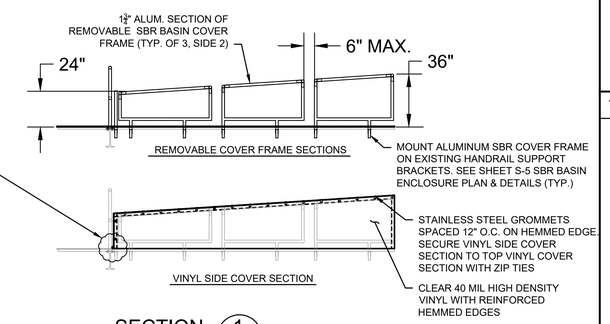

SECTION 1 / M-8
SCALE: 1/4"= 1'-0"

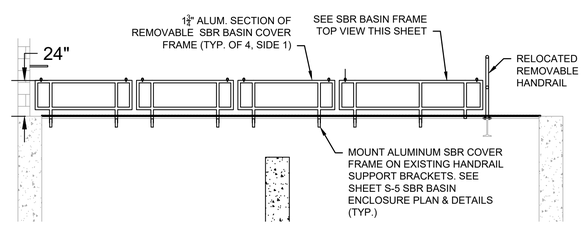

SECTION 2 / M-8
SCALE: 1/4"= 1'-0"

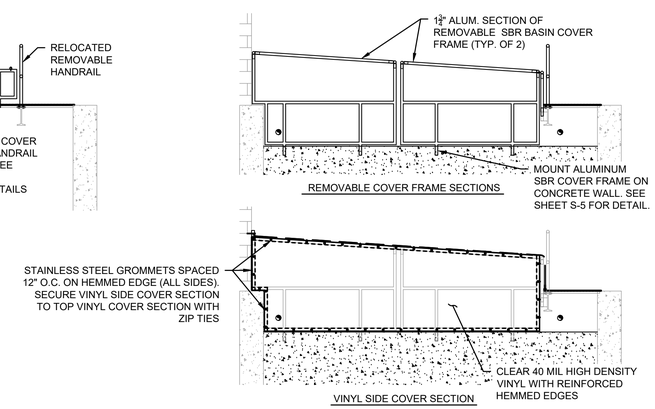

SECTION 3 / M-8
SCALE: 1/4"= 1'-0"

PREPARED BY

BETA
www.BETA-Inc.com

REGISTERED PROFESSIONAL

SUBCONSULTANT

PROJECT

Plymouth Airport Wastewater Treatment Facility Improvements

Plymouth, MA

TITLE

SBR Basin Section & Cover Details

NO.	REVISIONS	DATE

DRAWN BY:	BM
DESIGNED BY:	MA
CHECKED BY:	RD
ISSUE DATE:	9/30/2022
BETA JOB NO.:	10042

SCALE

AS SHOWN

UNLESS OTHERWISE NOTED OR CHANGED BY REPRODUCTION

SHEET NO.

M-8

9/30/2022 3:04 PM J:\5890 PLYMOUTH AIRPORT WWTF EVALUATION\10042 - WWTF UPGRADE\DESIGN\AUTOCAD\PLAN SET\PLYMOUTH AIRPORT WWTF - BUILDING - PROPOSED PLANS & SECTIONS.DWG (BETA STB BW STB)

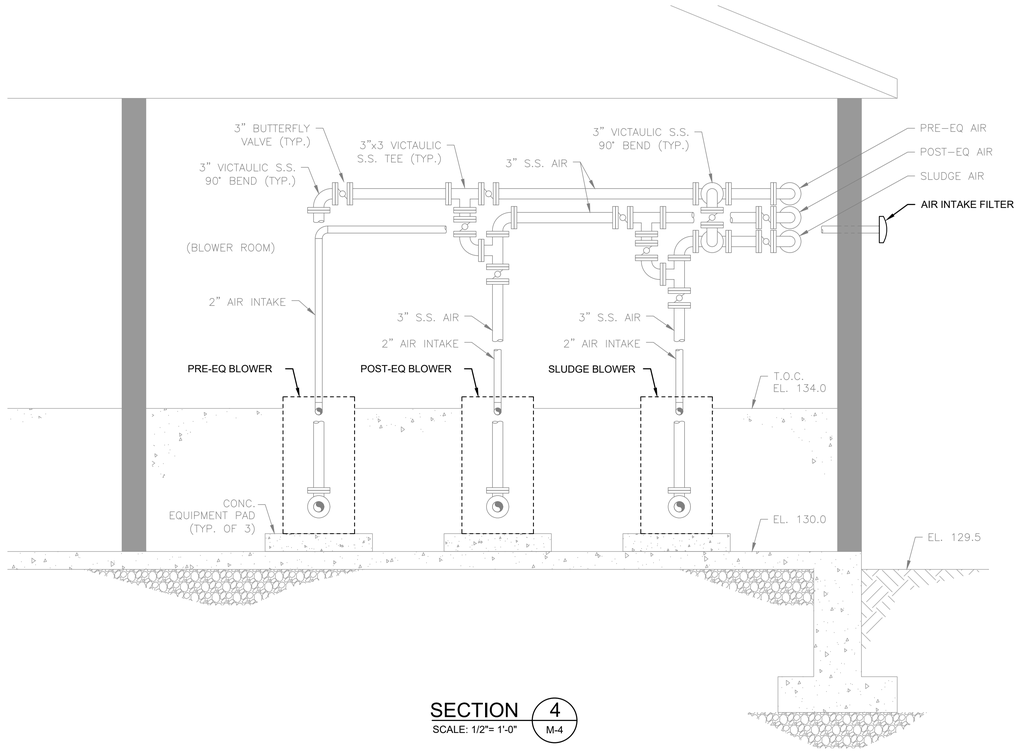

SECTION 4 / M-4
SCALE: 1/2"= 1'-0"

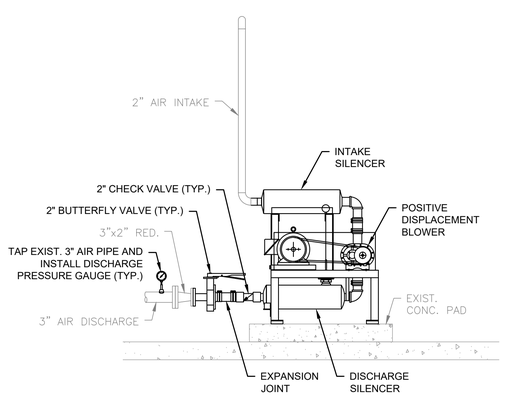

SECTION 5 / M-4
SCALE: 1/2"= 1'-0"

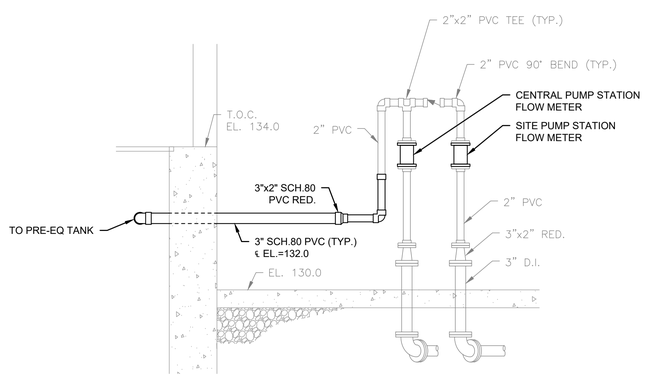

SECTION 6 / M-4
SCALE: 1/2"= 1'-0"

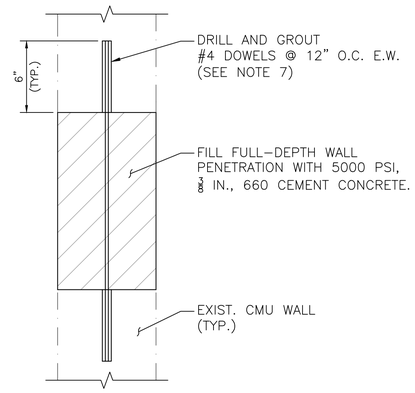

CMU WALL PENETRATION REPAIR
NOT TO SCALE

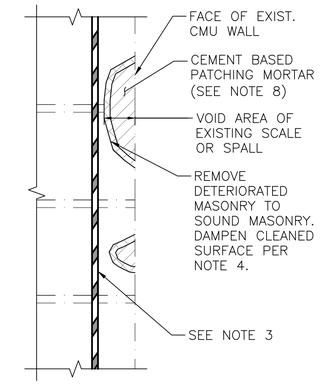

TYPICAL CMU WALL REPAIR
NOT TO SCALE

MASONRY REPAIR NOTES:

1. THE ACTUAL LOCATIONS AND EXTENT OF VARIOUS TYPES OF CMU REPAIR WILL BE DETERMINED IN THE FIELD BY THE CONTRACTOR. THE CONTRACTOR SHALL REPAIR ALL AREAS DETERMINED NECESSARY AS DIRECTED BY THE ENGINEER AFTER THE CONTRACTOR HAS SOUNDED AND MARKED OUT ALL REPAIR AREAS.
2. REMOVE ALL SPALLED AND UNSOUND MASONRY FROM AREA TO BE REPAIRED. IF RUSTY REINFORCING STEEL IS PRESENT IT MUST BE ABRASIVE BLASTED TO REMOVE RUST.
3. IF REINFORCING STEEL IS ENCOUNTERED, REMOVE ENOUGH MATERIAL TO COMPLETELY EXPOSE REINFORCING STEEL. ALL EXPOSED STEEL SHALL BE THOROUGHLY BLAST CLEANED TO A WHITE METAL FINISH AND COATED WITH EPOXY IN ACCORDANCE WITH ASTM D3963. BLAST CLEANING AND EPOXY SHALL BE INCLUDED IN THE RESPECTIVE MASONRY REPAIR ITEM.
4. CLEAN SURFACE TO BE FREE OF ALL MATERIALS INCLUDING DUST, OIL, DIRT AND GREASE. DAMPEN WITH CLEAN WATER BEFORE PATCHING AND REMOVE STANDING WATER. REPAIR MORTAR SHALL BE TROWEL APPLIED TO DAMPENED SURFACE. AFTER INITIAL SET, THE MATERIAL SHALL BE TRIMMED AND SHAPED TO MATCH THE CONTOURS OF EXISTING PATCH AREA.
5. COST OF DRILLING AND GROUTING DOWELS SHALL BE CONSIDERED INCIDENTAL TO MASONRY REHABILITATION.
6. EXISTING MASONRY NEAR REPAIR LOCATIONS SHALL BE CLEANED WITH A HYDROCARBON SOLVENT TO REMOVE OIL AND GREASE. THE SURFACE SHALL THEN BE CLEANED WITH A TRISODIUM PHOSPHATE SOLUTION PRIOR TO APPLYING PAINT.
7. DRILLING AND GROUTING REINFORCING IS REQUIRED FOR PENETRATIONS 12" OR GREATER IN ANY DIRECTION. PENETRATIONS LESS THAN 12" DO NOT REQUIRE REINFORCING.
8. IF DEPTH OF VOIDED AREA EXCEEDS 3" USE 5000 PSI, 3/8" IN, 660 CEMENT CONCRETE.

LEGEND:

- DETERIORATED MASONRY TO BE REMOVED.
- REINFORCING STEEL.
- ADDITIONAL MASONRY TO BE REMOVED.

PREPARED BY

BETA
www.BETA-Inc.com

REGISTERED PROFESSIONAL

COMMONWEALTH OF MASSACHUSETTS
ROBERT A. DRAKE
CIVIL
No. 41542
REGISTERED PROFESSIONAL ENGINEER
9/30/22

SUBCONSULTANT

PROJECT

Plymouth Airport Wastewater Treatment Facility Improvements

Plymouth, MA

TITLE

Blower Room Proposed Plan & Sections

NO.	REVISIONS	DATE

DRAWN BY:	BM
DESIGNED BY:	MA
CHECKED BY:	RD
ISSUE DATE:	9/30/2022
BETA JOB NO.:	10042

SCALE

AS SHOWN

UNLESS OTHERWISE NOTED OR CHANGED BY REPRODUCTION

SHEET NO.

M-9

9/30/2022 3:05 PM J:\5890 PLYMOUTH AIRPORT WWTF EVALUATION\10042 - WWTF UPGRADE\DESIGN\AUTOCAD\PLAN SET\PLYMOUTH AIRPORT WWTF - BUILDING - PROPOSED PLANS & SECTIONS.DWG (BETA STB BW.STB)

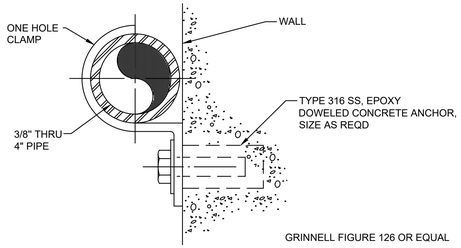

PIPE SUPPORT 416
SCALE: NOT TO SCALE

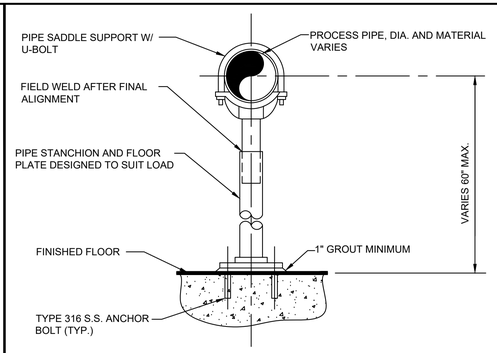

NOTES: 1. PROVIDE HALF-ROUND RIGID INSULATION WAND INSULATION SHIELD FOR INSULATED PIPING.

2. PROVIDE NEOPRENE ISOLATION PAD UNDER SUPPORT FOOT FOR ISOLATED PIPING OR WHEN SUPPORT IS ADJACENT TO MECHANICAL EQUIPMENT.

GRINNELL FIGURE 259 OR EQUAL

FLOOR PIPE SUPPORT 421
SCALE: NOT TO SCALE

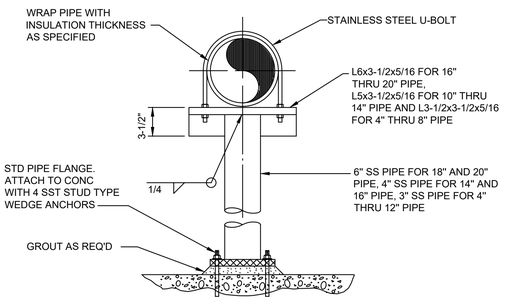

S.S. PIPE SUPPORT (SUBMERGED) 425
SCALE: NOT TO SCALE

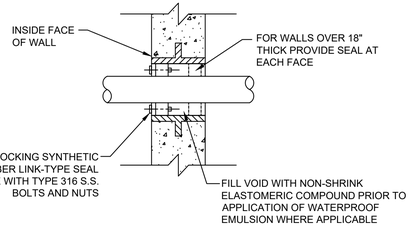

WALL SLEEVE/NEW CONCRETE 411
SCALE: NOT TO SCALE

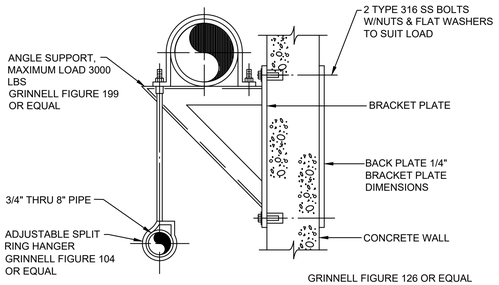

PIPE SUPPORT 417
SCALE: NOT TO SCALE

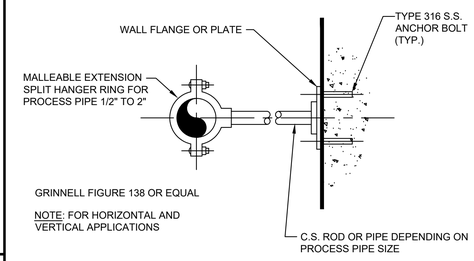

WALL PIPE SUPPORT 422
SCALE: NOT TO SCALE

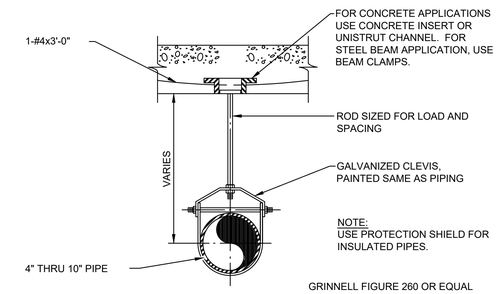

PIPE HANGER 426
SCALE: NOT TO SCALE

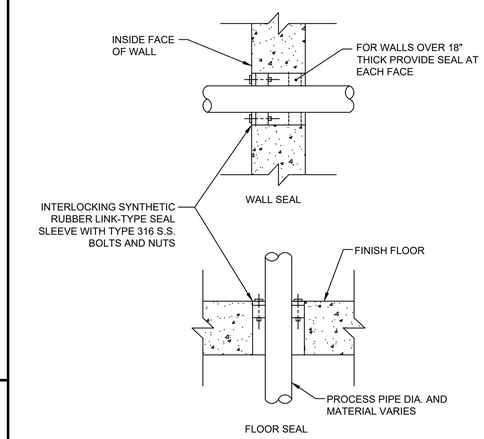

PENETRATION FOR CORED HOLES IN EXISTING WALLS OR FLOOR 410
SCALE: NOT TO SCALE

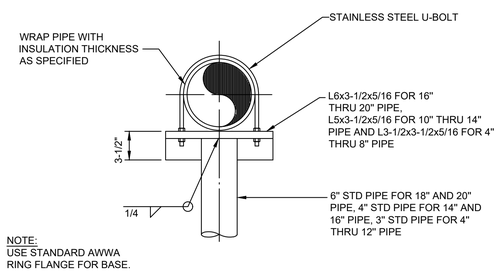

NOTE: USE STANDARD AWWA RING FLANGE FOR BASE.

PIPE SUPPORT 418
SCALE: NOT TO SCALE

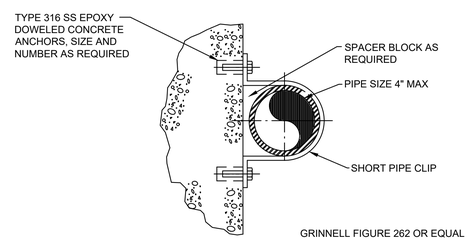

VERTICAL PIPE SUPPORT 423
SCALE: NOT TO SCALE

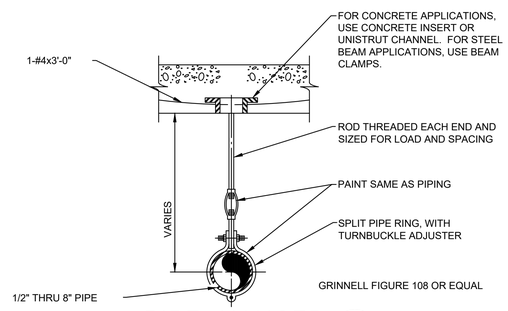

PIPE HANGER 427
SCALE: NOT TO SCALE

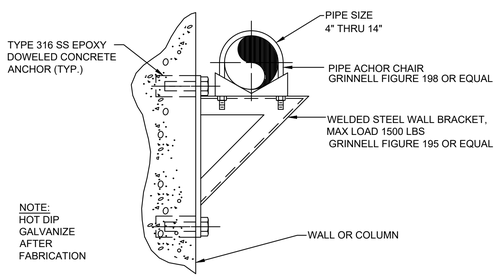

PIPE SUPPORT–MEDIUM 419
SCALE: NOT TO SCALE

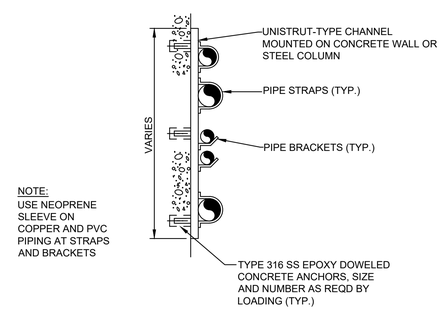

STACKED PIPE WALL SYSTEM 424
SCALE: NOT TO SCALE

PREPARED BY

BETA
www.BETA-Inc.com

REGISTERED PROFESSIONAL

COMMONWEALTH OF MASSACHUSETTS
ROBERT A. DRAKE
CIVIL
No. 41642
REGISTERED PROFESSIONAL ENGINEER
9/30/22

SUBCONSULTANT

PROJECT

Plymouth Airport Wastewater Treatment Facility Improvements

Plymouth, MA

TITLE

Mechanical Details

NO.	REVISIONS	DATE

DRAWN BY:	BM
DESIGNED BY:	MA
CHECKED BY:	RD
ISSUE DATE:	9/30/2022
BETA JOB NO.:	10042

SCALE

NONE

UNLESS OTHERWISE NOTED OR CHANGED BY REPRODUCTION

SHEET NO.

MD-1

9/30/2022 3:05 PM J:\5890 PLYMOUTH AIRPORT WWTF EVALUATION\10042 - WWTF UPGRADE\DESIGN\AUTOCAD\PLAN SET\MECHANICAL DETAILS.DWG (BETA STB BW STB)

GENERAL STRUCTURAL NOTES:

1. STRUCTURAL WORK SHALL CONFORM TO THE REQUIREMENTS OF THE COMMONWEALTH OF MASSACHUSETTS STATE BUILDING CODE, 9TH EDITION.
2. SPECIFICATIONS ARE PART OF THE CONSTRUCTION DOCUMENTS AND MUST BE USED IN CONJUNCTION WITH THE DRAWINGS.
3. VERIFY EXISTING CONDITIONS AND DIMENSIONS PRIOR TO BEGINNING WORK OR FABRICATING MATERIALS. NOTIFY THE ENGINEER OF DISCREPANCIES BEFORE PROCEEDING WITH ANY PHASE OF WORK.
4. THE CONTRACTOR SHALL BE RESPONSIBLE FOR NOTIFYING DIG SAFE PRIOR TO THE START OF ANY EXCAVATION OR SITE WORK.
5. DO NOT SCALE FROM THESE DRAWINGS. REFER TO LABELED DIMENSIONS ONLY.
6. DETAILS LABELED "TYPICAL DETAILS" ON DRAWINGS APPLY TO SITUATIONS OCCURRING ON THE PROJECT THAT ARE THE SAME OR SIMILAR TO THOSE SPECIFICALLY DETAILED. SUCH DETAILS APPLY WHETHER OR NOT DETAILS ARE REFERENCED AT EACH LOCATION. NOTIFY ENGINEER OF CONFLICTS REGARDING APPLICABILITY OF TYPICAL DETAILS.
7. COORDINATE THE WORK OF THESE DRAWINGS WITH OTHER TRADES. DIMENSIONS AND QUANTITIES OF RELATED WORK ARE PROVIDED FOR GENERAL GUIDANCE AND SHALL BE CONFIRMED.
8. DO NOT LOAD SLABS ON GRADE OR SUPPORTED SLAB WITH ERECTION CRANES OR ERECTION EQUIPMENT. THE SLABS HAVE NOT BEEN DESIGNED FOR CRANE LOADS AND WILL REQUIRE AN INCREASE IN THICKNESS AND/OR REINFORCEMENT. CONTRACTOR SHALL OBTAIN ENGINEER'S APPROVAL ON PROPOSED CRANE SUPPORT PLAN FOR SLABS PRIOR TO COMMENCING WORK.
9. DO NOT STORE OR STACK CONSTRUCTION MATERIALS ON POURED OR ERECTED FLOORS/WALLS/ROOFS IN EXCESS OF 80 PERCENT OF LIVE LOAD. GENERAL CONTRACTOR WILL ENSURE THAT ALL SUB-CONTRACTORS ARE INFORMED OF LOADING RESTRICTIONS. AVOID IMPACT WHEN PLACING MATERIALS ON POURED OR ERECTED FLOORS OR ROOFS.
10. OPENINGS IN SLABS AND WALLS LESS THAN 12" MAXIMUM DIMENSION ARE GENERALLY NOT SHOWN ON STRUCTURAL DRAWINGS. OPENINGS SHOWN ON DRAWINGS SHALL NOT BE REVISED WITHOUT PRIOR WRITTEN APPROVAL.
11. THE CONTRACTOR SHALL SHORE, BRACE, SHEETPILE, OR OTHERWISE SUPPORT THE STRUCTURE AS REQUIRED TO MAINTAIN STRUCTURAL INTEGRITY AT ALL TIMES. SHORING DESIGN, IF REQUIRED, SHALL BE DESIGNED, ERECTED, SUPPORTED, BRACED, AND MAINTAINED BY THE CONTRACTOR TO SAFELY SUPPORT ALL DEAD LOADS CARRIED BY THE STRUCTURAL WORK BEING SHORED, AND ANY CONSTRUCTION LIVE LOADS.
12. IF TEMPORARY SHORING IS REQUIRED, NEW STRUCTURAL SYSTEMS SHALL BE COMPLETELY INSTALLED AND CAPABLE OF SUPPORTING DESIGN LOADS BEFORE SHORES ARE REMOVED. SHORES SHALL BE RELEASED GRADUALLY.
13. THE CONTRACT STRUCTURAL DOCUMENTS REPRESENT THE FINISHED STRUCTURES. THE CONTRACTOR IS RESPONSIBLE FOR THE MEANS AND METHODS OF CONSTRUCTION. PROVIDE ALL MEASURES REQUIRED TO PROTECT THE STRUCTURES, WORKMEN, AND OTHER PERSONS DURING CONSTRUCTION, INCLUDING BRACING, TEMPORARY SHORING, BUILDING SHORING, FORMS AND SCAFFOLDING, SHORING OF RETAINING WALLS AND OTHER TEMPORARY SUPPORTS AS REQUIRED. COMPLY WITH APPLICABLE REQUIREMENTS OF OSHA AND OTHER GOVERNING BODIES HAVING JURISDICTION AT THE SITE.
14. BACKFILLING AND COMPACTING ADJACENT TO THE STRUCTURE WALLS SHALL NOT BE PERMITTED UNTIL ALL THE CONCRETE HAS REACHED THE FULL STRUCTURAL CAPACITY.
15. USE OF EXCAVATED MATERIAL SHALL NOT BE PERMITTED FOR USE OF BACKFILLING ADJACENT TO STRUCTURE. BACKFILL SHALL CONSIST OF A CLEAN GRAVEL (SEE SPECIFICATIONS).

SUBMITTALS, TESTING, AND INSPECTIONS:

1. SUBMITTALS AND TESTING SHALL BE AS REQUIRED BY THE MASSACHUSETTS STATE BUILDING CODE AND THESE FOLLOWING REQUIREMENTS.
2. FOR TESTING AGENCY REQUIREMENTS REFER TO SPECIFICATION 01410.
3. THE CONTRACTOR SHALL COORDINATE ALL WORK WITH THE TESTING AGENCY AND THE ENGINEERS OF RECORD ACCORDINGLY.
4. NOTIFY THE GEOTECHNICAL ENGINEER OF RECORD PRIOR TO FOUNDATION EXCAVATION.
5. NOTIFY THE STRUCTURAL ENGINEER OF RECORD PRIOR TO FIRST CONCRETE PLACEMENT.
6. SUBMITTALS INCLUDE BUT NOT LIMITED TO:
   DEWATERING (IF REQ'D)
   BORROW MATERIAL
   CONCRETE MIX DESIGN
   STEEL REINFORCING
   ACCESSORIES
   ALUMINUM
   GRATING, HANDRAILS, AND ANCHOR ROD SYSTEMS
   STRUCTURAL STEEL
7. TESTS/INSPECTIONS INCLUDES BUT NOT LIMITED TO:
   EARTHWORK
   CONCRETE STRENGTH
   REINFORCING STEEL INSTALLATION
   CONCRETE PLACEMENT AND CURING
   STEEL BOLTING
8. THE CONTRACTOR SHALL KEEP COMPLETE AND ORGANIZED RECORDS OF ALL TESTS AND INSPECTIONS AND PROVIDE THEM TO THE ENGINEER SO THAT THE FINAL AFFIDAVIT CAN BE PREPARED. A BINDER SHALL BE MAINTAINED AT THE JOBSITE AT ALL TIMES FOR THE ENGINEER'S INSPECTION.
9. THE CONTRACTOR SHALL NOTIFY THE ENGINEER, IN ADVANCE, BEFORE CONCEALING ANY WORK THAT WILL REQUIRE OBSERVATION NEEDED TO PREPARE THE FINAL AFFIDAVIT.

CONCRETE:

1. CONCRETE WORK SHALL CONFORM TO BUILDING CODE REQUIREMENTS FOR STRUCTURAL CONCRETE (ACI 350) AND SPECIFICATIONS FOR STRUCTURAL CONCRETE FOR BUILDINGS (ACI 301).
2. UNLESS NOTED OTHERWISE, CONCRETE SHALL BE AS FOLLOWS:

		MAX. WATER CEMENT RATIO
FOUNDATIONS:	4000 P.S.I (NORMAL WEIGHT)	0.40
TANK WALLS:	5000 P.S.I. (NORMAL WEIGHT)	0.40
HOUSEKEEPING:	5000 P.S.I. (NORMAL WEIGHT)	0.40

3. CONCRETE EXPOSED TO THE WEATHER SHALL BE AIR ENTRAINED.
4. PROVIDE VAPOR BARRIER UNDER SLABS CAST ON GRADE.
5. CONSTRUCTION JOINTS SHOWN ON THE DRAWINGS ARE MANDATORY.
6. SIZE OF CONCRETE PLACEMENTS, UNLESS NOTED OTHERWISE, SHALL CONFORM TO ACI GUIDELINES AND RECOMMENDATIONS.

REINFORCEMENT:

1. REINFORCEMENT SHALL CONFORM TO BUILDING CODE REQUIREMENTS FOR STRUCTURAL CONCRETE (ACI 350), ACI DETAILING MANUAL (SP-66), CRSI MANUAL OF STANDARD PRACTICE (MSP), AND THE STRUCTURAL WELDING CODE-REINFORCING STEEL (AWS D1).
2. STEEL REINFORCEMENT SHALL CONFORM TO ASTM A615 GRADE 60.
3. WELDED WIRE FABRIC SHALL CONFORM TO ASTM A185.
4. PROVIDE SUPPLEMENTAL BARS AND ACCESSORIES AS REQUIRED TO HOLD REINFORCEMENT SECURELY IN POSITION.
5. MINIMUM CONCRETE PROTECTIVE COVER, UNLESS NOTED OTHERWISE, SHALL BE AS FOLLOWS:

FOOTINGS & BASE SLAB – BOTTOMS:	3 INCHES
FOOTINGS & BASE SLAB – SIDES AND TOPS:	2 INCHES
WALLS:	2 INCHES
SLABS ON GRADE:	2 INCH TOP/3 BOTTOM

6. ALL CONTINUOUS REINFORCEMENT SHALL BE EXTENDED AROUND CORNERS AND LAPPED AT NECESSARY SPLICES OR HOOKED AT DISCONTINUOUS ENDS.
7. LAPS SHALL BE CLASS B TENSION LAP SPLICES, UNLESS NOTED OTHERWISE.
8. REINFORCEMENT SHALL BE CONTINUOUS THROUGH CONSTRUCTION JOINTS.
9. WELDED WIRE FABRIC SHALL LAP 8" OR 1-1/2 SPACES, WHICHEVER IS LARGER, AND SHALL BE WIRED TOGETHER.

FOUNDATIONS:

1. SEE THE SPECIFICATIONS FOR ALL RELATED CONSTRUCTION REQUIREMENTS.
2. ALL UNSUITABLE MATERIAL WITHIN FOUNDATIONS AND SLABS SHALL BE REMOVED AND REPLACED AS DIRECTED BY THE ENGINEER.
3. FOUNDATIONS MAY BE ALTERED TO SUIT EXISTING CONDITIONS AS DIRECTED BY THE ENGINEER.
4. PROVIDE TEMPORARY OR PERMANENT SUPPORTS AS REQUIRED TO PROTECT EXISTING AND NEWLY COMPLETED STRUCTURES AND UTILITIES.
5. CARRY OUT CONTINUOUS CONTROL OF SURFACE AND SUBSURFACE WATER DURING CONSTRUCTION SUCH THAT FOUNDATION WORK IS DONE IN DRY AND ON UNDISTURBED SUB-GRADE MATERIAL.
6. NO FOUNDATION CONCRETE SHALL BE PLACED ON FROZEN SUB-GRADE MATERIAL.
7. SLABS ON GRADE AND TANKS SHALL BE PLACED ON 12" OF COMPACTED STRUCTURAL FILL.
8. COMPACTED STRUCTURAL FILL SHALL BE IN ACCORDANCE WITH SPECIFICATION SECTION 02215.
9. STRUCTURAL FILL SHALL BE PLACED ON FIRM MATERIAL, FREE OF STANDING WATER & THOROUGHLY COMPACTED IN LAYERS NOT EXCEEDING 12 IN. IN DEPTH.
10. COMPACTION OF STRUCTURAL FILL AND ANY ADJOINING EMBANKMENT MATERIAL SHALL BE DONE SIMULTANEOUSLY SO THAT THE RESPECTIVE MATERIALS WILL BE CONFINED SUBSTANTIALLY TO THE INDICATED LINES.
11. VERTICAL WALL INSULATION TO HAVE A MINIMUM THICKNESS OF 2" AND CONFORM TO ASTM C578 TYPE II WITH MINIMUM R-VALUE OF 4.5.

SECTION AND DETAIL DESIGNATIONS:

SECTION CUT SYMBOL:

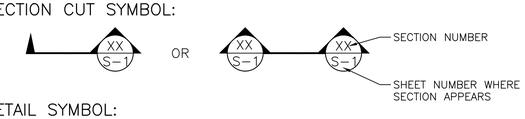

DETAIL SYMBOL:

STAINLESS STEEL:

1. STRUCTURAL STEEL SHALL BE DETAILED IN ACCORDANCE WITH "DG27: STRUCTURAL STAINLESS STEEL" (AISC) AND, WHERE REQUIRED, DESIGNED IN ACCORDANCE WITH THE CITED REFERENCES.

   STRUCTURAL STAINLESS STEEL SHALL BE NEW STEEL CONFORMING TO THE FOLLOWING:

BARS & SHAPES:	ASTM A276 TYPE 316 GRADE 50
NUTS:	ASTM F594 TYPE 316
BOLTS & THREADED RODS	ASTM F593 TYPE 316 GRADE 65
WIRE ROPE	ASTM A492 TYPE 316
EYE BOLTS	ASTM A193 TYPE 304 GRADE B8M

3. PROVIDE TEMPORARY ERECTION BRACING AND SUPPORTS TO HOLD STRUCTURAL STEEL FRAMING SECURELY IN POSITION. SUCH TEMPORARY BRACING AND SUPPORTS SHALL NOT BE REMOVED UNTIL CONCRETE HAS ATTAINED 75% OF SPECIFIED CONCRETE STRENGTH.
4. FIELD CUTTING OF STRUCTURAL STEEL OR ANY FIELD MODIFICATIONS OF STRUCTURAL STEEL SHALL NOT BE MADE WITHOUT PRIOR WRITTEN APPROVAL.

ALUMINUM:

1. UNLESS OTHERWISE NOTED, STRUCTURAL ALUMINUM TO CONFORM TO ALLOY 6061-T6. DETAIL AND FABRICATE IN CONFORMANCE WITH THE 2015 ALUMINUM DESIGN MANUAL.
2. ALL BENT PLATES SHALL CONFORM TO ALLOY 5052.

METAL GRATING NOTES:

1. GRATING AND SUPPORTS SHALL BE ALL ALUMINUM CONSTRUCTION UNLESS OTHERWISE NOTED. GRATING SHALL BE ALUMINUM ALLOY 6061-T6.
2. FASTENERS, ANCHORS, BOLTS, NUTS AND WASHERS FOR GRATING, COVER PLATES AND SUPPORTS SHALL BE TYPE 316 STAINLESS STEEL.
3. GRATING PANEL LAYOUT SHALL PROVIDE FOR THE REMOVAL OF GRATING AROUND PIPE AND OTHER PENETRATIONS, AS REQUIRED.
4. BAND ALL GRATING ALONG EDGES AND AROUND OPENINGS WITH CONTINUOUS BAR SAME DEPTH & THICKNESS AS BEARING BARS.
5. ALL GRATING IS TO BE SECURELY FASTENED TO SUPPORTS, UNLESS OTHERWISE NOTED.

LIST OF ABBREVIATIONS:

ARCH.	– ARCHITECTURAL	JT.	– JOINT
ADD'L	– ADDITIONAL	K.S.I.	– KIPS PER SQUARE INCH
APPROX.	– APPROXIMATE	LG.	– LONG
BRG.	– BEARING	(LLH)	– LONG LEG HORIZONTAL
B.O.	– BOTTOM OF	(LLV)	– LONG LEG VERTICAL
C-C	– CENTER TO CENTER	LOC.'S	– LOCATIONS
℄	– CENTERLINE	MAX.	– MAXIMUM
C.I.P.	– CAST IN PLACE	MIN.	– MINIMUM
CONC.	– CONCRETE	MISC.	– MISCELLANEOUS
CONST.	– CONSTRUCTION	N.F.	– NEAR FACE
CONT.	– CONTINUOUS	N.S.	– NEAR SIDE
C.Y.	– CUBIC YARD	N.T.S.	– NOT TO SCALE
d	– DEEP	NO.	– NUMBER
DET.	– DETAIL	O.C.	– ON CENTER
DTL.	– DETAIL	O.D.	– OUTSIDE DIAMETER
DIA.	– DIAMETER	O.F.	– OUTSIDE FACE
DWG.	– DRAWING	PERIM.	– PERIMETER
EA.	– EACH	⅊	– PLATE
EL.	– ELEVATION	PVC	– POLYVINYL CHLORIDE
ELEV.	– ELEVATION	P.S.F.	– POUNDS PER SQUARE FOOT
EMBED.	– EMBEDMENT	P.S.I.	– POUNDS PER SQUARE INCH
E.F.	– EACH FACE	RAD.	– RADIUS
E.S.	– EACH SIDE	REINF.	– REINFORCING
E.W.	– EACH WAY	REQ'D	– REQUIRED
EXIST.	– EXISTING	SECT.	– SECTION
EXP.	– EXPANSION	SCH.	– SCHEDULE
FIN.	– FINISH	S.F.	– SQUARE FOOT
F.O.	– FACE OF	SHT.	– SHEET
FT.	– FEET/FOOT	SIM.	– SIMILAR
FTG.	– FOOTING	SP.	– SPACES
GA.	– GAUGE	S.S.	– STAINLESS STEEL
GALV.	– GALVANIZED	STD.	– STANDARD
GC	– GENERAL CONTRACTOR	STL.	– STEEL
h	– HIGH	SYM.	– SYMMETRIC
HORIZ.	– HORIZONTAL	t	– THICK
H.A.	– HIGH POINT	T&B	– TOP AND BOTTOM
I.F.	– INSIDE FACE	T.O.	– TOP OF
IN.	– INCH	TO.S.	– TOP OF SLAB
I.D.	– INSIDE DIAMETER	T.O.W.	– TOP OF WALL
INFO.	– INFORMATION	TYP.	– TYPICAL
INV.	– INVERT	U.N.O.	– UNLESS NOTED OTHERWISE
VERT.	– VERTICAL		
W.W.F.	– WELDED WIRE FABRIC		
w	– WIDE		
w/	– WITH		
ø	– DIAMETER		

PREPARED BY

BETA
www.BETA-Inc.com

REGISTERED PROFESSIONAL

COMMONWEALTH OF MASSACHUSETTS
TODD M. WARZECKI
CIVIL ENGINEER
No. 47367
REGISTERED PROFESSIONAL ENGINEER

SUBCONSULTANT

PROJECT

Plymouth Airport Wastewater Treatment Facility Improvements

Plymouth, MA

TITLE

STRUCTURAL NOTES

NO.	REVISIONS	DATE

DRAWN BY:	JR
DESIGNED BY:	JR
CHECKED BY:	TW
ISSUE DATE:	9/30/2022
BETA JOB NO.:	10042

SCALE

AS SHOWN

UNLESS OTHERWISE NOTED OR CHANGED BY REPRODUCTION

SHEET NO.

S-1

9/30/2022 3:34 PM J:\15990 PLYMOUTH AIRPORT WWTF EVALUATION\10042 - WWTF UPGRADE\DESIGN\AUTOCAD\PLAN SET\10042_SR(1).DWG (BETA STB BW.STB)

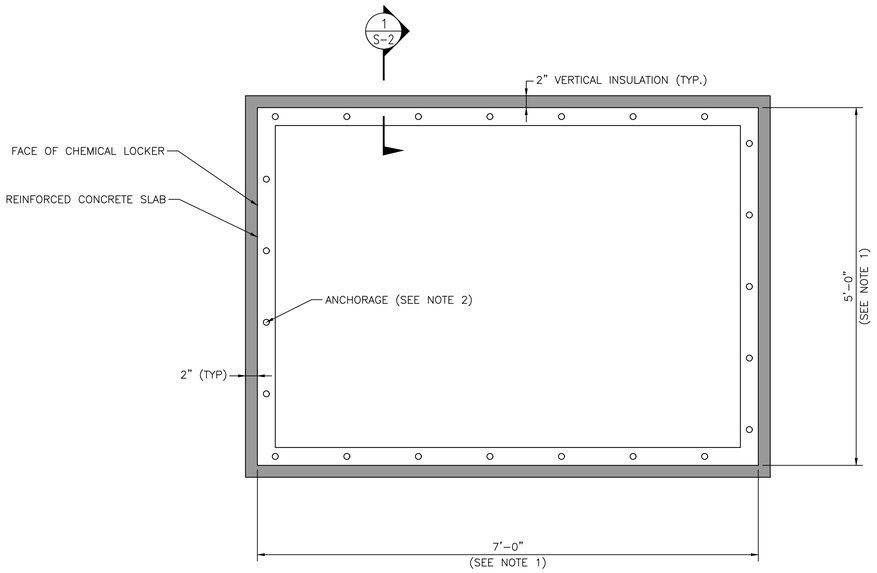

CHEMICAL LOCKER FROST-PROTECTED SHALLOW FOUNDATION PLAN

SCALE: 1" = 1'-0"

SHALLOW FOUNDATION NOTES:

1. BUILDING AND FOUNDATION SIZE SHALL BE COORDINATED WITH BUILDING MANUFACTURER PRIOR TO CONSTRUCTION.
2. ANCHORAGE SHALL BE LOCATED IN THE BUILDING INTERIOR AND COORDINATED WITH THE BUILDING MANUFACTURER.
3. VERIFY EXISTING CONDITIONS AND DIMENSIONS PRIOR TO BEGINNING WORK OR FABRICATING MATERIALS. NOTIFY THE ENGINEER OF DISCREPANCIES BEFORE PROCEEDING WITH ANY PHASE OF WORK.
4. THE CONTRACTOR SHALL BE RESPONSIBLE FOR NOTIFYING DIG SAFE PRIOR TO THE START OF ANY EXCAVATION OR SITE WORK.
5. COORDINATE THE WORK OF THESE DRAWINGS WITH OTHER TRADES. DIMENSIONS AND QUANTITIES OF RELATED WORK ARE PROVIDED FOR GENERAL GUIDANCE AND SHALL BE CONFIRMED.

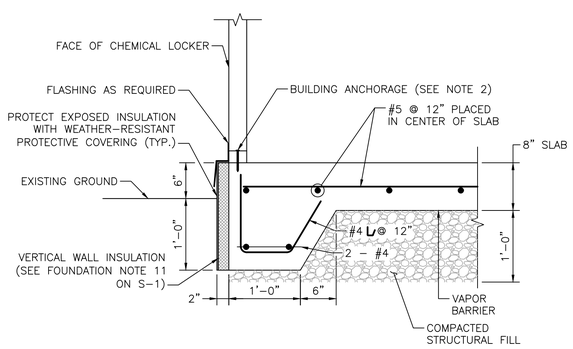

SECTION 1

SCALE: 1" = 1'-0"

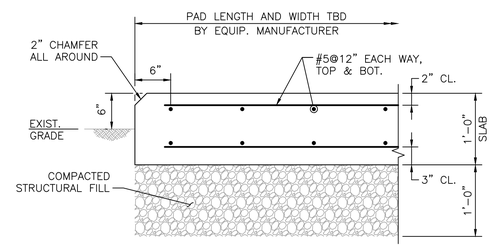

GENERATOR AND AIR HANDLING UNIT PAD DETAIL

SCALE: 1" = 1'-0"

PREPARED BY

BETA
www.BETA-Inc.com

REGISTERED PROFESSIONAL

COMMONWEALTH OF MASSACHUSETTS
TODD M. WARZECKI
CIVIL ENGINEER
No. 47367
REGISTERED PROFESSIONAL ENGINEER

SUBCONSULTANT

PROJECT

Plymouth Airport Wastewater Treatment Facility Improvements

Plymouth, MA

TITLE

FROST-PROTECTED SHALLOW FOUNDATION & GENERATOR PAD

NO.	REVISIONS	DATE

DRAWN BY:	JR
DESIGNED BY:	JR
CHECKED BY:	TW
ISSUE DATE:	9/30/2022
BETA JOB NO.:	10042

SCALE

AS SHOWN

UNLESS OTHERWISE NOTED OR CHANGED BY REPRODUCTION

SHEET NO.

S-2

9/30/2022 3:34 PM J:\15890 PLYMOUTH AIRPORT WWTF EVALUATION\10042 - WWTF UPGRADE\DESIGN\AUTOCAD\PLAN SET\10042_SR(2).DWG (BETA STB BW.STB)

NOTES:

1. INJECTABLE ADHESIVE ANCHORS TO BE AN INJECTABLE EPOXY MORTAR WITH A MAXIMUM EMBEDMENT OF 9 INCHES AND SHEAR CAPACITY OF 5 KIPS (EA.).
2. ANCHORS TO BE SUBMITTED FOR APPROVAL & BE INSTALLED PER MANUFACTURER'S RECOMMENDATIONS.
3. CONTRACTOR TO FIELD VERIFY EXISTING STEEL REINFORCING LOCATION AND SPACING PRIOR TO DRILLING ADHESIVE ANCHORS. DRILLING THROUGH EXISTING STEEL REINFORCING IS PROHIBITED.
4. THE SURFACE OF THE EXISTING CONCRETE WALL & SLAB SHALL BE BLAST CLEANED, ROUGHENED, WETTER WITH CLEAN WATER, AND THEN FLUSHED WITH A MORTAR COMPOUND OF EQUAL PARTS OF THE CEMENT AND SAND SPECIFIED FOR THE NEW CONCRETE. BEFORE NEW CONCRETE IS PLACED ADJACENT THERETO, NEW CONCRETE SHALL BE PLACED BEFORE MORTAR HAS TAKEN INITIAL SET.

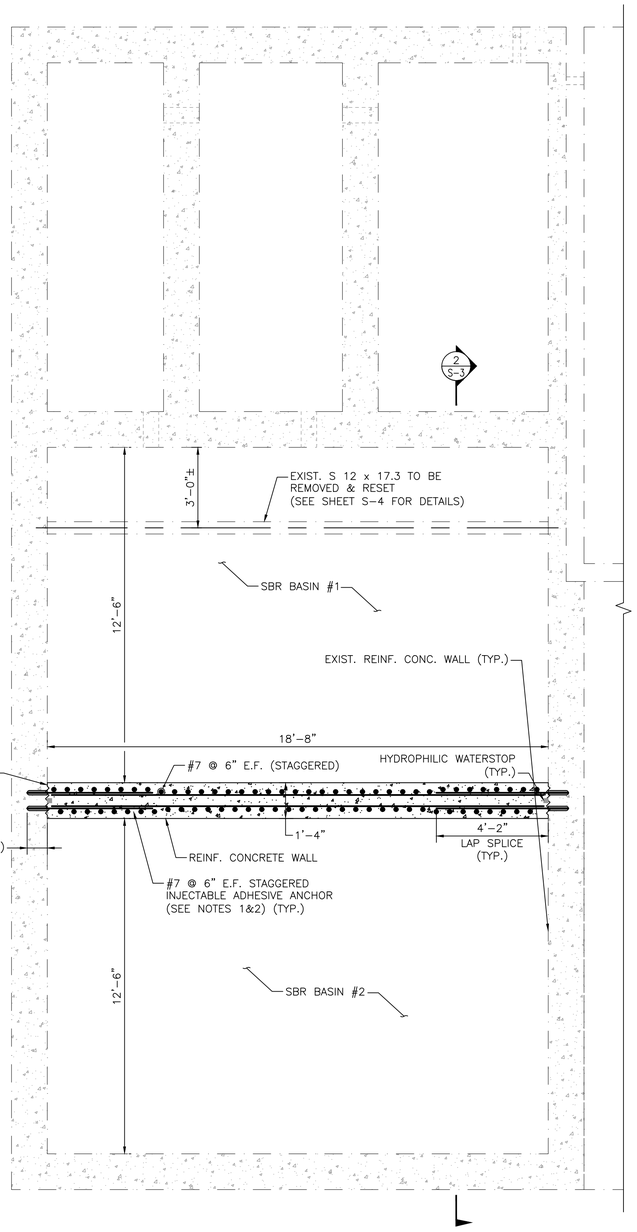

NOTE: GRATING AND SUPPORTS NOT SHOWN FOR CLARITY. SEE SHEET S-4.

SBR BASIN PLAN

SCALE: ⅜" = 1'-0"

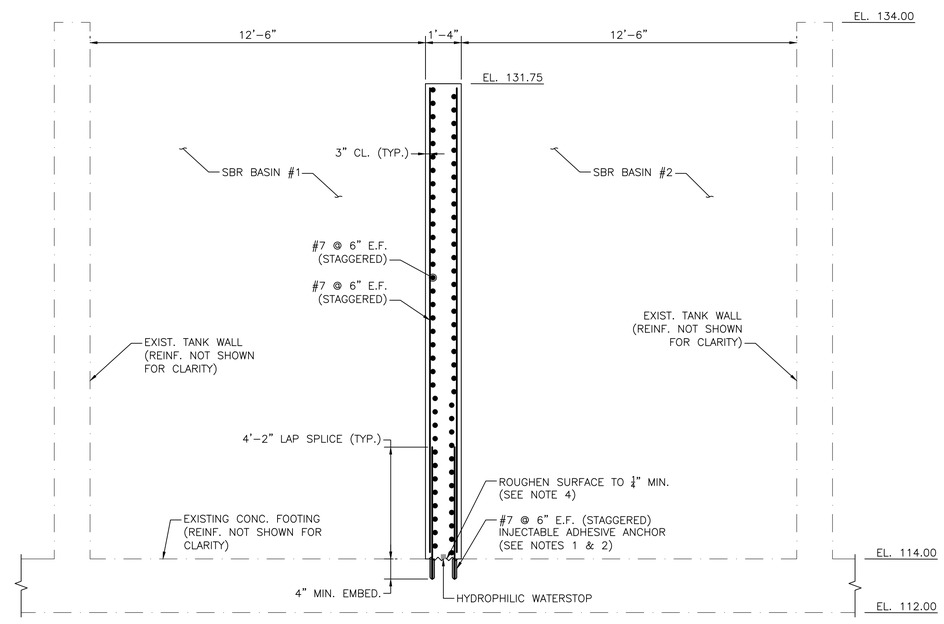

SECTION 2

SCALE: ⅜" = 1'-0"

PREPARED BY

BETA
www.BETA-Inc.com

REGISTERED PROFESSIONAL

COMMONWEALTH OF MASSACHUSETTS
TODD M. WARZECKI
CIVIL ENGINEER
No. 47367
REGISTERED PROFESSIONAL ENGINEER

SUBCONSULTANT

PROJECT

Plymouth Airport Wastewater Treatment Facility Improvements

Plymouth, MA

TITLE

SBR BASIN BISECTING WALL PLAN & SECTION

NO.	REVISIONS	DATE

DRAWN BY:	JR
DESIGNED BY:	JR
CHECKED BY:	TW
ISSUE DATE:	9/30/2022
BETA JOB NO.:	10042

SCALE

AS SHOWN

UNLESS OTHERWISE NOTED OR CHANGED BY REPRODUCTION

SHEET NO.

S-3

9/30/2022 3:34 PM J:\15890 PLYMOUTH AIRPORT WWTF EVALUATION\10042 - WWTF UPGRADE\DESIGN\AUTOCAD\PLAN SET\10042_SR(3).DWG (BETA STB BW.STB)

NOTES:

1. DETAIL B SHOWN SQUARE, SKEWED SIMILAR TO SECTION 3.
2. ALUMINUM ANGLES TO BE USED IN SQUARE CONNECTIONS. ALUMINUM BENT PLATES TO BE USED IN SKEWED CONNECTIONS.
3. NEW ALUMINUM BEAMS SHOWN, EXISTING BEAMS SIMILAR.
4. CONTRACTOR TO FIELD VERIFY LOCATION OF EXISTING BEAM BEFORE FABRICATION OF NEW ALUMINUM MEMBERS & CONNECTIONS.

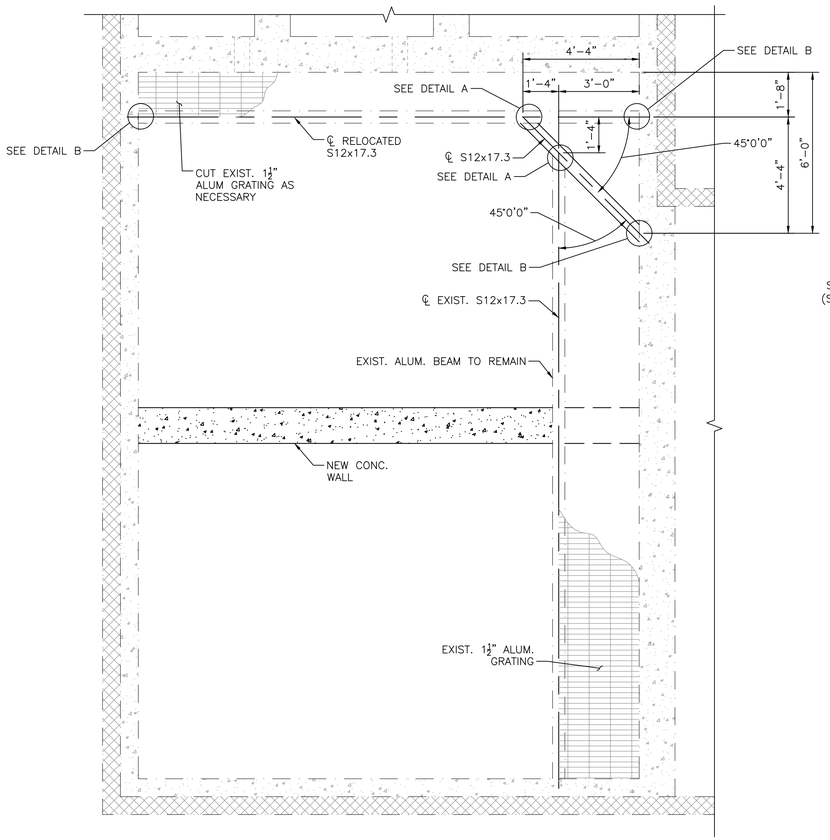

GRATING SUPPORT PLAN

SCALE: ⅜" = 1'-0"

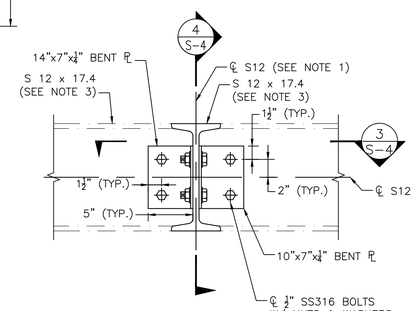

DETAIL A

SCALE: 1½" = 1'-0"

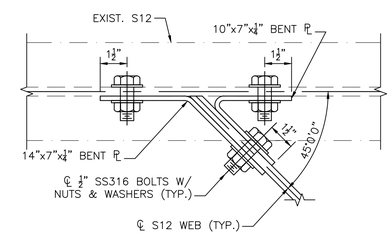

SECTION 3

SCALE: 3"=1'-0"

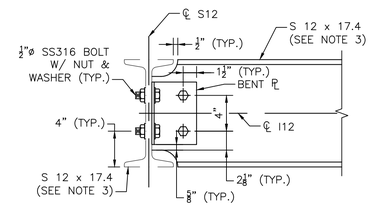

SECTION 4

SCALE: 1½" = 1'-0"

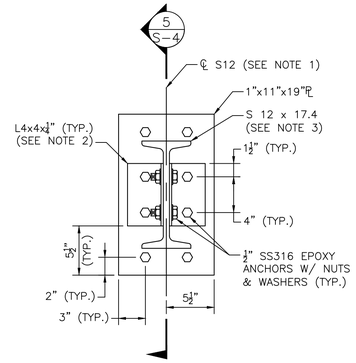

DETAIL B

SCALE: 1½" = 1'-0"

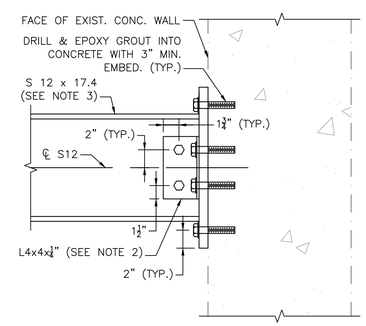

SECTION 5

SCALE: 1½" = 1'-0"

PREPARED BY

BETA
www.BETA-Inc.com

REGISTERED PROFESSIONAL

COMMONWEALTH OF MASSACHUSETTS
TODD M. WARZECKI
CIVIL ENGINEER
No. 47367
REGISTERED PROFESSIONAL ENGINEER

SUBCONSULTANT

PROJECT

Plymouth Airport Wastewater Treatment Facility Improvements

Plymouth, MA

TITLE

SBR BASIN WALKWAY PLAN & DETAILS

NO.	REVISIONS	DATE

DRAWN BY:	JR
DESIGNED BY:	JR
CHECKED BY:	TW
ISSUE DATE:	9/30/2022
BETA JOB NO.:	10042

SCALE

AS SHOWN

UNLESS OTHERWISE NOTED OR CHANGED BY REPRODUCTION

SHEET NO.

S-4

9/30/2022 3:35 PM J:\5890 PLYMOUTH AIRPORT WWTF EVALUATION\10042 - WWTF UPGRADE\DESIGN\AUTOCAD\PLAN SET\10042_SR(4).DWG (BETA STB BW.STB)

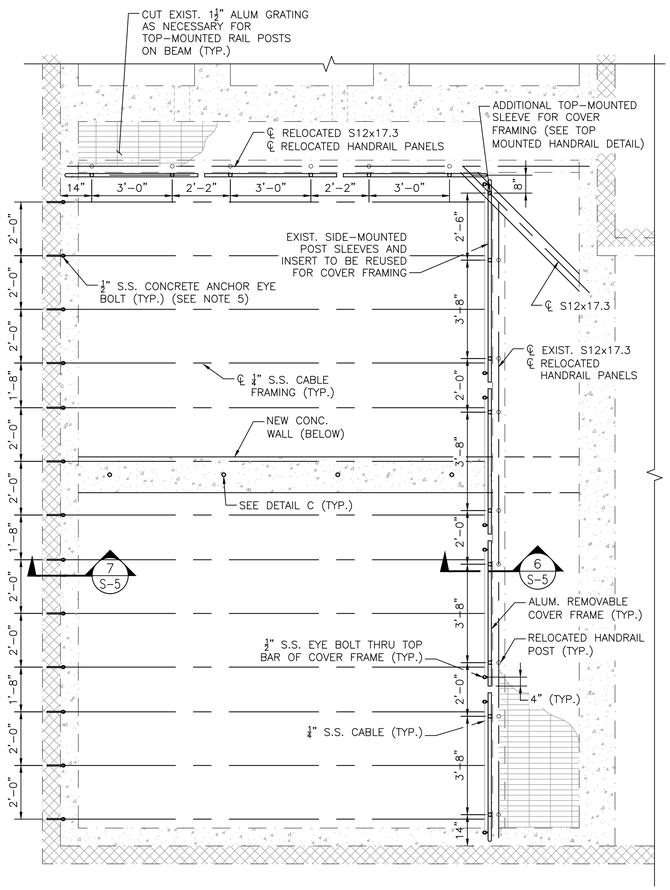

BASIN COVER FRAMING PLAN

SCALE: ⅛" = 1'-0"

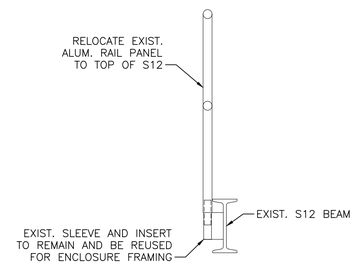

[EXISTING]

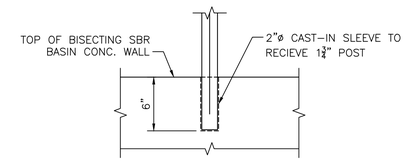

DETAIL C

SCALE: 1½" = 1'-0"

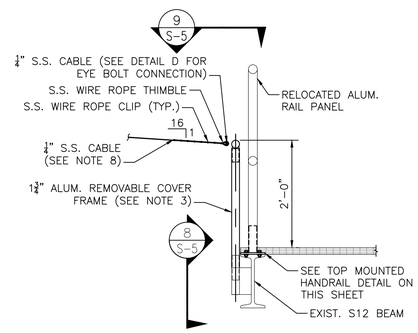

[NEW]

SECTION 6

SCALE: ¾" = 1'-0"

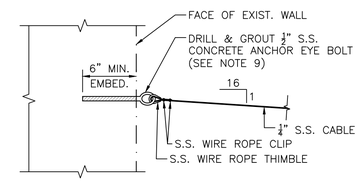

SECTION 7

SCALE: 1½" = 1'-0"

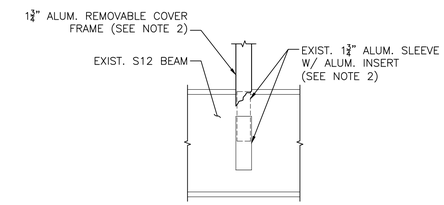

SECTION 8

SCALE: 1½" = 1'-0"

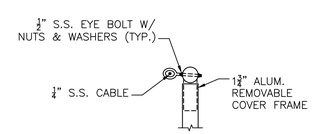

DETAIL D

SCALE: 1½" = 1'-0"

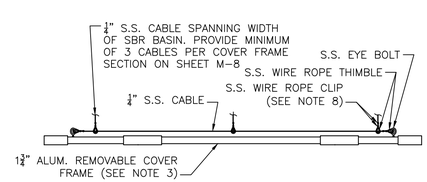

[RELOCATED HANDRAIL NOT SHOWN FOR CLARITY]

SECTION 9

SCALE: ¾" = 1'-0"

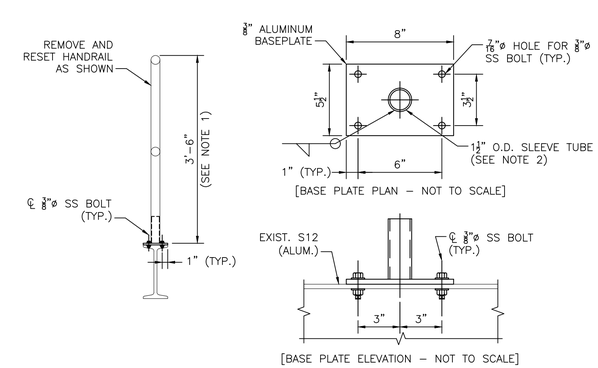

TOP MOUNTED HANDRAIL DETAIL – S-BEAM

SCALE: ¾" = 1'-0"

NOTES:

1. CUT BOTTOM OF EXISTING HANDRAIL POST AS NECESSARY TO MATCH HEIGHT SHOWN IN TOP-MOUNTED HANDRAIL DETAIL.
2. CONTRACTOR TO CONFIRM EXIST. HANDRAIL AND SLEEVE SIZES PRIOR TO ORDERING ENCLOSURE FRAMING COMPONENTS.
3. SEE MECHANICAL SHEET M-8 FOR ADDITIONAL BASIN COVER FRAME DETAILS.
4. ALL COVER FRAMING COMPONENTS SHALL BE IN ACCORDANCE WITH ASTM B221.
5. LOCATION OF S.S. CONCRETE ANCHOR EYE BOLTS TO BE VERIFIED BY CONTRACTOR AND REMOVABLE COVER FRAME MANUFACTURER.
6. CLEAR 40 ML HIGH DENSITY VINYL ENCLOSURE NOT SHOWN FOR CLARITY. SEE MECHANICAL SHEET M-8.
7. ALL STAINLESS STEEL FASTENERS AND CABLES SHALL BE TYPE 316. STAINLESS STEEL EYE BOLTS SHALL BE TYPE 304.
8. PROVIDE SUFFICIENT EXCESS LENGTH OF CABLE BEYOND ROPE CLIP FOR ADJUSTMENT.
9. INJECTABLE ADHESIVE ANCHORS TO BE AN INJECTABLE EPOXY MORTAR WITH A MAXIMUM EMBEDMENT OF 9 INCHES AND SHEAR CAPACITY OF 5 KIPS (EA.).

PREPARED BY

BETA
www.BETA-Inc.com

REGISTERED PROFESSIONAL

COMMONWEALTH OF MASSACHUSETTS
TODD M. WARZECKI
CIVIL ENGINEER
No. 47367
REGISTERED PROFESSIONAL ENGINEER

SUBCONSULTANT

PROJECT

Plymouth Airport Wastewater Treatment Facility Improvements

Plymouth, MA

TITLE

SBR BASIN ENCLOSURE PLAN & DETAILS

NO.	REVISIONS	DATE

DRAWN BY:	JR
DESIGNED BY:	JR
CHECKED BY:	TW
ISSUE DATE:	9/30/2022
BETA JOB NO.:	10042

SCALE

AS SHOWN

UNLESS OTHERWISE NOTED OR CHANGED BY REPRODUCTION

SHEET NO.

S-5

9/30/2022 3:35 PM J:\5890 PLYMOUTH AIRPORT WWTF EVALUATION\10042 - WWTF UPGRADE\DESIGN\AUTOCAD\PLAN SET\10042_SR(5).DWG (BETA STB BW.STB)

GENERAL NOTES

1. HVAC WORK IS INDICATED DIAGRAMMATICALLY. EXACT LOCATIONS OF ALL COMPONENTS ARE TO BE DETERMINED IN THE FIELD AND BY THE ACTUAL BUILDING CONDITIONS. EXISTING DUCTS, PIPING OR EQUIPMENT INTERFERING WITH OTHER INSTALLATIONS SHALL BE RELOCATED AS REQUIRED AT NO ADDITIONAL COST TO THE OWNER. EXACT LOCATIONS MUST HAVE THE APPROVAL OF THE ARCHITECT.
2. ALL WORK SHALL BE COORDINATED WITH ALL OTHER TRADES BEFORE ANY INSTALLATION IS MADE.
3. ALL EQUIPMENT SHALL BE INSTALLED IN ACCORDANCE WITH STATE CODES, MANUFACTURER'S APPROVED PUBLISHED LITERATURE, AND AUTHORITIES HAVING JURISDICTION.
4. INSTALLATION OF EQUIPMENT SHALL PERMIT ACCESSIBILITY FOR SERVICE AND/ OR REPLACEMENT.
5. ALL CEILING MOUNTED EQUIPMENT SHALL BE INSTALLED IN SUCH A WAY THAT LIGHTS, PIPING, AND DUCTWORK DO NOT BLOCK ACCESS TO UNITS AND RELATED ACCESSORIES.
6. HVAC CONTRACTOR SHALL COORDINATE ALL WALL, CEILING, FLOOR, ROOF AND BEAM PENETRATIONS WITH ARCHITECT AND STRUCTURAL ENGINEER.
7. ALL DUCT SIZES SHOWN ARE NET INSIDE CLEAR DIMENSIONS.
8. PROVIDE VOLUME DAMPERS AT EVERY MAIN BRANCH TAKE-OFF AND AS INDICATED AND IN SUCH OTHER LOCATIONS WHERE REQUIRED TO PROPERLY BALANCE THE SYSTEM. DO NOT INSTALL VOLUME DAMPERS IN NECKS OF DIFFUSERS OR AT DISCHARGE OR INLET GRILLES IN DUCTWORK.
9. PROVIDE INSTRUMENT TEST HOLES WITH CAPS IN AIR DISTRIBUTION SYSTEMS AS REQUIRED TO BALANCE SYSTEM.
10. HVAC CONTRACTOR SHALL BE RESPONSIBLE FOR ALL SHEETMETAL TRANSITIONS AT AIR TERMINAL UNITS, FANS, COILS, AND OTHER SIMILAR HVAC EQUIPMENT.
11. ALL OPEN ENDED DUCTS IN THE CEILING PLENUM SHALL BE UNOBSTRUCTED FOR A MINIMUM DISTANCE OF 24" FROM THE OPENING TO ALLOW FREE AIR FLOW AND SHALL HAVE 3/4" WIRE MESH SCREENING.
12. ALL MISCELLANEOUS STRUCTURAL SUPPORTS REQUIRED FOR HVAC EQUIPMENT INSTALLATION SHALL BE PROVIDED BY HVAC SUBCONTRACTOR.
13. EXACT LOCATION OF CEILING DIFFUSERS, GRILLES AND REGISTERS TO BE DETERMINED BY ARCHITECTURAL REFLECTED CEILING PLAN.
14. INSTALL ALL PIPING BELOW DUCTWORK UNLESS CLEARANCE CONDITION REQUIRES PIPING TO BE ABOVE.
15. EXACT ELEVATION FOR SIDE WALL DIFFUSERS, REGISTERS AND GRILLES SHALL BE APPROVED BY THE ARCHITECT BEFORE INSTALLATION.
16. UNLESS OTHERWISE NOTED, ALL PIPING RUNOUTS SHALL BE 3/4"
17. ALL EXPOSED EQUIPMENT (REGISTERS, UNIT HEATERS, ETC..) SHALL HAVE COLORS SELECTED BY THE ARCHITECT, UNLESS NOTED OTHERWISE.
18. HVAC SUBCONTRACTOR SHALL BLANK OFF AND INSULATE ALL UNUSED LOUVER AREA.
19. PITCH AIR INTAKE PLENUMS AND PROVIDE DRAIN TO NEAREST FLOOR DRAIN.
20. ALL REGISTERS, GRILLES AND DIFFUSERS LOCATED IN WALLS NEAR FLOOR SHALL BE HEAVY-DUTY TYPE DESIGNED TO WITHSTAND RUGGED IMPACT. REFER TO SCHEDULE. THE SECTION OF DUCTWORK BEHIND THE AIR DEVICE SHALL BE PAINTED FLAT BLACK.
21. EXACT LOCATION OF THERMOSTAT TO BE COORDINATED WITH FINAL LOCATION OF WALL MOUNTED ARCHITECTURAL AND ELECTRICAL EQUIPMENT.
22. PROVIDE FLEXIBLE CONNECTOR ON INTAKES AND DISCHARGES OF ALL AIR HANDLING UNITS.
23. ROOF OPENINGS SHALL BE SIZED FROM APPROVED SHOP DRAWINGS.
24. ALL DAMPER MOTORS SHALL BE 24 VOLT.

ABBREVIATIONS

ACD	AUTOMATIC CONTROL DAMPER
AD	ACCESS DOOR
AFF	ABOVE FINISHED FLOOR
AHAP	AS HIGH AS POSSIBLE
AP	ACCESS PANEL
ARCH	ARCHITECT
ATC	AUTOMATIC TEMPERATURE CONTROL
BDD	BACKDRAFT DAMPER
BTU	BRITISH THERMAL UNIT
BTUH	BRITISH THERMAL UNIT PER HOUR
BOD	BOTTOM OF DUCT
CAP	CAPACITY
CD	CEILING DIFFUSER
CFM	CUBIC FEET PER MINUTE
CO	CLEANOUT
CONT	CONTROLLER
CP	CUT AND CAP
DIA	DIAMETER
DB	DRY BULB TEMPERATURE
DC	DUST COLLECTOR
DDC	DIRECT DIGITAL CONTROL
DN	DOWN
DWG	DRAWING
DX	DIRECT EXPANSION COOLING
EA	EXHAUST AIR
EAT	ENTERING AIR TEMPERATURE
EBB	ELECTRIC BASEBOARD RADIATION
ECH	ELECTRIC CABINET HEATER
ECON	AIR-SIDE ECONOMIZER
EF	EXHAUST FAN
EFF	EFFICIENCY
ELV	ELEVATION
ER	EXHAUST REGISTER
ESP	EXTERNAL STATIC PRESSURE
ETR	EXISTING TO REMAIN
EWT	ENTERING WATER TEMPERATURE
EXH	EXHAUST
FA	FREE AREA
FD	FIRE DAMPER
FLA	FULL LOAD AMPS
FOB	FLAT ON BOTTOM
FOT	FLAT ON TOP
FPI	FINS PER INCH
FPM	FEET PER MINUTE
FT	FEET
FTR	FINNED TUBE RADIATION
GAL	GALLONS
GALV	GALVANIZED
GC	GENERAL CONTRACTOR
GF	GLYCOL FEED
GPM	GALLONS PER MINUTE
HP	HORSEPOWER
HVAC	HEATING, VENTILATING AND AIR CONDITIONING
HGRH	HOT GAS REHEAT
HW	HOT WATER
HZ	HERTZ
IN	INCHES
KE	KITCHEN EXHAUST
KW	KILOWATTS
LAT	LEAVING AIR TEMPERATURE
LD	LINEAR DIFFUSER
LF	LINEAR FEET
LWT	LEAVING WATER TEMPERATURE
MBH	THOUSANDS OF BTU'S PER HOUR
MCC	MOTOR CONTROL CENTER
NC	NORMALLY CLOSED
NIC	NOT IN CONTRACT
NO	NORMALLY OPEN
NTS	NOT TO SCALE
OA	OUTSIDE AIR
OAT	OUTSIDE AIR TEMPERATURE
OBD	OPPOSED BLADE DAMPER
OD	OUTSIDE DIAMETER
OED	OPEN ENDED DUCT
POS	PROVIDED UNDER OTHER SECTIONS
PSI	POUNDS PER SQUARE INCH (GAUGE)
PD	PRESSURE DROP
PRV	PRESSURE REDUCING VALVE
PG	PROPYLENE GLYCOL
R	RETURN
RA	RETURN AIR
RB	REBALANCE
RF	RETURN/EXHAUST FAN
RG	RETURN GRILLE
RM	ROOM
RPM	REVOLUTIONS PER MINUTE
RR	RETURN REGISTER
S	SUPPLY
SA	SUPPLY AIR
SAT	SUPPLY AIR TEMPERATURE
SF	SQUARE FEET, SUPPLY FAN
SP	STATIC PRESSURE
SR	SUPPLY REGISTER
SS	STAINLESS STEEL
STL	STEEL
TYP	TYPICAL
UC	UNDERCUT DOOR
V	VOLTS
VAV	VARIABLE AIR VOLUME
VD	VOLUME DAMPER
VFD	VARIABLE FREQUENCY DRIVE
W/	WITH
W/O	WITHOUT
WB	WET BULB TEMPERATURE
WG	WATER GAUGE
WMS	WIRE MESH SCREEN

PIPING LEGEND

——CD——	CONDENSATE DRAIN

EQUIPMENT TAG SYMBOLS & ABBREVIATIONS

EQUIPMENT NOT REQUIRING ELECTRIC SERVICE → TAG / NO

SEE SCHEDULE FOR PERFORMANCE REQUIREMENTS ← TAG / NO → EQUIPMENT REQUIRING ELECTRIC SERVICE

AF	AIR FILTER
EF	EXHAUST FAN
ERU	ENERGY RECOVERY UNIT
EUH	ELECTRIC UNIT HEATER
FCU	FAN COIL UNIT
FMS	FLOW MEASURING STATION
HC	HEATING COIL
HV	HEATING AND VENTILATING UNIT
IRV	INTAKE ROOF VENT
MAU	MAKEUP AIR UNIT
REF	RETURN/EXHAUST FAN
RF	RETURN FAN
SF	SUPPLY FAN

INSTRUMENTATION

PI	LOCAL PRESSURE GAUGE W/SHUTOFF AND SNUBBER
DPI	DIFFERENTIAL PRESSURE GAUGE W/SHUTOFFS AND SNUBBERS
TI	LOCAL TEMPERATURE INDICATION
Th	HEATING ONLY THERMOSTAT
Tc	COOLING ONLY THERMOSTAT
T	HEATING/COOLING THERMOSTAT
TT	TEMPERATURE TRANSMITTER
PT	PRESSURE TRANSMITTER
SD	SMOKE DETECTOR
HD	HEAT DETECTOR
FT	FLOW TRANSMITTER
SP	STATIC PRESSURE SENSOR
H	HUMIDITY SENSOR OR HUMIDISTAT
CO2	CARBON DIOXIDE DETECTOR
CO	CARBON MONOXIDE DETECTOR
OS	OCCUPANCY SWITCH
PS	PRESSURE SENSOR SWITCH
S	OCCUPIED/UNOCCUPIED SWITCH

DUCTWORK LEGEND/SYMBOLS

12"x"10	RECTANGULAR DUCTWORK – FIRST DIMENSION IS SIDE SHOWN (IN.) FREE AREA
12"ø	ROUND DUCT DIAMETER (IN.)
	SUPPLY/OUTSIDE AIR DUCTWORK UP
	SUPPLY/OUTSIDE AIR DUCTWORK DOWN
	RETURN/EXHAUST AIR DUCTWORK UP
	RETURN/EXHAUST AIR DUCTWORK DOWN
	FLEXIBLE CONNECTION
	ACOUSTICALLY LINED DUCTWORK
R	CHANGE OF ELEVATION IN DIRECTION OF AIRFLOW (R)RISE,(D)DROP
12x10	RECTANGULAR DUCT TRANSITION
12x10 8x6	RECTANGULAR TO SINGLE LINE TRANSITION
12x10 10ø	RECTANGULAR TO ROUND TRANSITION
	MITERED ELBOW W/ TURNING VANES
	SUPPLY AIR DIFFUSER BELOW DUCT
	RETURN OR EXHAUST REGISTER BELOW DUCT
	ROUND DUCT UP
	SUPPLY AIR DIFFUSER (SQUARE OR RECTANGULAR)
	RETURN AIR GRILLE OR REGISTER
VD	MANUAL VOLUME DAMPER
ACD	AUTOMATIC CONTROL DAMPER
	SUPPLY AIR BLOW DIRECTION
	EXHAUST / RETURN / OR INTAKE

DIFFUSER/REGESTER TAG

TT-X	TYPE-BLOW (CD-1 = CEILING DIFFUSER, 1 WAY BLOW)
0000	CFM

	INLINE CENTRIFUGAL FAN
	ROOF FAN OR VENT

SEQUENCE OF OPERATION

MAKE UP AIR UNIT / EF-1

1. MANUAL SWITCH PLACED IN "UNOCCUPIED"POSITION OR OUTSIDE TEMPERATURE 50 DEG F OR LOWER

   WHEN THE MAKEUP AIR UNIT (MUA) IS STARTED, THE OUTDOOR AIR DAMPER SHALL OPEN 100%, THE SUPPLY FAN SHALL START AND RUN, THE GAS BURNER IS ENABLED, THE EXHAUST FAN EXHAUST AIR DAMPER SHALL OPEN 100% AND THE EXHAUST FAN MOTOR SHALL START AND RUN. THE SUPPLY FAN SHALL RUN CONTINUOUSLY AT A SPEED SUFFICIENT TO PROVIDE 6 AIR CHANGES WITHIN THE SPACE. THE MUA UNIT SHALL ALSO CONTROL THE EF-1 FAN MOTOR AT A SPEED SUFFICIENT TO EXHAUST 6 AIR CHANGES WITHIN THE SPACE. THE MAU GAS BURNER SHALL MODULATE IN RESPONSE TO A WALL MOUNTED THERMOSTAT TO MAINTAIN A SPACE TEMPERATURE SETPOINT OF 50 DEG F (ADJUSTABLE).WHEN THE POWER TO THE UNITS IS CUT, OR THERE IS A POWER OUTAGE, THE MAU OUTDOOR AIR INLET CONTROL DAMPER AND THE EXHAUST AIR CONTROL DAMPER MOTORS SHALL CLOSE VIA A SPRING RETURN.

2. MANUAL SWITCH PLACED IN "OCCUPIED" POSITION OR OUTSIDE TEMPERATURE ABOVE 50 DEG F

   WHEN THE MAKEUP AIR UNIT (MUA) IS STARTED, THE OUTDOOR AIR DAMPER SHALL OPEN 100%, THE SUPPLY FAN SHALL START AND RUN, THE GAS BURNER IS ENABLED, THE EXHAUST FAN EXHAUST AIR DAMPER SHALL OPEN 100% AND THE EXHAUST FAN MOTOR SHALL START AND RUN. THE SUPPLY FAN SHALL RUN CONTINUOUSLY AT A SPEED SUFFICIENT TO PROVIDE 12 AIR CHANGES WITHIN THE SPACE. THE MUA UNIT SHALL ALSO CONTROL THE EF-1 FAN MOTOR AT A SPEED SUFFICIENT TO EXHAUST 12 AIR CHANGES WITHIN THE SPACE. THE MAU GAS BURNER SHALL MODULATE IN RESPONSE TO A WALL MOUNTED THERMOSTAT TO MAINTAIN A SPACE TEMPERATURE SETPOINT OF 50 DEG F (ADJUSTABLE).WHEN THE POWER TO THE UNITS IS CUT, OR THERE IS A POWER OUTAGE, THE MAU OUTDOOR AIR INLET CONTROL DAMPER AND THE EXHAUST AIR CONTROL DAMPER MOTORS SHALL CLOSE VIA A SPRING RETURN.

SPLIT SYSTEM HEAT PUMP

HEAT PUMP SHALL BE CONTROLLED BY A WALL MOUNTED TEMPERATURE CONTROLLER FURNISHED BY THE HEAT PUMP VENDOR. THE CONTROLLER SHALL SEQUENCE THE OUTDOOR UNIT AND THE INDOOR FAN COIL TO MAINTAIN THE FOLLOWING SPACE TEMPERATURE SETPOINTS:

OCCUPIED COOLING:	75 DEG F (ADJUSTABLE)
UNOCCUPIED COOLING:	80 DEG F (ADJUSTABLE)
OCCUPIED HEATING:	70 DEG F (ADJUSTABLE)
UNOCCUPIED HEATING:	60 DEG F (ADJUSTABLE)

RESTROOM EXHAUST FAN

RESTROOM EXHAUST FAN SHALL RUN CONTINUOUSLY.

PREPARED BY

BETA
www.BETA-Inc.com

REGISTERED PROFESSIONAL

COMMONWEALTH OF MASSACHUSETTS
ROBERT L. BOWN
MECHANICAL
NO. 45035
REGISTERED PROFESSIONAL ENGINEER

SUBCONSULTANT

SAR ENGINEERING, INC.
Mechanical/Electrical Engineers
150 Grossman Drive, Suite 309
Braintree, Massachusetts 02184
617 221-9220
web: www.sar.com

PROJECT

Plymouth Airport Wastewater Treatment Facility Improvements

Plymouth, MA

TITLE

Hvac Legend and General Notes

NO.	REVISIONS	DATE

DRAWN BY:	RLB
DESIGNED BY:	RLB
CHECKED BY:	RHB
ISSUE DATE:	9/30/2022
BETA JOB NO.:	10042

SCALE

AS SHOWN

UNLESS OTHERWISE NOTED OR CHANGED BY REPRODUCTION

SHEET NO.

H-1

9/30/2022 7:15 AM W:\YEAR - 2021\21001.00 - PLYMOUTH AIRPORT WWTF UPGRADES\HVAC DEPARTMENT\21001.00 HVAC PLANS.DWG (BETA STB BW.STB)

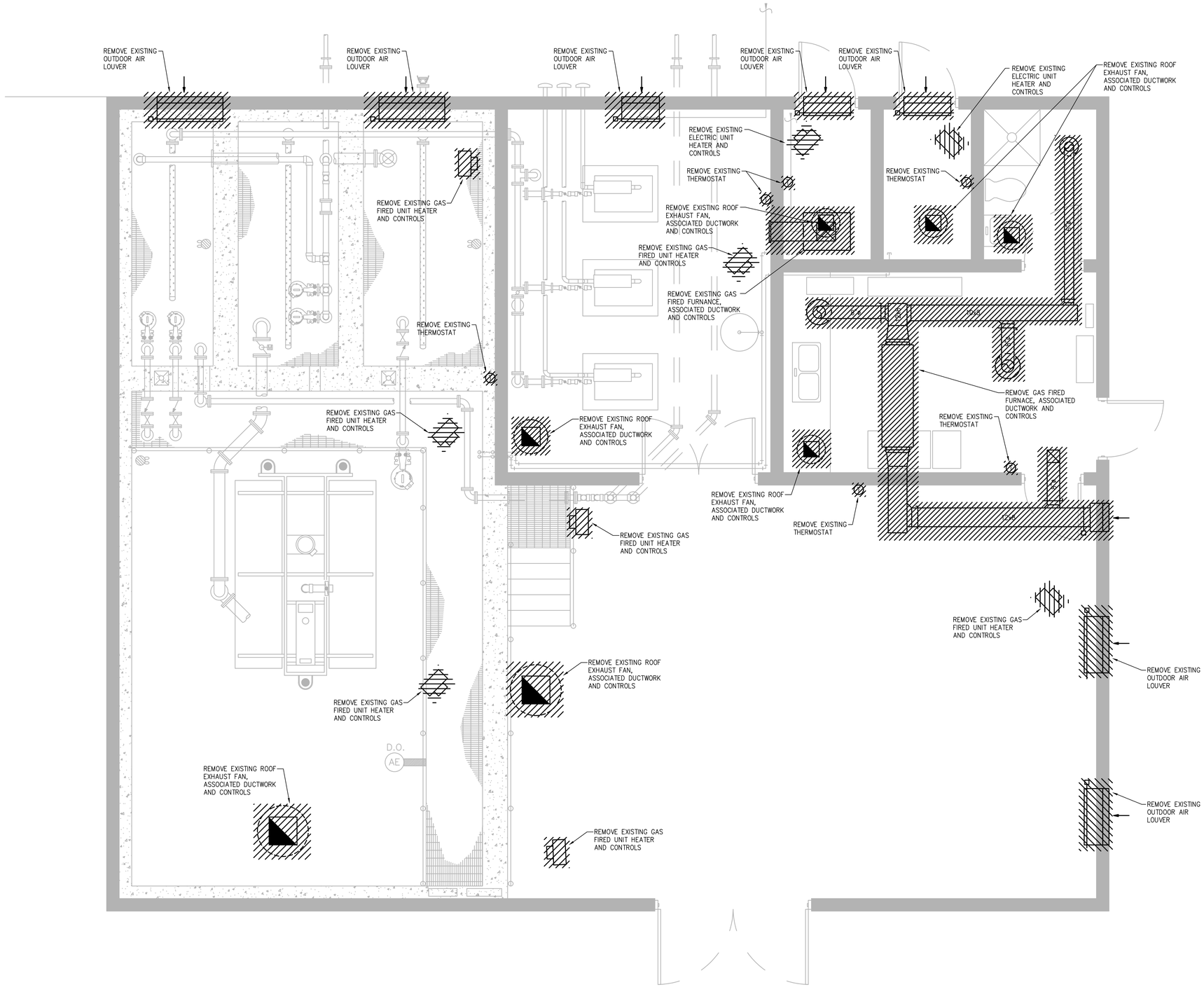

WWTF BUILDING PLAN

SCALE: 3/8"= 1'-0"

PREPARED BY

BETA
www.BETA-Inc.com

REGISTERED PROFESSIONAL

COMMONWEALTH OF MASSACHUSETTS
RODERICK H. BROWN
MECHANICAL
NO. 45535
REGISTERED PROFESSIONAL ENGINEER

SUBCONSULTANT

SAR ENGINEERING, INC.

Mechanical/Electrical Engineers
150 Grossman Drive, Suite 309
Braintree, Massachusetts 02184
617 221-9220
web: www.sar.com

PROJECT

Plymouth Airport Wastewater Treatment Facility Improvements

Plymouth, MA

TITLE

Hvac
Demolition Plan

NO.	REVISIONS	DATE

DRAWN BY:	RLB
DESIGNED BY:	RLB
CHECKED BY:	RHB
ISSUE DATE:	9/30/2022
BETA JOB NO.:	10042

SCALE

AS SHOWN

UNLESS OTHERWISE NOTED OR CHANGED BY REPRODUCTION

SHEET NO.

H-2

9/30/2022 7:15 AM W:\YEAR - 2021\21001.00 - PLYMOUTH AIRPORT WWTF UPGRADES\HVAC DEPARTMENT\21001.00 HVAC PLANS.DWG (BETA STB BW.STB)

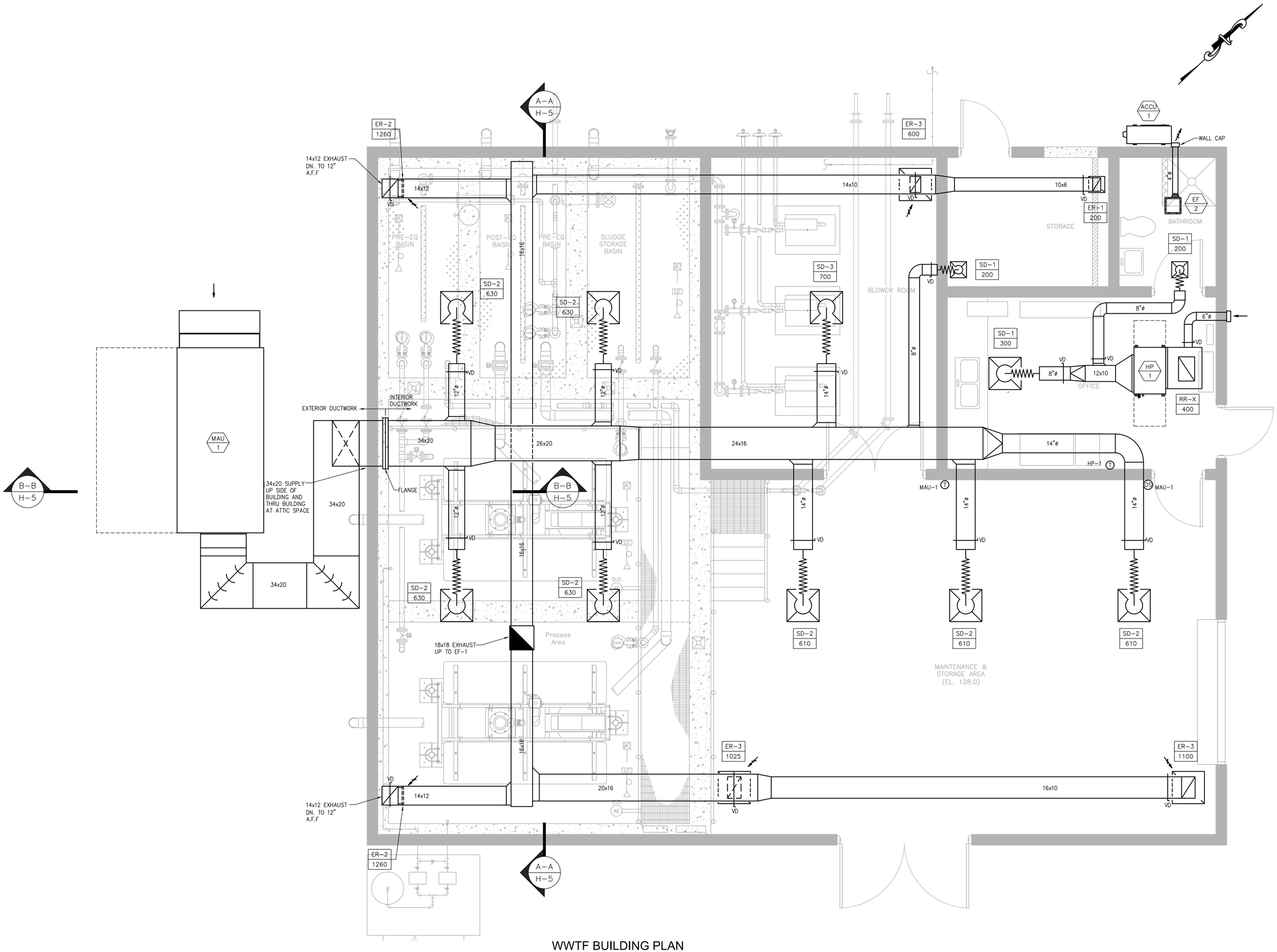

WWTF BUILDING PLAN

SCALE: 3/8"= 1'-0"

PREPARED BY

BETA
www.BETA-Inc.com

REGISTERED PROFESSIONAL

COMMONWEALTH OF MASSACHUSETTS
ROBERT A. BROWN
MECHANICAL
NO. 45595
REGISTERED PROFESSIONAL ENGINEER

SUBCONSULTANT

SAR ENGINEERING, INC.
Mechanical/Electrical Engineers
150 Grossman Drive, Suite 309
Braintree, Massachusetts 02184
617 221-9220
web: www.sar.com

PROJECT

Plymouth Airport Wastewater Treatment Facility Improvements

Plymouth, MA

TITLE

Hvac
New Work Plan

NO.	REVISIONS	DATE

DRAWN BY:	RLB
DESIGNED BY:	RLB
CHECKED BY:	RHB
ISSUE DATE:	9/30/2022
BETA JOB NO.:	10042

SCALE

AS SHOWN

UNLESS OTHERWISE NOTED OR CHANGED BY REPRODUCTION

SHEET NO.

H-3

9/30/2022 7:15 AM W:\YEAR - 2021\21001.00 - PLYMOUTH AIRPORT WWTF UPGRADES\HVAC DEPARTMENT\21001.00 HVAC PLANS.DWG (BETA STB BW.STB)

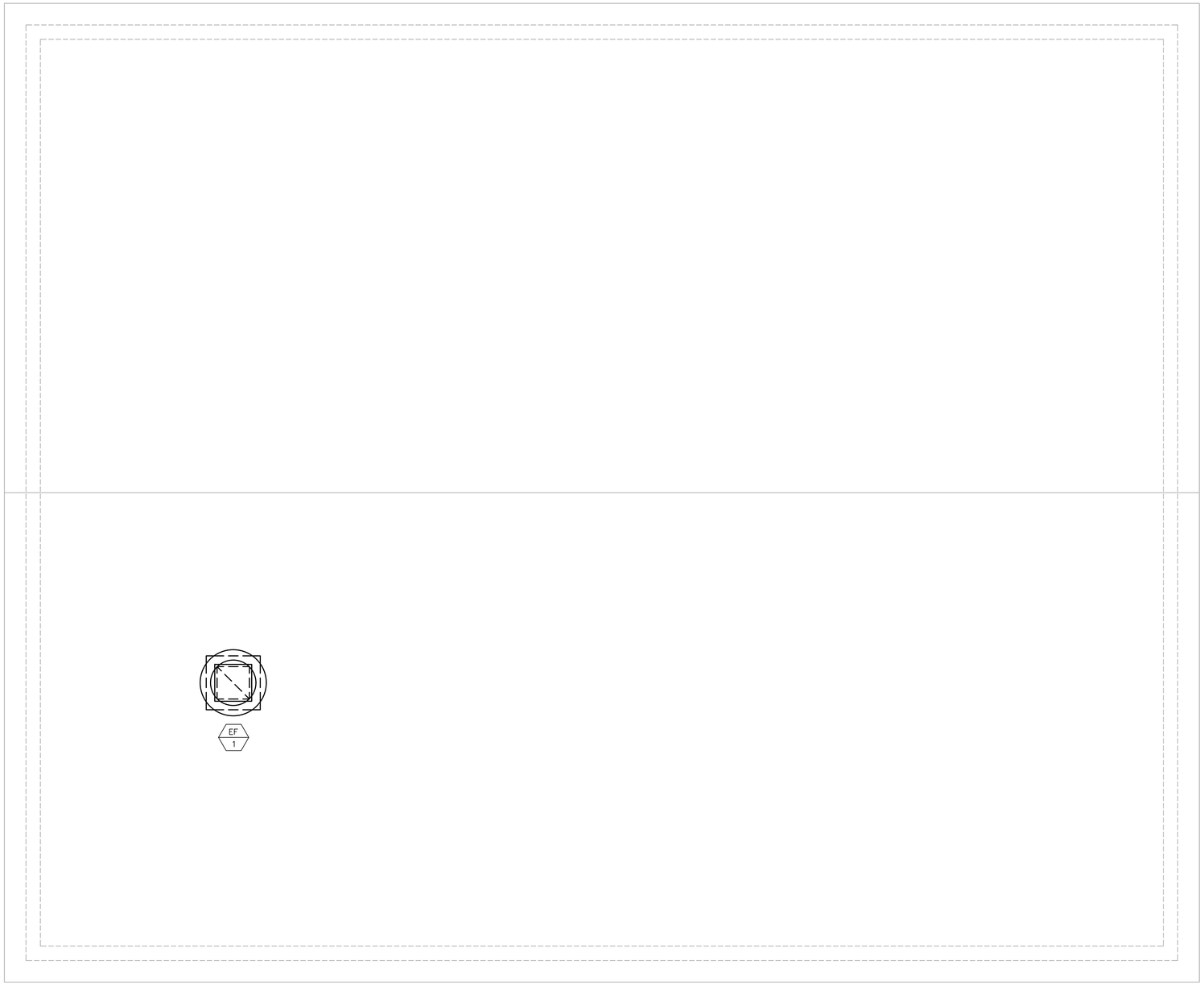

WWTF BUILDING PLAN

SCALE: 3/8"= 1'-0"

PREPARED BY

BETA

www.BETA-Inc.com

REGISTERED PROFESSIONAL

COMMONWEALTH OF MASSACHUSETTS
ROBERTA L. BROWN
MECHANICAL
NO. 45595
REGISTERED PROFESSIONAL ENGINEER

SUBCONSULTANT

SAR ENGINEERING, INC.

Mechanical/Electrical Engineers
150 Grossman Drive, Suite 309
Braintree, Massachusetts 02184
617 221-9220
web: www.sar.com

PROJECT

Plymouth Airport Wastewater Treatment Facility Improvements

Plymouth, MA

TITLE

Hvac
New Work Roof
Plan

NO.	REVISIONS	DATE

DRAWN BY:	RLB
DESIGNED BY:	RLB
CHECKED BY:	RHB
ISSUE DATE:	9/30/2022
BETA JOB NO.:	10042

SCALE

AS SHOWN

UNLESS OTHERWISE NOTED OR CHANGED BY REPRODUCTION

SHEET NO.

H-4

9/30/2022 7:15 AM W:\YEAR - 2021\21001 00 - PLYMOUTH AIRPORT WWTF UPGRADES\HVAC DEPARTMENT\21001 00 HVAC PLANS.DWG (BETA STB BW.STB)

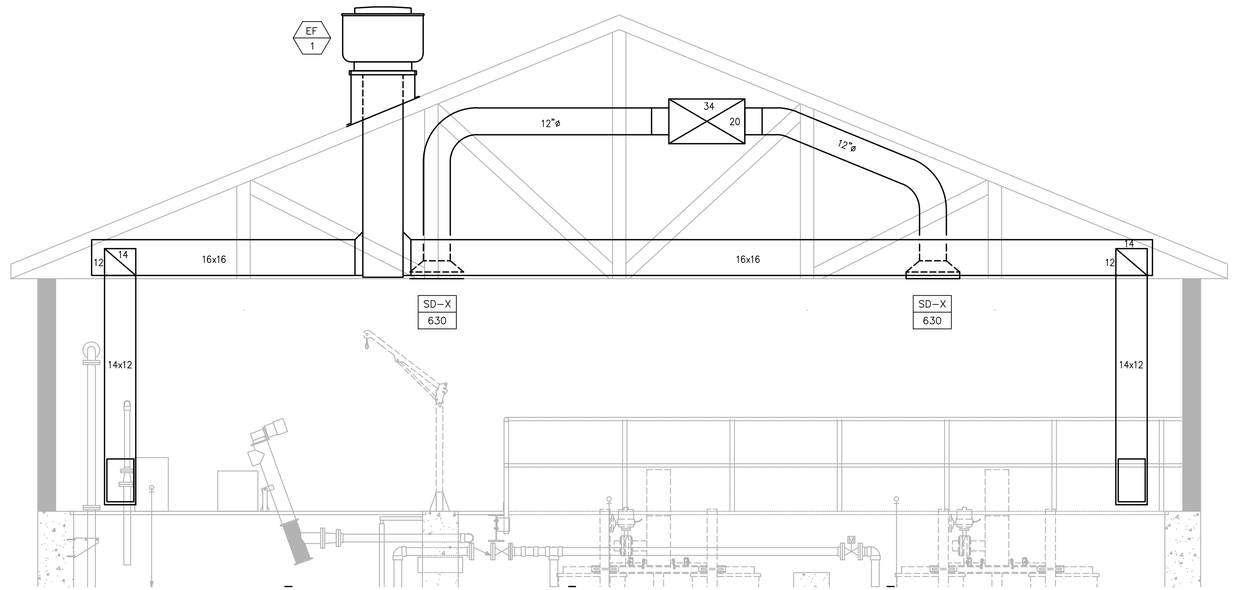

SECTION A-A

SCALE: 3/8"= 1'-0"

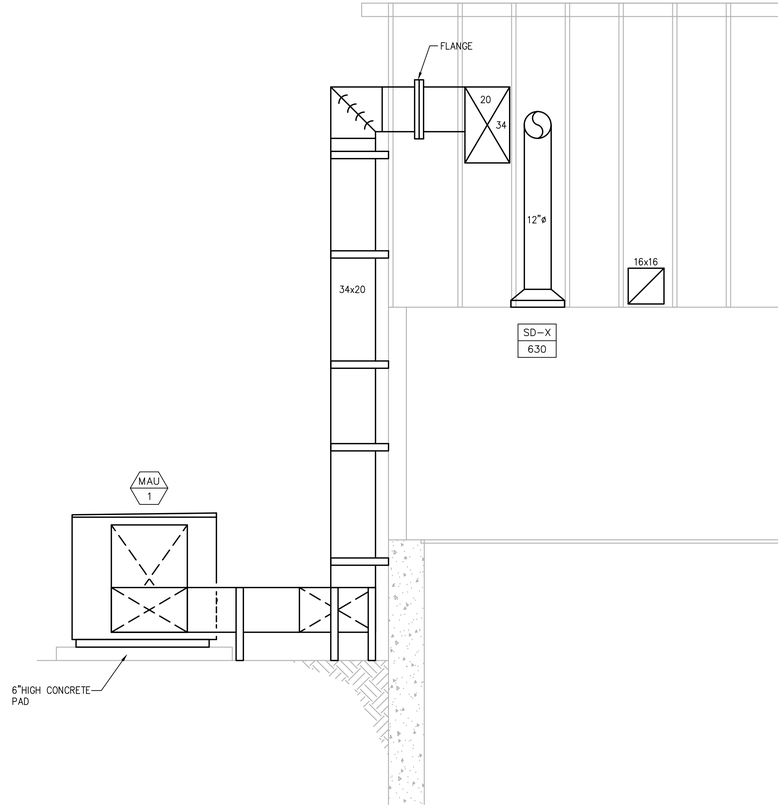

SECTION B-B

SCALE: 3/8"= 1'-0"

PREPARED BY

BETA
www.BETA-Inc.com

REGISTERED PROFESSIONAL

COMMONWEALTH OF MASSACHUSETTS
ROBERT A. BROWN
MECHANICAL
NO. 45535
REGISTERED PROFESSIONAL ENGINEER

SUBCONSULTANT

SAR ENGINEERING, INC.
Mechanical/Electrical Engineers
150 Grossman Drive, Suite 309
Braintree, Massachusetts 02184
617 221-9220
web: www.sar.com

PROJECT

Plymouth Airport Wastewater Treatment Facility Improvements

Plymouth, MA

TITLE

Hvac Section

NO.	REVISIONS	DATE

DRAWN BY:	RLB
DESIGNED BY:	RLB
CHECKED BY:	RHB
ISSUE DATE:	9/30/2022
BETA JOB NO.:	10042

SCALE

AS SHOWN

UNLESS OTHERWISE NOTED OR CHANGED BY REPRODUCTION

SHEET NO.

H-5

9/30/2022 7:16 AM W:\YEAR - 2021\21001.00 - PLYMOUTH AIRPORT WWTF UPGRADES\HVAC DEPARTMENT\21001.00 HVAC PLANS.DWG (BETA STB BW.STB)

MAU 1 — MAKE-UP AIR UNIT SCHEDULE

TAG NO.	LOCATION	SUPPLY BLOWER				GAS (PROPANE)							ELECTRICAL DATA						WEIGHT LBS	MANUFACTURER MODEL NUMBER	REMARKS
		OA CFM	ESP (IN WC)	TSP (IN WC)	FAN HP	INPUT (MBH)	OUTPUT (MBH)	OUTDOOR TEMP D.B.	OUTDOOR TEMP D.B.	LEAVING TEMP D.B.	LEAVING TEMP D.B.	TURNDOWN	MCA	MOCP	FLA	V	PH	HZ			
MUA-1	GRADE	5,250	1.5	2.48	5	540	432	5°F	4°F	81.1°F	50.2°F	18-1	11	15	9	480	3	60	2,304	AAON RNA-016-C-0-3	1 2 3 4 5 6 7 8 9

1 BASE RAILS 2 FACTORY MOUNTED DISCONNECT 3 SINGLE POINT POWER CONNECTION 4 VFD 5 INSTALLED OUTDOOR 6 AIR FLOW STATION 7 MAU SHALL CONTROL EXHAUST FAN EF-1 AT 50% AND 100% CFM
8 POLYMER E-COATED COILS 8 INTERIOR & EXTERIOR CORROSION PROTECTION FOR COASTAL ENVIRONMENTS.

EF — EXHAUST FAN SCHEDULE

TAG NO.	LOCATION	CFM	ESP (IN WC)	SPEED (RPM)		DRIVE	ELECTRICAL DATA				MANUFACTURER & MODEL #	REMARKS
				FAN	MOTOR		HP	V	PH	HZ		
EF-1	ROOF	5,250	1.5	1313	1360	DIRECT	3	480	3	60	GREENHECK CUE-200	1 2
EF-2	RESTROOM	80	0.20	831	–	DIRECT	11W	120	1	60	GREENHECK SP-AP0511W	

1 VFD RATED MOTOR 2 INTERIOR & EXTERIOR CORROSION PROTECTION FOR COASTAL ENVIRONMENTS.

SPLIT-SYSTEM HEAT PUMP SCHEDULE

HP FAN COIL UNIT								ACCU OUTDOOR UNIT								REMARKS
TAG	AREA SERVED	MFG'R. & MODEL NO.	TYPE UNIT	HEAT MBH	COOL MBH	CFM	ELEC. V/PH/HZ	TAG	LOCATION	MFG'R. & MODEL NO.	HEAT MBH	COOL MBH	ELEC. V/PH/HZ	MCA	MOP	
HP-1	OFFICE –	LENNOX MMDB018S4-2P	DUCTED	19.0	16.5	–	VIA ACCU-1	ACCU-1	GRADE	LENNOX MLA018S4S-1P	19.0	16.5	208/1/60	18	25	1 2 3

1 PROVIDE WITH LOW AMBIENT HEATING AND COOLING 2 WALL MOUNTED BRACKET FOR ACCU 3 WALL MOUNTED BRACKET FOR ACCU

DIFFUSER, REGISTER & GRILLE SCHEDULE

TAG NO.	MODULE SIZE (IN)	ROUND APAPTER SIZE (IN)	FLEX DUCT SIZE (IN)	SQUARE DUCT SIZE (IN)	SERVICE	CFM RANGE		MAX. NC LEVEL	MANUFACTURER & MODEL NO.	REMARKS
						MIN	MAX			
SD-1	12"x12"	8"ø	8"ø	N/A	SUPPLY	140	315	23	NAILOR 6500	
SD-2	24"x24"	12"ø	12"ø	N/A	SUPPLY	315	630	28	NAILOR 6500	
SD-3	24"x24"	14"ø	14"ø	N/A	SUPPLY	640	950	28	NAILOR 6500	
ER-1	12"x12"	N/A	N/A	10"x6"	EXHAUST	100	250	28	NAILOR 350RL	
ER-2	12"x28"	N/A	N/A	10"x26"	EXHAUST	1000	1260	28	NAILOR 350RL	
ER-3	24"x24"	N/A	N/A	20"x20"	EXHAUST	500	1900	28	NAILOR 350RL	

9/30/2022 7:16 AM W:\YEAR - 2021\21001.00 - PLYMOUTH AIRPORT WWTF UPGRADES\HVAC DEPARTMENT\21001.00 HVAC PLANS.DWG (BETA STB.BW.STB)

PREPARED BY

BETA
www.BETA-Inc.com

REGISTERED PROFESSIONAL

COMMONWEALTH OF MASSACHUSETTS
ROBERT A. BROWN
MECHANICAL
NO. 45035
REGISTERED PROFESSIONAL ENGINEER

SUBCONSULTANT

SAR ENGINEERING, INC.
Mechanical/Electrical Engineers
150 Grossman Drive, Suite 309
Braintree, Massachusetts 02184
617 221-9220
web: www.sar.com

PROJECT

Plymouth Airport Wastewater Treatment Facility Improvements

Plymouth, MA

TITLE

Hvac Schedules

NO.	REVISIONS	DATE

DRAWN BY:	RLB
DESIGNED BY:	RLB
CHECKED BY:	RHB
ISSUE DATE:	9/30/2022
BETA JOB NO.:	10042

SCALE

AS SHOWN

UNLESS OTHERWISE NOTED OR CHANGED BY REPRODUCTION

SHEET NO.

H-6

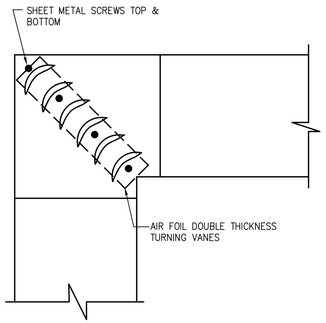

NOTE:
PROVIDE TURNING VANES IN ALL 90° DUCT ELBOWS HAVING A CENTERLINE RADIUS LESS THEN 1/2 TIMES THE DUCT WIDTH.

1 TYPICAL 90° DUCT ELBOW DETAIL
NO SCALE

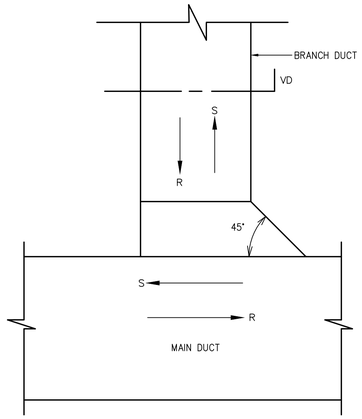

2 BRANCH DUCT CONNECTION DETAIL
NO SCALE

DIFFUSER NECK SIZE	ROUND DUCT SIZE
6"X6"	6"ø
7 1/2"X7 1/2"	7"ø
9"X9"	9"ø
10 1/2"X10 1/2"	10"ø
12"X12"	12"ø

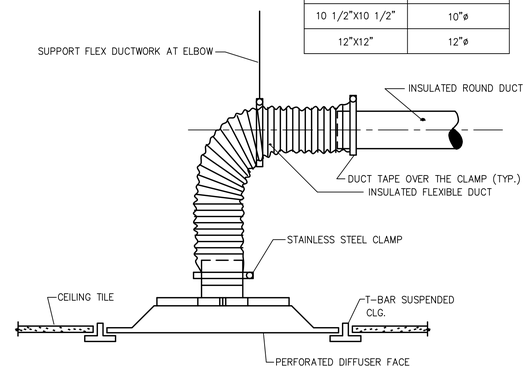

3 SUPPLY DIFFUSER CONNECTION DETAIL
NO SCALE

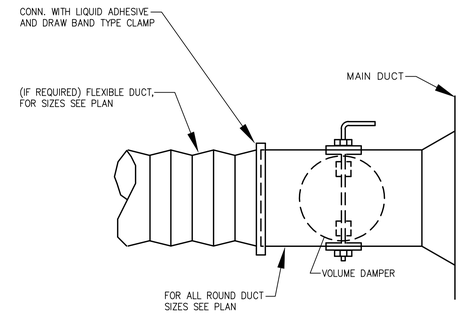

4 ROUND BRANCH DUCT TAKE-OFF DETAIL
NO SCALE

HD-017

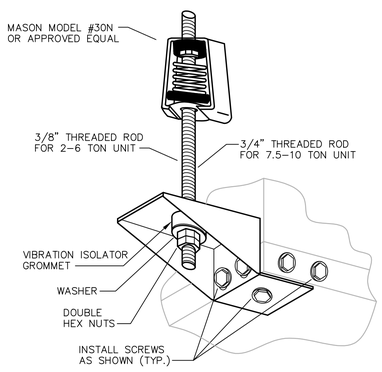

5 HORIZONTAL HEAT PUMP UNIT HANGER KIT ASSEMBLY
NO SCALE

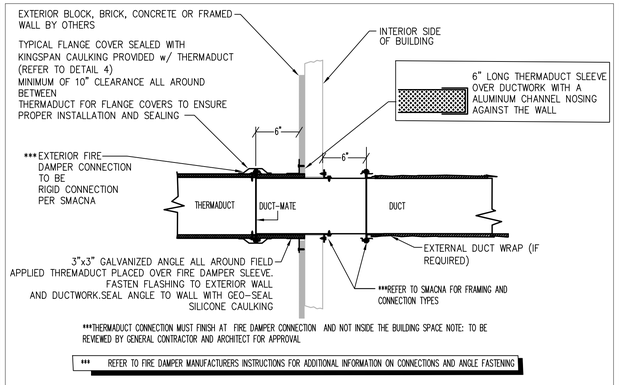

6 DUCT PENETRATION AT EXTERIOR WALL DETAIL
NO SCALE

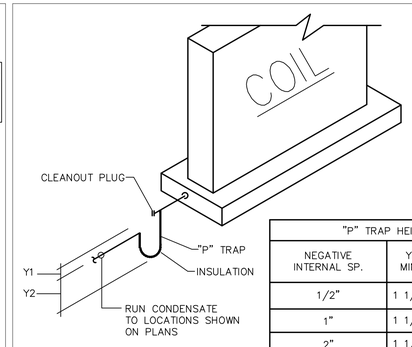

"P" TRAP HEIGHT SCHEDULE			
NEGATIVE INTERNAL SP.	Y1 MIN.	Y2 MIN.	DRAIN SIZE
1/2"	1 1/4"	2"	3/4"
1"	1 1/2"	2"	1"
2"	1 1/2"	2"	1"
4"	1 3/4"	3"	1 1/4"
6"	2"	4"	1 1/2"

7 "P" TRAP DETAIL
NO SCALE

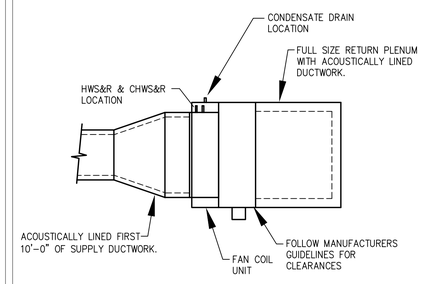

8 FAN COIL UNIT DETAIL
NO SCALE

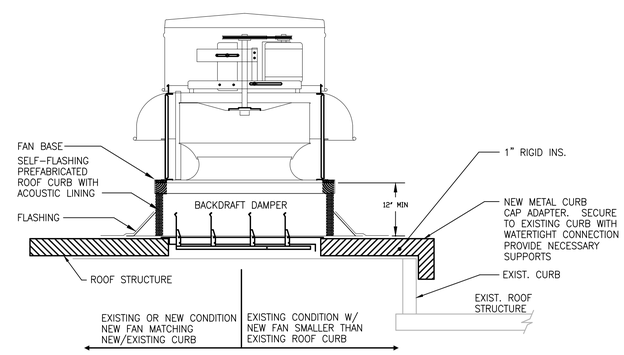

PROVIDE SHIMS FOR CURB WHERE ROOF PITCHES TO DRAIN
PROVIDE SLOPED ROOF CURB FOR SLOPED ROOF
PROVIDE BACK DRAFT DAMPERS FOR ALL ROOF FANS
CURB TYPE TO SUIT ROOF STRUCTURE (SEE ARCH. DWGS.)

9 ROOF EXHAUST FAN MOUNTED ON EXISTING CURB
NO SCALE

PREPARED BY

BETA
www.BETA-Inc.com

REGISTERED PROFESSIONAL

SUBCONSULTANT

SAR ENGINEERING, INC.
Mechanical/Electrical Engineers
150 Grossman Drive, Suite 309
Braintree, Massachusetts 02184
617 221-9220
web: www.sar.com

PROJECT

Plymouth Airport Wastewater Treatment Facility Improvements

Plymouth, MA

TITLE

Hvac Details I

NO.	REVISIONS	DATE

DRAWN BY:	RLB
DESIGNED BY:	RLB
CHECKED BY:	RHB
ISSUE DATE:	9/30/2022
BETA JOB NO.:	10042

SCALE

AS SHOWN

UNLESS OTHERWISE NOTED OR CHANGED BY REPRODUCTION

SHEET NO.

H-7

9/30/2022 7:16 AM W:\YEAR - 2021\21001 00 - PLYMOUTH AIRPORT WWTF UPGRADES\HVAC DEPARTMENT\21001 00 HVAC PLANS.DWG (BETA STB BW.STB)

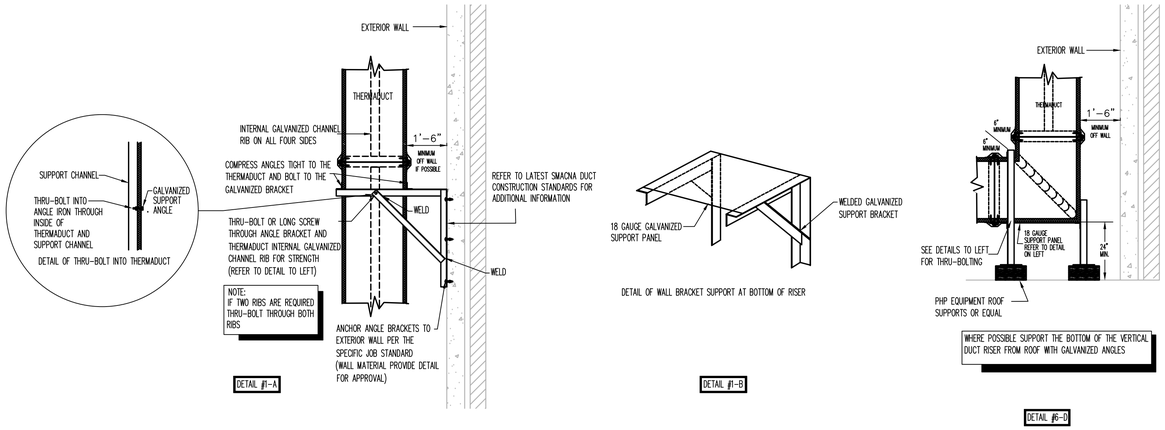

1 TYPICAL EXTERIOR RISER SUPPORTS

NO SCALE

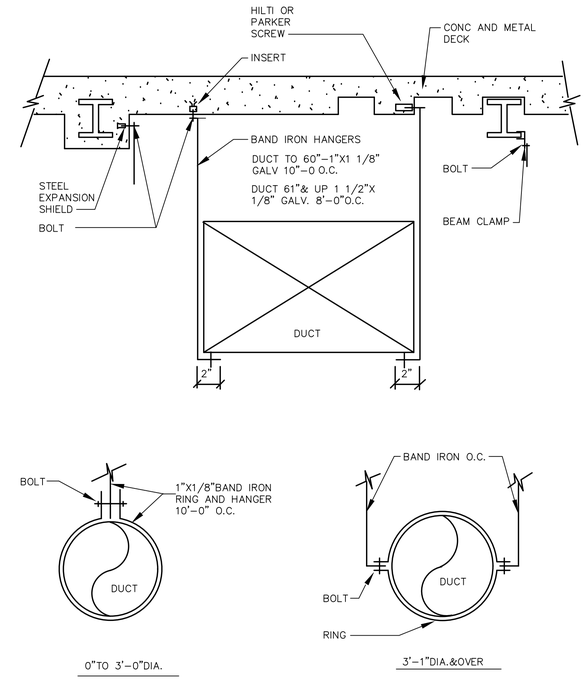

2 STANDARD HANGING DETAIL

NO SCALE

HD-032

PREPARED BY

BETA
www.BETA-Inc.com

REGISTERED PROFESSIONAL

COMMONWEALTH OF MASSACHUSETTS
ROBERT L. BROWN
MECHANICAL
NO. 45595
REGISTERED PROFESSIONAL ENGINEER

SUBCONSULTANT

SAR ENGINEERING, INC.

Mechanical/Electrical Engineers
150 Grossman Drive, Suite 309
Braintree, Massachusetts 02184
617 221-9220
web: www.sar.com

PROJECT

Plymouth Airport Wastewater Treatment Facility Improvements

Plymouth, MA

TITLE

Hvac Details II

NO.	REVISIONS	DATE

DRAWN BY:	RLB
DESIGNED BY:	RLB
CHECKED BY:	RHB
ISSUE DATE:	9/30/2022
BETA JOB NO.:	10042

SCALE

AS SHOWN

UNLESS OTHERWISE NOTED OR CHANGED BY REPRODUCTION

SHEET NO.

H-8

9/30/2022 7:16 AM W:\YEAR - 2021\21001.00 - PLYMOUTH AIRPORT WWTF UPGRADES\HVAC DEPARTMENT\21001.00 HVAC PLANS.DWG (BETA STB BW.STB)

PLUMBING FIXTURE SCHEDULE

DESIGNATION	FIXTURE DESCRIPTION	CONNECTION SIZE							REMARKS
		W1	HW1	BLW	SAN	V	NPCW	NPHW	
WC-1	WATER CLOSET	1"	–	–	4"	2"	–	–	WALL HUNG – CARRIER SUPPORTED
LAV-1	LAVATORY	1/2"	1/2"	–	2"	2"	–	–	WALL HUNG – CARRIER SUPPORTED
LS-1	OFFICE SINK	1/2"	1/2"	–	2"	2"	–	–	DROP IN
SH-1	SHOWER	1/2"	1/2"	–	2"	2"	–	–	–
SS-1	JANITOR SINK	1/2"	1/2"	–	3"	2"	–	–	FAUCET SHALL HAVE INTEGRAL CHECK VALVES
HB	HOSE BIBB	1/2"	–	–	–	–	–	–	–
HS	HOSE STATION	–	–	–	–	–	3/4"	–	–
ES-1	EMERGENCY SHOWER/EYEWASH	–	–	1 1/4"	–	–	–	–	EXTERIOR MOUNTED, CORROSION RESISTANT, EMERGENCY SHOWER WITH HORN, STROBE AND FLOW SWITCH
EW-1	EMERGENCY EYEWASH	–	–	1 1/4"	–	–	–	–	EXTERIOR MOUNTED, CORROSION RESISTANT, EMERGENCY EYEWASH WITH HORN, STROBE AND FLOW SWITCH

NOTES:
1. ALL FINAL CONNECTIONS TO CASEWORK SINKS AND EQUIPMENT SHALL BE BY THE PLUMBING CONTRACTOR.
2. ALL EXPOSED VALVES, PIPING AND FITTINGS SHALL BE CHROME PLATED.
3. PLUMBING CONTRACTOR SHALL PROVIDE EACH CONNECTION TO EACH SINK OR PIECE OF EQUIPMENT ITS OWN INDIVIDUAL SHUTOFF VALVE.
4. MANUFACTURED CASEWORK CONTRACTOR SHALL PROVIDE ALL EQUIPMENT LISTED IN THE CASEWORK SCHEDULE INCLUDING TRIM, FAUCETS, BUBBLERS, SINK WASTES AND TAIL PIECES. PLUMBING CONTRACTOR SHALL PROVIDE FULL SIZE TRAP AND EXTENSION. PLUMBING CONTRACTOR SHALL ASSEMBLE AND INSTALL ALL PLUMBING RELATED ITEMS INCLUDING TRIM, FAUCETS, BUBBLERS, SINK WASTE, TAIL PIECES, TRAPS AND EXTENSIONS.

PROPANE FIRED TANKLESS WATER HEATER SCHEDULE

TAG NO.	MANUFACTURER AND MODEL NO.	MAX INPUT (MBH)	CONTINUOUS FLOW RATE (GPM) AT 80° RISE	FLUE SIZE (IN.)	OUTLET TEMP SETTING (° F)	REMARKS
GWH-1	NORITZ MODEL NC380	380	7.8	6	120	–

SHOCK ABSORBER SCHEDULE

PDI RATING SYMBOL	A	B	C	D	E
PRECISION PLUMBING PRODUCTS OR EQUAL	SC-500	SC-750	SC-1000	SC-1250	SC-1500
WATTS REGULATOR COMPANY OR EQUAL	0750030	0750053	0750060	0750070	0750090
WADE OR EQUAL	5-P	10-P	20-P	50-P	75-P

* MANUFACTURERS NAMES AND MODEL NUMBERS ARE SHOWN ONLY TO REPRESENT TYPE, STYLE AND LEVEL OF QUALITY EXPECTED, SIMILAR EQUALS BY OTHER SPECIFIED MANUFACTURERS WILL BE ACCEPTABLE.

CIRCULATING PUMP SCHEDULE

DESIGNATION	LOCATION	WATER HEATER SERVED	MODEL	CAPACITY (GPM)	HEAD (FEET)	TYPE	ELECTRICAL REQUIREMENTS				REMARKS
							RPM	HP	VOLTS	Φ	
RP-1	MECH ROOM	TWH-1	TACO 006B	2	6	INLINE	3250	1/40	115	1	SERVES 120° HW SYSTEM

* MANUFACTURERS NAMES AND MODEL NUMBERS ARE SHOWN ONLY TO REPRESENT TYPE, STYLE AND LEVEL OF QUALITY EXPECTED, SIMILAR EQUALS BY OTHER SPECIFIED MANUFACTURERS WILL BE ACCEPTABLE.

PLUMBING NOTES

1. THE WORK COVERED CONSISTS OF FURNISHING ALL LABOR AND MATERIALS NECESSARY TO INSTALL, COMPLETE AND READY FOR CONTINUOUS OPERATION, THE PLUMBING SYSTEMS, APPARATUS AND EQUIPMENT FOR THIS PROJECT.
2. ALL EQUIPMENT AND MATERIALS FURNISHED UNDER THE PLUMBING SUB-CONTRACT, LABOR AND TESTING PERFORMED HEREIN SHALL BE IN COMPLETE ACCORDANCE WITH THE STATE BUILDING CODE, LOCAL FUEL GAS AND PLUMBING CODES, ALL LOCAL CODES AND REGULATIONS, NATIONAL FIRE PROTECTION ASSOCIATION, INSURANCE REGULATIONS AND REQUIREMENTS GOVERNING SUCH WORK.
3. ANY AND ALL PERMITS REQUIRED FOR INSTALLATION OF ANY MATERIAL SHALL BE OBTAINED AS PART OF THE WORK OF THE SPECIFICATION INCLUDING ALL FEES OR EXPENSES INCURRED.
4. ALL PRODUCTS USED AS PART OF THE POTABLE WATER SYSTEM WHERE THE INTENDED PURPOSE IS TO DELIVER OR CONVEY POTABLE WATER FOR HUMAN CONSUMPTION SHALL BE LEAD FREE AND CONFORM TO THE LATEST "LEAD FREE" LAW.
5. WHERE WATER PIPING IS SHOWN DROPPING INTO PLUMBING CHASES WITH SIZES NOTED, THAT SIZE SHALL BE CARRIED FULL LENGTH THROUGH THE CHASE. REFER TO PLUMBING FIXTURE SCHEDULE ON THIS DRAWING FOR INDIVIDUAL FIXTURE CONNECTION SIZES.
6. UNLESS OTHERWISE NOTED, ALL HORIZONTAL DRAINAGE PIPING WHICH IS 3" OR LESS IN DIAMETER SHALL PITCH OF NOT LESS THAN 1/4" PER FOOT AND ALL HORIZONTAL DRAINAGE PIPING WHICH IS 4" OR LARGER IN DIAMETER SHALL PITCH OF NOT LESS THAN 1/8" PER FOOT.
7. PROVIDE ALL FLOOR CLEANOUTS WITH HUB AND SPIGOT; LEAD AND OAKUM JOINTS FROM CLEANOUT TO AND INCLUDING CONNECTION TO SANITARY DRAIN.
8. REFER TO ARCHITECTURAL PLANS FOR EXACT LOCATION AND HEIGHT OF ALL PLUMBING FIXTURES.
9. MISCELLANEOUS DISCREPANCIES OR OMISSIONS WHICH MIGHT APPEAR ON THE PLANS OR SPECIFICATIONS WILL NOT RELIEVE THE PLUMBING SUB-CONTRACTOR OF CODE COMPLIANCE.
10. ALL FLOOR DRAINS SHALL BE PROVIDED WITH A TRAP PRIMER CONNECTION. CONTRACTOR SHALL PROVIDE ALL ASSOCIATED EQUIPMENT NECESSARY TO PROVIDE A COMPLETE SYSTEM INCLUDING AN ELECTRONICALLY OPERATED PRIMING MANIFOLD AND ALL ASSOCIATED PIPING REQUIRED.
11. PROVIDE CLEANOUTS AT ALL CHANGE OF DIRECTIONS FOR SANITARY/WASTE PIPING.
12. PROVIDE WALL CLEANOUTS WITH ACCESS PANELS AT ALL SANITARY/WASTE PIPING WITHIN PIPE CHASES OR WALLS.
13. HANDICAPPED ACCESSIBLE FIXTURES SHALL BE IN ACCORDANCE WITH THE AMERICANS WITH DISABILITIES ACT ACCESSIBILITY GUIDELINES FOR BUILDINGS AND FACILITIES AND THE RULES AND REGULATIONS OF THE MASSACHUSETTS ARCHITECTURAL ACCESS BOARD. WHERE THE TWO STANDARDS DIFFER, THE MORE STRINGENT SHALL APPLY.
14. ALL BURIED DOMESTIC WATER PIPING, NON-POTABLE WATER PIPING, TEMPERED WATER PIPING OR AIR PIPING SHALL BE SOFT ROLLED "K" COPPER COIL AND BE PROTECTED WITH A HIGH DENSITY RUBBER INSULATION. FITTINGS SHALL NOT BE PERMITTED IN OR UNDER SLAB. PROVIDE SLAB PENETRATIONS WITH SLEEVE AND FIRE STOPPING.

PLUMBING LEGEND

SYMBOL	ABBREVIATION	DESCRIPTION
		BELOW FLOOR PIPING (INDICATED AS DOUBLE LINEWORK)
	CW	COLD WATER
	HW	HOT WATER
	HWR	HOT WATER RETURN
NPCW	NPCW	NON-POTABLE COLD WATER
	S or W	SOIL OR WASTE
	V	VENT
G	G	PROPANE GAS
	CONT	CONTINUATION
	UP	PIPE RISE OR UP
	DN	PIPE DROP OR DOWN
	TEE	PIPE TEE
	SOV	SHUT-OFF VALVE
	PRV	PRESSURE REDUCING VALVE
	BVA	BALANCING VALVE ASSEMBLY
	VIV	VALVE IN VERTICAL
	CV	CHECK VALVE
	W & T	WASTE & TRAP
	CO	CLEANOUT PLUG
		GAS SHUTOFF VALVE
	FCO	FLUSH FLOOR CLEANOUT
		ARROW INDICATES DIRECTION OF FLOW
.01		ARROW INDICATES DIRECTION OF SLOPE
		UNION
	WTS	WATERTIGHT SLEEVE
	HB	HOSE BIBB
	WH	WALL HYDRANT
	FD "A"	FLOOR DRAIN & TYPE
	RPZ	REDUCED PRESSURE ZONE ASSEMBLY
WM	WM	WATER METER
	T	THERMOMETER
	PG	PRESSURE GAUGE WITH PETCOCK
	T&P	TEMPERATURE AND PRESSURE RELIEF VALVE
	SA	SHOCK ABSORBER
		VACUUM RELIEF VALVE
	POC	POINT OF CONNECTION
	WH-1	WATER HEATER & NUMBER
	SS	SOIL STACK
	VS	VENT STACK
	VTR	VENT THRU ROOF
	INV	INVERT
	TYP	TYPICAL
	NTS	NOT TO SCALE
	AFF	ABOVE FINISHED FLOOR
	LPC	LIMIT OF PLUMBING CONTRACT
	S=.01	SLOPE = 1/8" PER FOOT
	S=.02	SLOPE = 1/4" PER FOOT
	F.F.E.	FINISHED FLOOR ELEVATION
	PD	PUMPED DISCHARGE
	ETP	ELECTRONIC TRAP PRIMER
	ETR	EXISTING TO REMAIN

PREPARED BY

BETA
www.BETA-Inc.com

REGISTERED PROFESSIONAL

JAMES A. LUCIE PLUMBING No. 38996 COMMONWEALTH OF MASSACHUSETTS

SUBCONSULTANT

SAR ENGINEERING, INC.
Mechanical/Electrical Engineers
150 Grossman Drive, Suite 309
Braintree, Massachusetts 02184
617 221-9220
web: www.sar.com

PROJECT

Plymouth Airport Wastewater Treatment Facility Improvements

Plymouth, MA

TITLE

Plumbing Legend and General Notes

NO.	REVISIONS	DATE

DRAWN BY:	RLB
DESIGNED BY:	RLB
CHECKED BY:	JAL
ISSUE DATE:	9/30/2022
BETA JOB NO.:	10042

SCALE

AS SHOWN

UNLESS OTHERWISE NOTED OR CHANGED BY REPRODUCTION

SHEET NO.

P-1

9/30/2022 7:03 AM W:\YEAR - 2021\21001.00 - PLYMOUTH AIRPORT WWTF UPGRADES\PLUMBING DEPARTMENT\21001.00 PLUMBING PLANS.DWG (BETA STB.BW.STB)

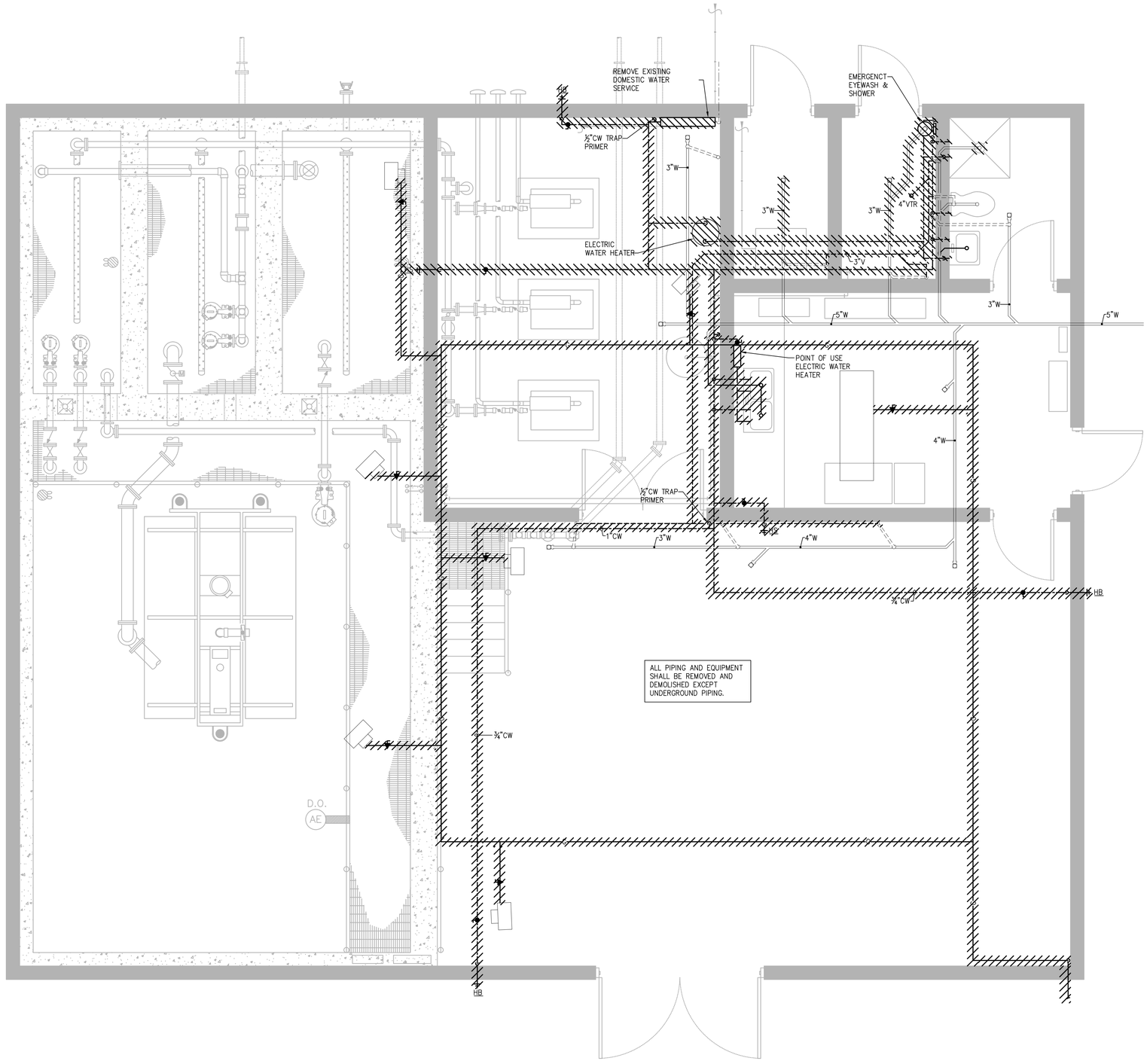

WWTF BUILDING PLAN

SCALE: 3/8"= 1'-0"

PREPARED BY

BETA
www.BETA-Inc.com

REGISTERED PROFESSIONAL

JAMES A. LUCE PLUMBING No. 28990 REGISTERED PROFESSIONAL COMMONWEALTH OF MASSACHUSETTS

SUBCONSULTANT

SAR ENGINEERING, INC.

Mechanical/Electrical Engineers
150 Grossman Drive, Suite 309
Braintree, Massachusetts 02184
617 221-9220
web: www.sar.com

PROJECT

Plymouth Airport Wastewater Treatment Facility Improvements

Plymouth, MA

TITLE

Plumbing Demolition Plan

NO.	REVISIONS	DATE

DRAWN BY:	RLB
DESIGNED BY:	RLB
CHECKED BY:	JAL
ISSUE DATE:	9/30/2022
BETA JOB NO.:	10042

SCALE

AS SHOWN

UNLESS OTHERWISE NOTED OR CHANGED BY REPRODUCTION

SHEET NO.

P-2

9/30/2022 7:10 AM W:\YEAR - 2021\21001.00 - PLYMOUTH AIRPORT WWTF UPGRADES\PLUMBING DEPARTMENT\21001.00 PLUMBING PLANS.DWG (BETA STB BW.STB)

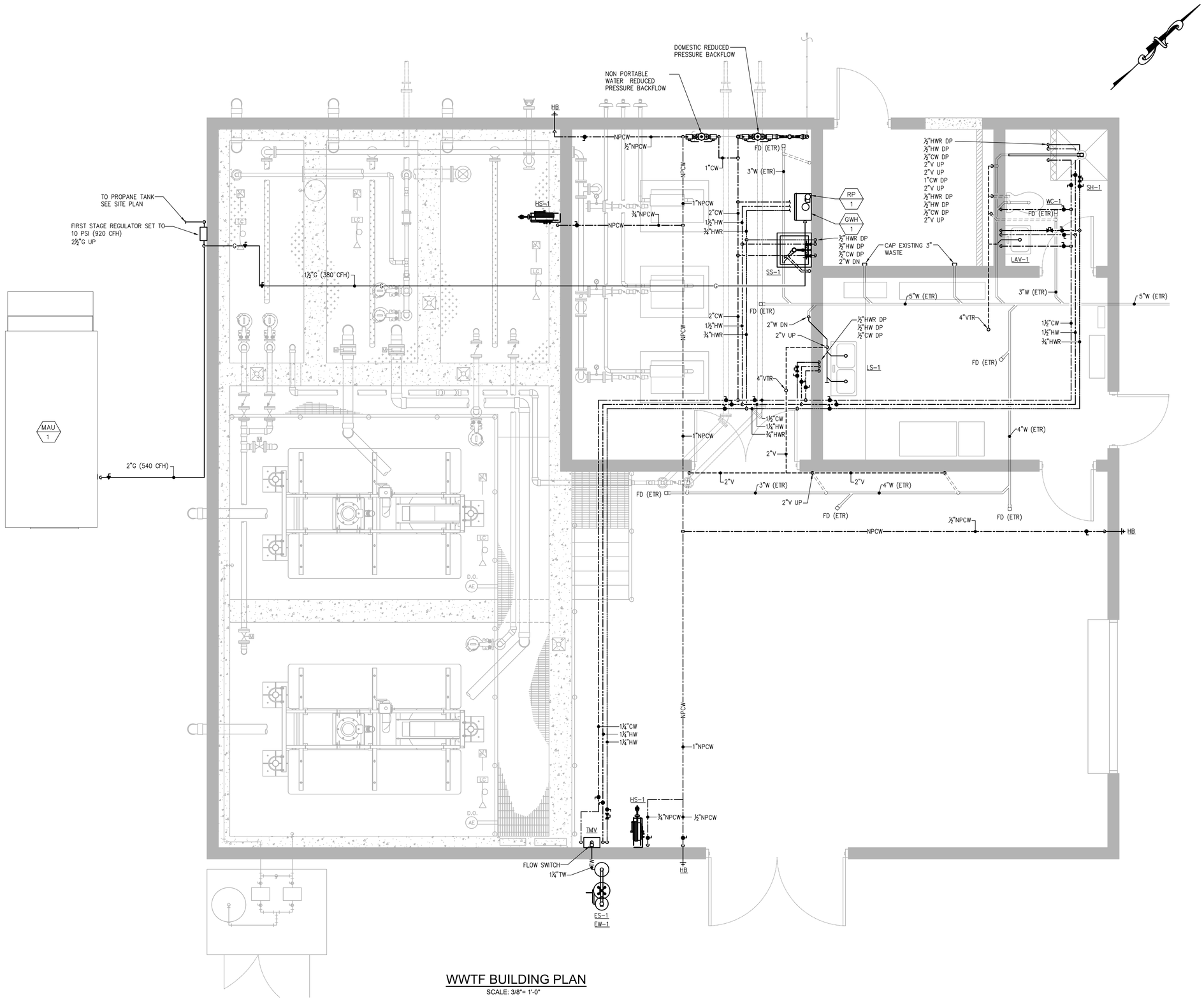

WWTF BUILDING PLAN

SCALE: 3/8"= 1'-0"

PREPARED BY

BETA
www.BETA-Inc.com

REGISTERED PROFESSIONAL

SUBCONSULTANT

SAR ENGINEERING, INC.
Mechanical/Electrical Engineers
150 Grossman Drive, Suite 309
Braintree, Massachusetts 02184
617 221-9220
web: www.sar.com

PROJECT

Plymouth Airport Wastewater Treatment Facility Improvements

Plymouth, MA

TITLE

Plumbing
New Work Plan

NO.	REVISIONS	DATE

DRAWN BY:	RLB
DESIGNED BY:	RLB
CHECKED BY:	JAL
ISSUE DATE:	9/30/2022
BETA JOB NO.:	10042

SCALE

AS SHOWN

UNLESS OTHERWISE NOTED OR CHANGED BY REPRODUCTION

SHEET NO.

P-3

9/30/2022 7:11 AM W:\YEAR - 2021\21001.00 - PLYMOUTH AIRPORT WWTF UPGRADES\PLUMBING DEPARTMENT\21001.00 PLUMBING PLANS.DWG (BETA STB BW.STB)

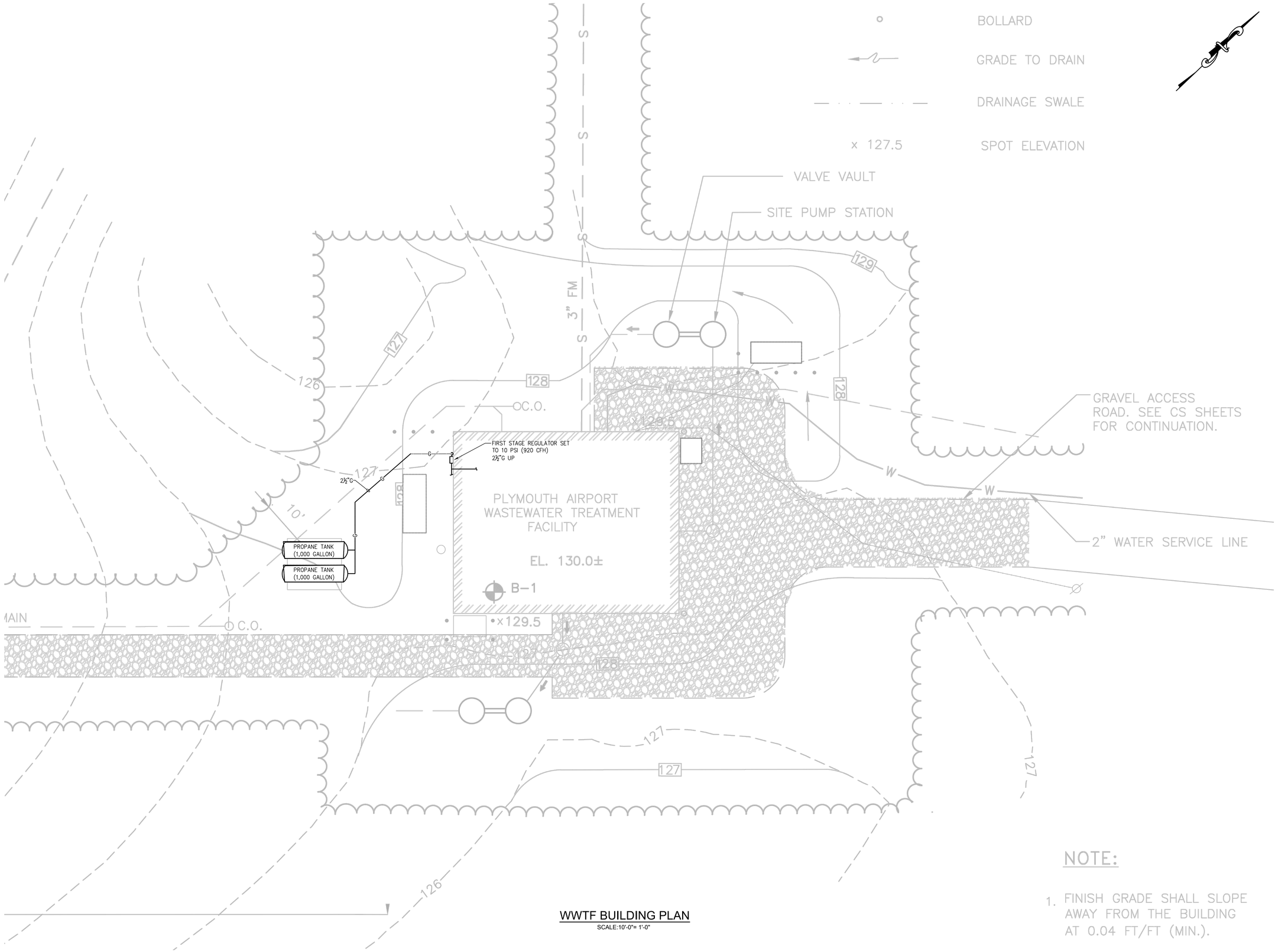

WWTF BUILDING PLAN

SCALE:10'-0"= 1'-0"

NOTE:

1. FINISH GRADE SHALL SLOPE AWAY FROM THE BUILDING AT 0.04 FT/FT (MIN.).

PREPARED BY

BETA
www.BETA-Inc.com

REGISTERED PROFESSIONAL

COMMONWEALTH OF MASSACHUSETTS
JAMES A. LUCE
PLUMBING
No. 35890
REGISTERED PROFESSIONAL ENGINEER

SUBCONSULTANT

SAR ENGINEERING, INC.
Mechanical/Electrical Engineers
150 Grossman Drive, Suite 309
Braintree, Massachusetts 02184
617 221-9220
web: www.sar.com

PROJECT

Plymouth Airport Wastewater Treatment Facility Improvements

Plymouth, MA

TITLE

Plumbing
New Work Site Plan

NO.	REVISIONS	DATE

DRAWN BY:	RLB
DESIGNED BY:	RLB
CHECKED BY:	JAL
ISSUE DATE:	9/30/2022
BETA JOB NO.:	10042

SCALE

AS SHOWN

UNLESS OTHERWISE NOTED OR CHANGED BY REPRODUCTION

SHEET NO.

P-4

9/30/2022 7:11 AM W:\YEAR - 2021\21001.00 - PLYMOUTH AIRPORT WWTF UPGRADES\PLUMBING DEPARTMENT\21001.00 PLUMBING PLANS.DWG (BETA STB BW.STB)

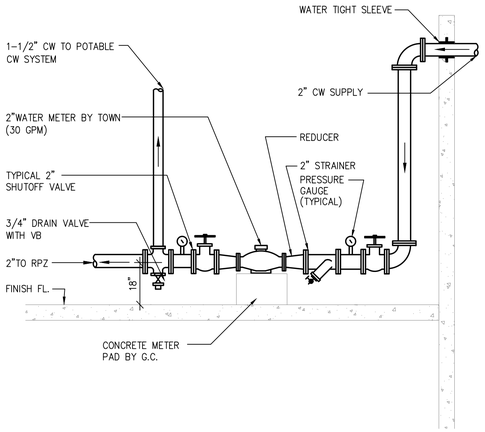

1 DOMESTIC WATER METER DETAIL NTS

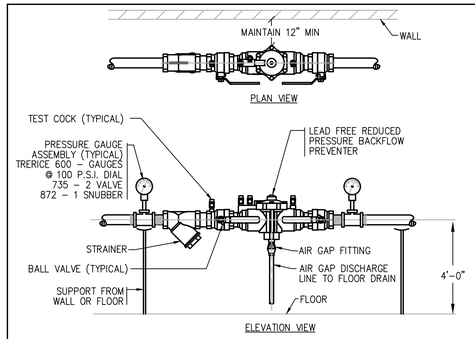

NOTES:
1. REDUCED PRESSURE BACKFLOW PREVENTER SHALL BE APPROVED BY THE DEPARTMENT OF ENVIRONMENTAL PROTECTION AGENCY.
2. BACKFLOW PREVENTER SHALL BE IN COMPLETE ACCORDANCE WITH AUTHORITIES HAVING JURISDICTION. THE PLUMBING CONTRACTOR SHALL SUBMIT PLANS AND DEVICE INFORMATION FOR APPROVAL PRIOR TO INSTALLATION.
3. FURNISH TO OWNER ONE TEST KIT AND SPARE PARTS KIT FOR EACH DEVICE.
4. THIS CONTRACTOR SHALL ACT AS THE OWNERS AGENT IN SEEKING APPROVAL FROM ALL LOCAL AND STATE AUTHORITIES. THIS CONTRACTOR SHALL SUBMIT ALL PLANS, SPECS. AND APPLICATIONS REQUIRED FOR APPROVAL AND PAY ALL FEES.
5. SEE FLOOR PLANS FOR SIZES.
6. MAINTAIN 1'-0" CLEARANCE FROM WALL.

2 REDUCED PRESSURE BACKFLOW DETAIL NTS

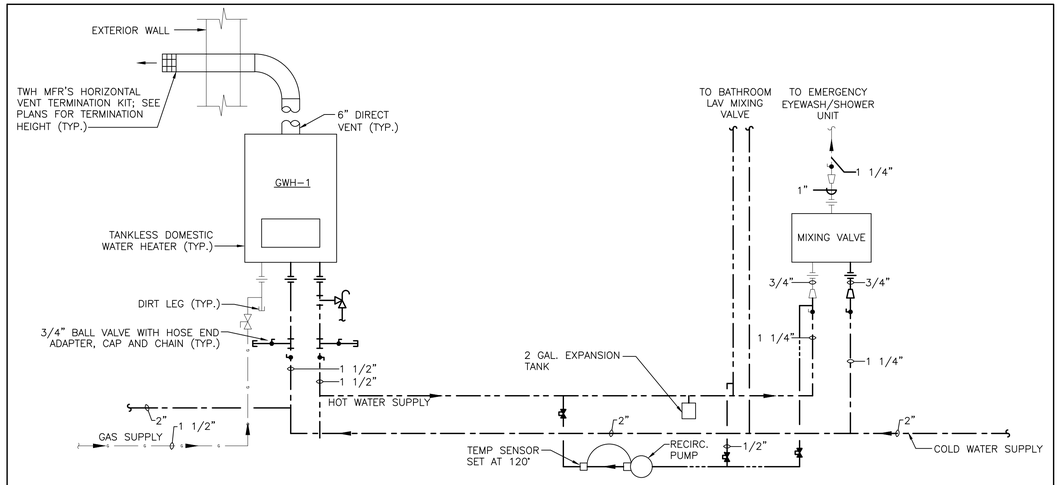

3 TANKLESS GAS FIRED WATER HEATER DIAGRAM NOT TO SCALE

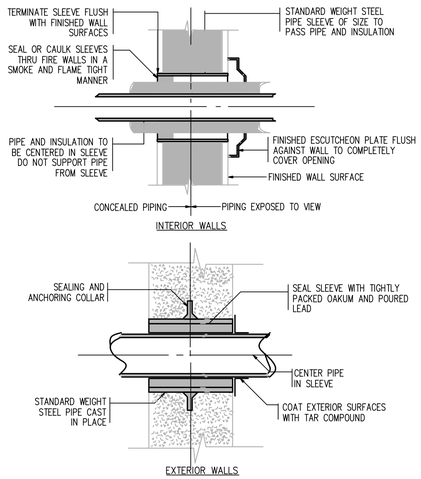

4 PIPING SLEEVE DETAIL NTS

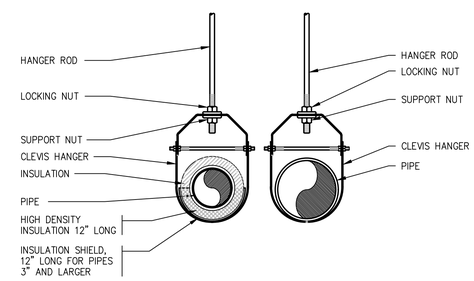

HANGER ROD SCHEDULE	
PIPE SIZE	ROD SIZE
UP TO 2"	3/8" DIA.
2 1/2" THRU 3"	1/2" DIA.
4" AND 5"	5/8"
6" THRU 8"	3/4"
12"	7/8"

HANGER ROD SPACING	
PIPE SIZE	MAX. ALLOWABLE SPACING
1"	7'
1 1/4"	8'
1 1/2"	9'
2"	10'
2 1/2"	11'
3" THRU 8"	12'
10" & 12"	15"

INSULATED AND NON INSULATED PLUMBING SYSTEMS

5 CLEVIS PIPE HANGER DETAIL NTS

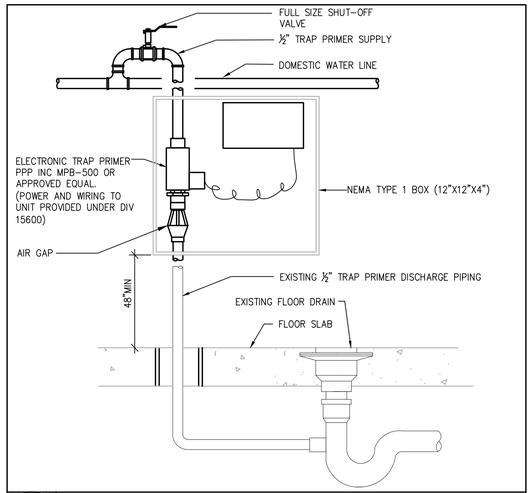

6 TRAP PRIMER DETAIL NTS

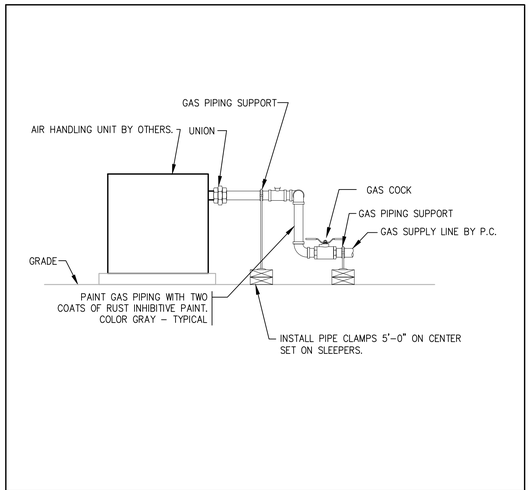

7 MAKE UP AIR UNIT GAS PIPING DETAIL NTS

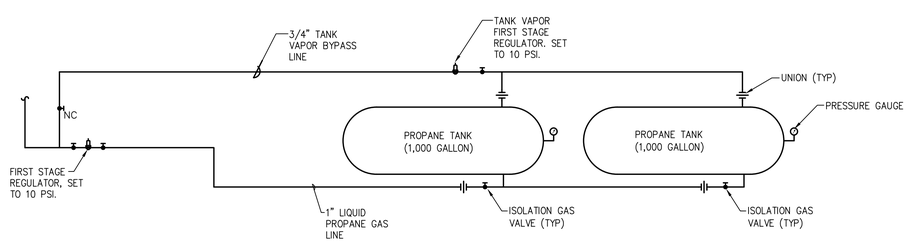

8 PROPANE PIPING SCHEMATIC NTS

PREPARED BY

BETA
www.BETA-Inc.com

REGISTERED PROFESSIONAL

SUBCONSULTANT

SAR ENGINEERING, INC.
Mechanical/Electrical Engineers
150 Grossman Drive, Suite 309
Braintree, Massachusetts 02184
617 221-9220
web: www.sar.com

PROJECT

Plymouth Airport Wastewater Treatment Facility Improvements

Plymouth, MA

TITLE

Plumbing Details

NO.	REVISIONS	DATE

DRAWN BY:	RLB
DESIGNED BY:	RLB
CHECKED BY:	JAL
ISSUE DATE:	9/30/2022
BETA JOB NO.:	10042

SCALE

AS SHOWN

UNLESS OTHERWISE NOTED OR CHANGED BY REPRODUCTION

SHEET NO.

P-5

9/30/2022 7:11 AM W:\YEAR - 2021\21001.00 - PLYMOUTH AIRPORT WWTF UPGRADES\PLUMBING DEPARTMENT\21001.00 PLUMBING PLANS.DWG (BETA STB BW.STB)

ELECTRICAL SYMBOLS

F1 / 1 / a	LINEAR LIGHTING FIXTURES "F1" INDICATES FIXTURE TYPE – TYPICAL FOR ALL FIXTURES "1" INDICATES CIRCUIT NUMBER – TYPICAL FOR ALL FIXTURE "a" INDICATES THE SWITCH CONTROL – TYPICAL FOR ALL FIXTURES
	WALL MOUNTED LIGHTING FIXTURE.
	SURFACE OR PENDANT MOUNTED FIXTURE.
	EMERGENCY EXIT SIGN
	EMERGENCY LIGHTING BATTERY UNIT WITH TWO LIGHT HEADS
	REMOTE EMERGENCY LIGHTING UNIT WITH TWO LIGHTING HEADS PROVIDE 3/4", 2#10, 1#10GND TO NEAREST THE EMEGENCY LIGHTING BATTERY UNIT
S_a	SINGLE POLE SWITCH 120V, 20A "a" INDICATES THE SWITCH CONTROL
S_2	2–POLE SWITCH 120V, 20A 1 POLE FOR ROOM LIGHT FIXTURES, 1–POLE FOR EXHAUST FAN CONTROL
S_{3a}	3–WAY SWITCH 120V, 20A "a" INDICATES THE SWITCH CONTROL
TC	DIGITAL TIME CLOCK SWITCH
1	DUPLEX RECEPTACLE, WEATHER–RESISTANT 120V, 20A WITH WEATHERPROOF COVER "1" INDICATES CIRCUIT NUMBER – TYPICAL FOR ALL RECEPTACLES
	DUPLEX RECEPTACLE 120V, 20A
	(2) DUPLEX (QUAD) RECEPTACLE 120V, 20A
30	UNFUSED DISCONNECT SWITCH, "30" INDICATES 30 AMP RATING, PROVIDE 3–POLE UNLESS OTHERWISE INDICATED.
F 20	FUSED DISCONNECT SWITCH, "20" INDICATES 20 AMP FUSE RATING, PROVIDE 3–POLE UNLESS OTHERWISE INDICATED.
	3–PHASE RECEPTACLE
MCP / FVNR	WALL MOUNTED COMBINATION MOTOR STARTER WITH MOTOR CIRCUIT PROTECTOR, "FVNR" INDICATES TYPE OF MOTOR STARTER
VFD	ENCLOSED VARIABLE FREQUENCY DRIVE
Sm	MANUAL MOTOR STARTER 120V, 20A
J	JUNCTION BOX
HH	HAND HOLE
AR1	ALARM RELAY, "AR1" REFERS TO RELAY NAME DESIGNATION
CR1	CONTROL RELAY, "CR1" REFERS TO RELAY NAME DESIGNATION
M	MOTOR START RELAY
TR1	TIMING RELAY, "TR1" REFERS TO RELAY NAME DESIGNATION
	NORMALY OPEN RELAY CONTACT
	NORMALLY CLOSED RELAY CONTACT
	OPERATOR PUSH BUTTON NORMALLY OPEN CONTACT
	OPERATOR PUSH BUTTON NORMALLY CLOSED CONTACT
	PRESSURE SWITCH – CLOSES ON HIGH PRESSURE
	PRESSURE SWITCH – CLOSES ON LOW PRESSURE
	LIMIT SWITCH – CLOSES ON POSITION BEING MADE
	CLOSES SWITCH – OPENS ON POSITION BEING MADE

ELECTRICAL SYMBOLS

	UNDERGROUND CONDUIT DUCT BANK
PP1(1)	HOMERUN DESIGNATION TO PANEL PP1 CIRCUIT #1, WITH THE FOLOWING CONDUIT/WIRES UNLESS OTHERWISE NOTED: • 3/4"C WITH 2#12, 1#12GND FOR 20AMP SINGLE PHASE CIRCUITS. • 3/4"C WITH 3#12, 1#12GND FOR 20AMP THREE PHASE CIRCUITS. • 3/4"C WITH 2#10, 1#10GND FOR 30AMP SINGLE PHASE CIRCUITS. • 3/4"C WITH 3#10, 1#10GND FOR 30AMP THREE PHASE CIRCUITS. • 3/4"C WITH 2#8, 1#10GND FOR 40AMP & 50AMP SINGLE PHASE CIRCUITS. • 3/4"C WITH 3#8, 1#10GND FOR 40AMP & 50AMP THREE PHASE CIRCUITS.
	EYS TYPE CONDUIT SEAL
SPD	SURGE PROTECTION DEVICE
	UTILITY POLE
20 / 100 / LSIG	MOLDED CASE CIRCUIT BREAKER, 3–POLE UNLESS OTHERWISE INDICATED, "20" INDICATES TRIP AMPERE RATING, "100" INDICATES FRAME SIZE, "LSIG" LONG, SHORT, INSTANTANEOUS AND GROUND FAULT PROTECTION RESPECTIVELY "GFI" GROUND FAULT PROTECTION
	DRY TYPE TRANSFORMER
EH	ELECTRIC HAND HOLE (REFER TO SITE DETAILS)
	3/4"ø X 10'–0" COPPER CLAD GROUND ROD
	BUILDING GROUNDING SYSTEM
10	MOTOR, "10" INDICATES HORSEPOWER RATING
XX	CABLE/CONDUIT DESIGNATION, "XX" REFERS CABLE CONDUIT REFERENCE, REFER TO CABLE/CONDUIT SCHEDULES.
HS–XXXX	EMGERGENCY STOP OR HAND SWITCH (SUPPLIED BY DIV. 16), "XXXX" REFERS TO TAGNAME ID
OS–XXXX	OPERATOR STATION (SUPPLIED BY OTHER DIV. 17), "XXXX" REFERS TO TAGNAME ID
XX–XXXX	UNLESS OTHERWISE NOTED INSTRUMENATION OR PROCESS EQUIPMENT (SUPPLIED BY OTHER DIVISIONS) "XX–XXXX" REFERS TO TAGNAME ID
E	GENERATOR EMERGENCY STOP
O	OCCUPIED/UNOCCUPIED SELECTOR SWITCH. (SUPPLIED BY DIV. 15)
UI	HVAC RTU REMOTE USER INTERFACE (SUPPLIED BY DIV. 15)
T	THERMOSTAT (SUPPLIED BY DIV. 15)
M	MOTOR OPERATED DAMPER (SUPPLIED BY DIV. 15)

ELECTRICAL SYMBOLS

DS	MAGNETIC DOOR SWITCH
KP	SECURITY SYSTEM KEY PAD
HC	HELP CALL PUSHBUTTON
FS	EMERGENCY SHOWER FLOW SWITCH (PROVIDED BY DIV. 15)
H	HEAT DETECTOR, COMBINATION RATE–OF–RISE AND FIXED TEMPERATURE
SACP	SECURITY ALARM CONTROL PANEL
	CELLULAR ANTENNA

ABBREVIATIONS

(2)1"C, 3#8, #10GND	2, 1–INCH CONDUITS EACH CONDUIT CONTAINING 3–#8 AWG WIRES AND 1–#10 GROUND CONDUCTOR
3/4" CE	EMPTY CONDUIT. NUMERAL DENOTES SIZE
AFF	ABOVE FINISHED FLOOR
AFG	ABOVE FINISHED GRADE
AR	ALARM RELAY
ATS	AUTOMATIC TRANSFER SWITCH
CR	CONTROL RELAY
CP	CONTROL PANEL
DRG. DWG.	DRAWING
EAN	EXCEPT AS NOTED
EC	ELECTRICAL CONTRACTOR
ETM	ELAPSED TIME METER
FE	FLOW ELEMENT
FIT	FLOW INDICATOR TRANSMITTER
FS	FLOW SWITCH
FT	FLOW TRANSMITTER
FVNR	FULL VOLTAGE NON–REVERSING
GND, GRD	GROUNDING CONDUCTOR (EQUIPMENT)
HOA	HAND–OFF–AUTOMATIC
HH	HANDHOLE
ISP	INTRINSICALLY SAFE PANEL (PROVIDED BY DIV. 13)
J OR JB	JUNCTION BOX
JPB	JOG PUSHBUTTON
LE	LEVEL ELEMENT
LIT	LEVEL INDICATOR TRANSMITTER
LL	LOW LEVEL
LS	LEVEL SWITCH
LT	LEVEL TRANSMITTER
MCC	MOTOR CONTROL CENTER
MH	MANHOLE
MFR	MANUFACTURER
MOV	MOTOR OPERATED VAVLE
NTS	NOT TO SCALE
OEM	ORGINAL EQUIPMENT MANUFACTURE PROVIDED
OH	OVERHEAD
OL	MOTOR OVERLOAD HEATER
PB	PUSHBUTTON CONTROL STATION MOMENTARY CONTACT TYPE, STOP START
PBL	PUSHBUTTON CONTROL STATION MOMENTARY TYPE WITH LOCK–OUT DEVICE, STOP–START
PBM	PUSHBUTTON CONTROL STATION MAINTAINED CONTACT TYPE, STOP START
PIT	PRESSURE INDICATOR TRANSMITTER
PL	PUSHBUTTON CONTROL STATION MOMENTARY TYPE WITH LOCK–OUT DEVICE, STOP
PS	PRESSURE SWITCH
PT	PRESSURE TRANSMITTER
RGS	RIGID GALVANIZED STEEL
SPD	SURGE SUPPRESSOR DEVICE
SOV	SOLENOID VALVE
S/S	SOFT STARTER
TB	TERMINAL BOX
TD	MOTOR TEMPERATURE DETECTOR
TR	TIMING RELAY
TS	TEMPERATURE SWITCH
TSP	TWISTED SHEILDED PAIR
TSTW	TWO SPEED TWO WINDING
TYP	TYPICAL
UG	UNDERGROUND
VFD	VARIABLE FREQUENCY DRIVE
WP	WATER PROOF

GENERAL NOTES

1. GENERAL CONTRACTOR TO PROVIDE CONCRETE HOUSEKEEPING PADS ON ALL FLOOR OR GRADE MOUNTED ELECTRICAL EQUIPMENT, THE FOLLOWING EQUIPMENT IS THE MINIMUM REQUIREMENT FOR HOUSEKEEPING PADS. ADDITIONAL PADS MAYBE REQUIRED BASED ON THE MOUNTING METHODS.
   1.1. GENERATOR
   1.2. DRY TYPE TRANSFORMER
2. ALL CONDUIT AND EQUIPMENT SHALL BE INSTALLED AND GROUNDED IN ACCORDANCE WITH THE LATEST EDITION OF THE NATIONAL ELECTRICAL CODE AND APPLICABLE LOCAL CODES.
3. BACK BOXES SHALL BE RECESSED INTO WALLS, RACEWAYS SHALL BE INSTALLED IN WALLS WHERE POSSIBLE AND ABOVE SUSPENDED CEILING, ONLY VERTICAL RUNS OF RACEWAY SHALL BE ALLOWED TO BE EXPOSED.
4. BONDING JUMPERS, CONDUIT CLAMPS AND POINTS OF ATTACHMENT ARE NOT SHOWN ON DRAWINGS. SIZE BONDING JUMPERS IN ACCORDANCE WITH THE NATIONAL ELECTRICAL CODE. THE POINTS OF ATTACHMENT OF THE GROUND CLAMPS SHALL BE IN ACCESSIBLE LOCATIONS.
5. EQUIPMENT & CONDUIT INSTALLATIONS ARE SHOWN DIAGRAMMATICALLY ONLY AND SHALL BE INSTALLED IN A MANNER TO PREVENT CONFLICTS WITH EQUIPMENT AND STRUCTURAL CONDITIONS. EXPOSED CONDUITS SHALL BE INSTALLED PARALLEL TO BEAMS AND WALLS.
6. CONDUITS SHALL BE TERMINATED SO AS TO PERMIT NEAT CONNECTIONS TO MOTORS AND OTHER EQUIPMENT.
7. NO CONDUIT SMALLER THAN 3/4" PIPE SIZE NOR WIRE SMALLER THAN NO. 12 A.W.G. SHALL BE USED UNLESS OTHERWISE NOTED.
8. RECEPTACLES AND SWITCHES SHALL BE MOUNTED 45" ABOVE FINISHED FLOOR.
9. THE WIRING AND BLOCK DIAGRAMS, QUANTITY AND SIZE OF WIRES AND CONDUIT REPRESENT A SUGGESTED ARRANGEMENT BASED UPON SELECTED STANDARD COMPONENTS OF ELECTRICAL AND PROCESS EQUIPMENT. MODIFICATIONS ACCEPTABLE TO THE ENGINEER MAY BE MADE BY THE CONTRACTOR TO ACCOMMODATE EQUIPMENT ACTUALLY PURCHASED. THE BASIC SEQUENCE AND METHOD OF CONTROL MUST BE MAINTAINED AS INDICATED ON THE DRAWINGS AND/OR SPECIFICATIONS.
10. THE ELECTRICAL CONTRACTOR SHALL COORDINATE WITH EVERSOURCE FOR DISCONNECTION AND RECONNECTINO OF ELECTRICAL SERVICE.

DEMOLITION NOTES

1. UNLESS OTHERWISE NOTED, ALL EXISTING ELECTRICAL SYSTEMS WITHIN HATCH MARKS AND ASSOCIATED EQUIPMENT IS TO BE DEMOLISHED. DISCONNECT AND DE–ENERGIZE THE EQUIPMENT. REMOVE THE EQUIPMENT TO BE DEMOLISHED PER SECTION 02050. ALL CONDUIT, CABLING, BOXES, SUPPORTS, ETC, ASSOCIATED WITH THE DEMOLISHED EQUIPMENT SHALL BE REMOVED. THE EXPOSED CONDUIT AND SHALL BE REMOVED BACK TO SOURCE, ALL CABLING SHALL BE REMOVED BACK TO SOURCE.
2. NO DEVICE OR EQUIPMENT INDICATED FOR DEMOLITION WILL BE REUSED OR SALVAGED UNLESS SPECIFICALLY NOTED AS SUCH. ALL EQUIPMENT REMOVED SHALL BE REMOVED FROM SITE AND PROPERLY DISPOSED OF, PRIOR TO REMOVAL OF EQUIPMENT COORDINATE WITH OWNER FOR ANY EQUIPMENT THE OWNER WILL KEEP.
3. EXISTING EQUIPMENT INDICATED ON THE DEMOLITION PLANS ARE BASED ON SITE OBSERVATIONS AND IT IS NOT THE INTENTION OF THESE DRAWINGS TO SHOW ALL EQUIPMENT AND MATERIALS TO BE DISCONNECTED AND/OR REMOVED.

PREPARED BY

BETA
www.BETA-Inc.com

REGISTERED PROFESSIONAL

COMMONWEALTH OF MASSACHUSETTS
MICHAEL J. COTTER
ELECTRICAL
No. 40999
REGISTERED PROFESSIONAL ENGINEER

SUBCONSULTANT

SAR ENGINEERING, INC.
Mechanical/Electrical Engineers
150 Grossman Drive, Suite 309
Braintree, Massachusetts 02184
617 221-9220
web: www.sar.com

PROJECT

Plymouth Airport Wastewater Treatment Facility Improvements

Plymouth, MA

TITLE

Electrical Legend and General Notes

NO.	REVISIONS	DATE

DRAWN BY:	RLB
DESIGNED BY:	RLB
CHECKED BY:	MC
ISSUE DATE:	9/30/2022
BETA JOB NO.:	10042

SCALE

NONE

UNLESS OTHERWISE NOTED OR CHANGED BY REPRODUCTION

SHEET NO.

E-1

9/30/2022 7:28 AM W:\YEAR - 2021\21001 00 - PLYMOUTH AIRPORT WWTF UPGRADES\ELECTRICAL DEPARTMENT\21001 00 ELECTRICAL PLANS.DWG (BETA STB BW.STB)

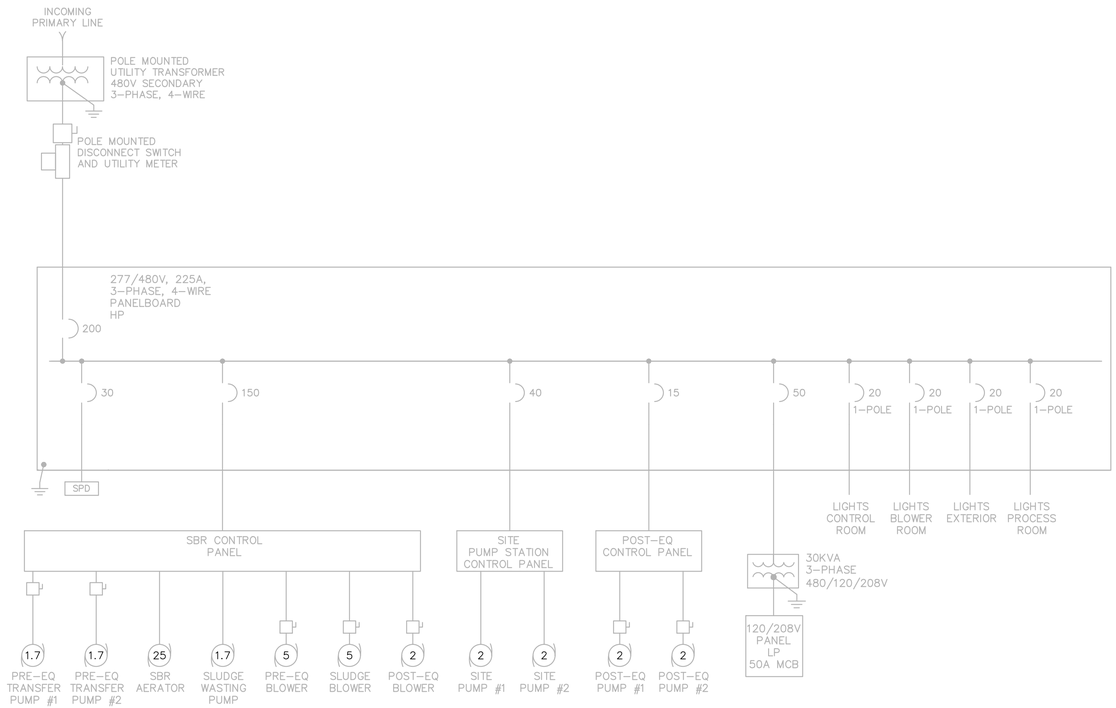

ONE LINE DIAGRAM - DEMOLITION

NOT TO SCALE

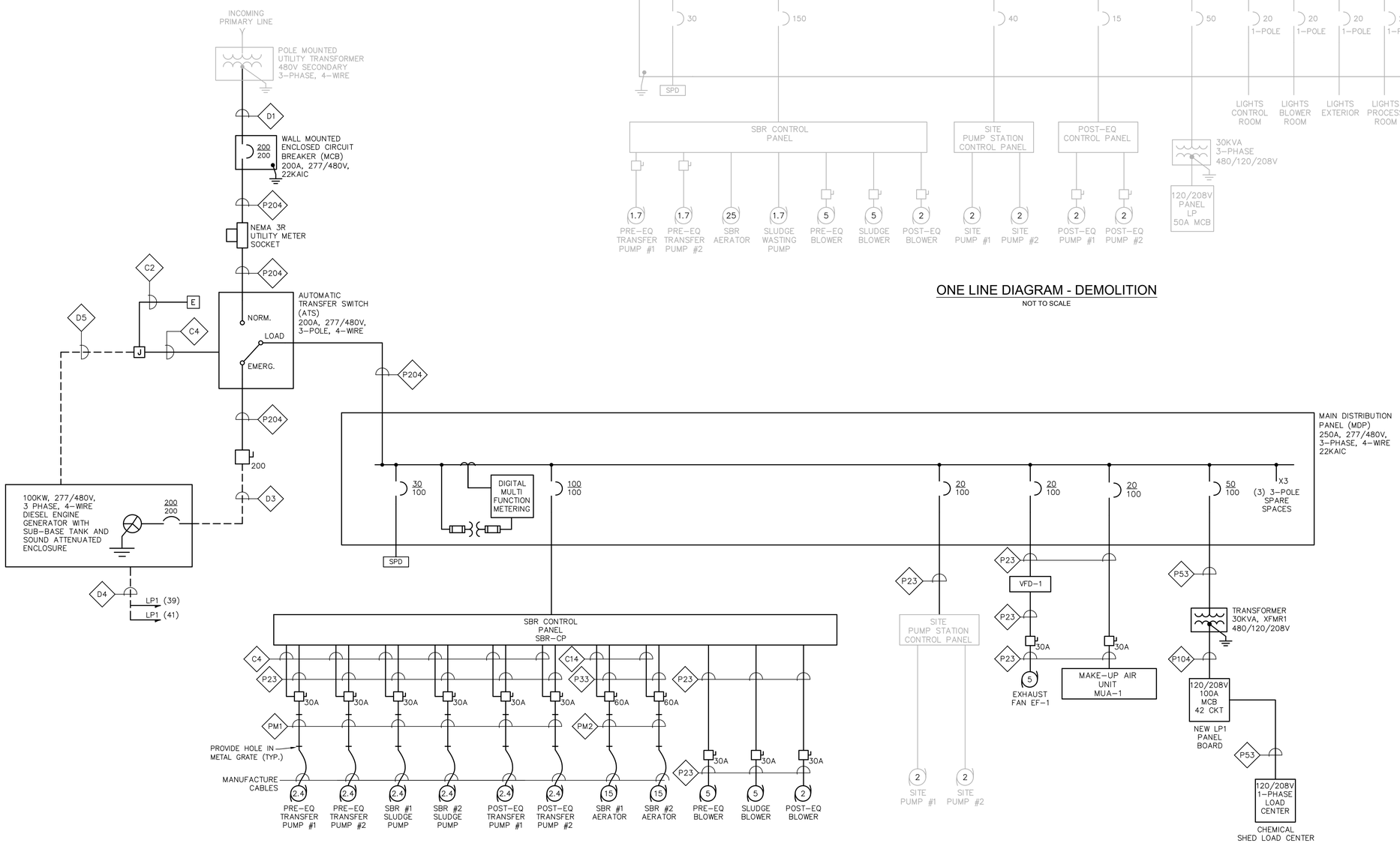

ONE LINE DIAGRAM

NOT TO SCALE

PREPARED BY

BETA
www.BETA-Inc.com

REGISTERED PROFESSIONAL

COMMONWEALTH OF MASSACHUSETTS
MICHAEL J. COTTER
ELECTRICAL
No. 40999
REGISTERED PROFESSIONAL ENGINEER

SUBCONSULTANT

SAR ENGINEERING, INC.
Mechanical/Electrical Engineers
150 Grossman Drive, Suite 309
Braintree, Massachusetts 02184
617 221-9220
web: www.sar.com

PROJECT

Plymouth Airport Wastewater Treatment Facility Improvements

Plymouth, MA

TITLE

Electrical
One Line Diagrams

NO.	REVISIONS	DATE

DRAWN BY:	RLB
DESIGNED BY:	RLB
CHECKED BY:	MC
ISSUE DATE:	9/30/2022
BETA JOB NO.:	10042

SCALE

NONE

UNLESS OTHERWISE NOTED OR CHANGED BY REPRODUCTION

SHEET NO.

E-2

9/30/2022 7:28 AM W:\YEAR - 2021\21001.00 - PLYMOUTH AIRPORT WWTF UPGRADES\ELECTRICAL DEPARTMENT\21001.00 ELECTRICAL PLANS.DWG (BETA STB BW.STB)

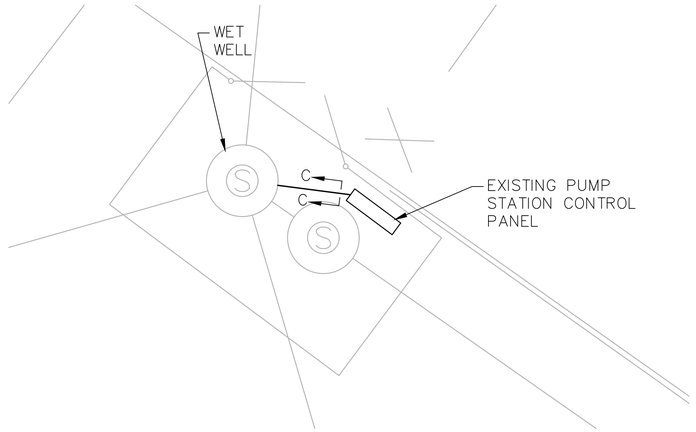

NORTHEAST PUMP STATION SITE PLAN

SCALE: 1"= 5'-0"

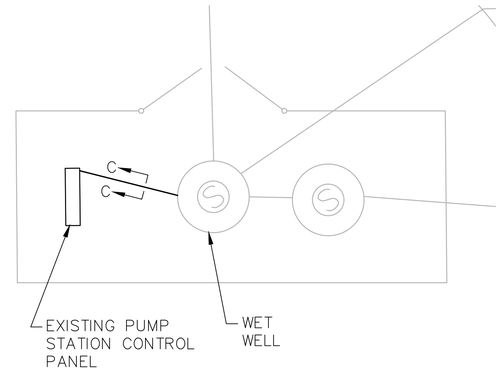

CENTRAL PUMP STATION SITE PLAN

SCALE: 1"= 5'-0"

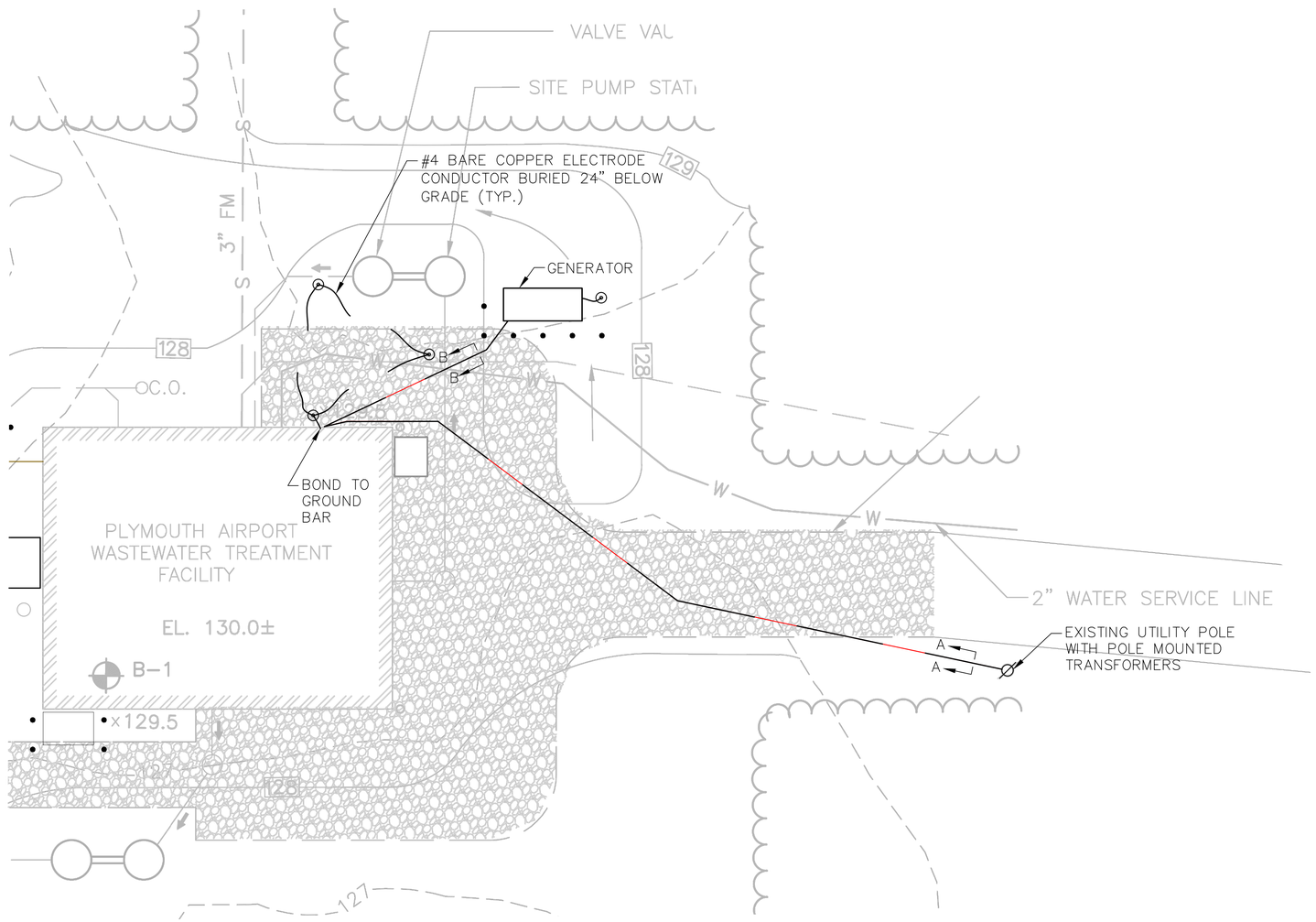

WASTERWATER TREATMENT PLANT SITE PLAN

SCALE: 1"= 10'-0"

PREPARED BY

BETA
www.BETA-Inc.com

REGISTERED PROFESSIONAL

COMMONWEALTH OF MASSACHUSETTS
MICHAEL J. COTTER
ELECTRICAL
No. 40999
REGISTERED PROFESSIONAL ENGINEER

SUBCONSULTANT

SAR ENGINEERING, INC.

Mechanical/Electrical Engineers
150 Grossman Drive, Suite 309
Braintree, Massachusetts 02184
617 221-9220
web: www.sar.com

PROJECT

Plymouth Airport Wastewater Treatment Facility Improvements

Plymouth, MA

TITLE

Electrical Site Plans

NO.	REVISIONS	DATE

DRAWN BY:	RLB
DESIGNED BY:	RLB
CHECKED BY:	MC
ISSUE DATE:	9/30/2022
BETA JOB NO.:	10042

SCALE

AS SHOWN

UNLESS OTHERWISE NOTED OR CHANGED BY REPRODUCTION

SHEET NO.

E-3

9/30/2022 7:29 AM W:\YEAR - 2021\21001.00 - PLYMOUTH AIRPORT WWTF UPGRADES\ELECTRICAL DEPARTMENT\21001.00 ELECTRICAL PLANS.DWG (BETA STB BW.STB)

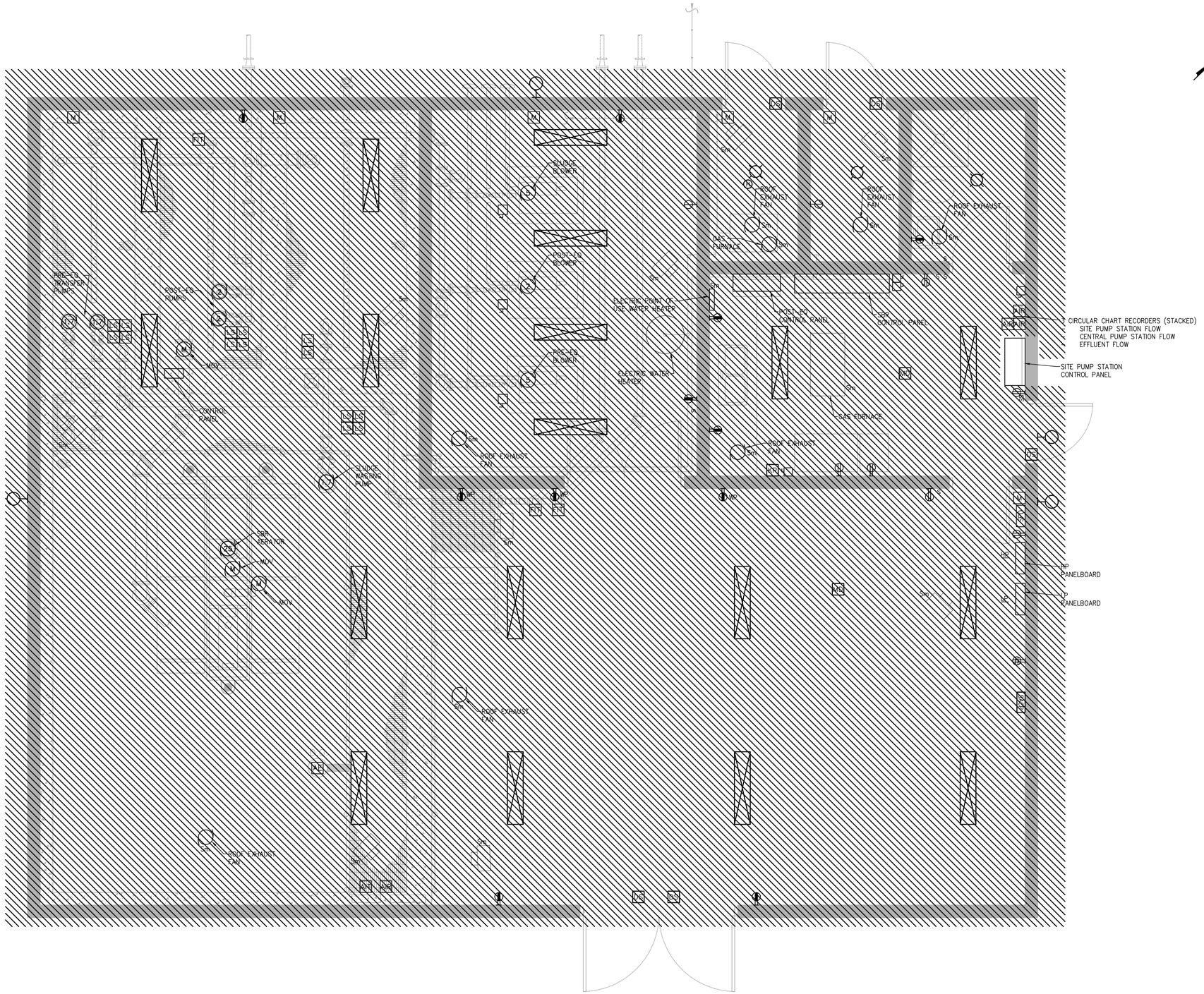

DEMOLITION PLAN

SCALE: 3/8"= 1'-0"

PREPARED BY

BETA
www.BETA-Inc.com

REGISTERED PROFESSIONAL

COMMONWEALTH OF MASSACHUSETTS
MICHAEL J. COTTER
ELECTRICAL
No. 40999
REGISTERED PROFESSIONAL ENGINEER

SUBCONSULTANT

SAR ENGINEERING, INC.

Mechanical/Electrical Engineers
150 Grossman Drive, Suite 309
Braintree, Massachusetts 02184
617 221-9220
web: www.sar.com

PROJECT

Plymouth Airport Wastewater Treatment Facility Improvements

Plymouth, MA

TITLE

Electrical Demolition Plan

NO.	REVISIONS	DATE

DRAWN BY:	RLB
DESIGNED BY:	RLB
CHECKED BY:	MC
ISSUE DATE:	9/30/2022
BETA JOB NO.:	10042

SCALE

AS SHOWN

UNLESS OTHERWISE NOTED OR CHANGED BY REPRODUCTION

SHEET NO.

E-4

9/30/2022 7:29 AM W:\YEAR - 2021\21001.00 - PLYMOUTH AIRPORT WWTF UPGRADE\SELECTRICAL DEPARTMENT\21001.00 ELECTRICAL PLANS.DWG (BETA STB BW.STB)

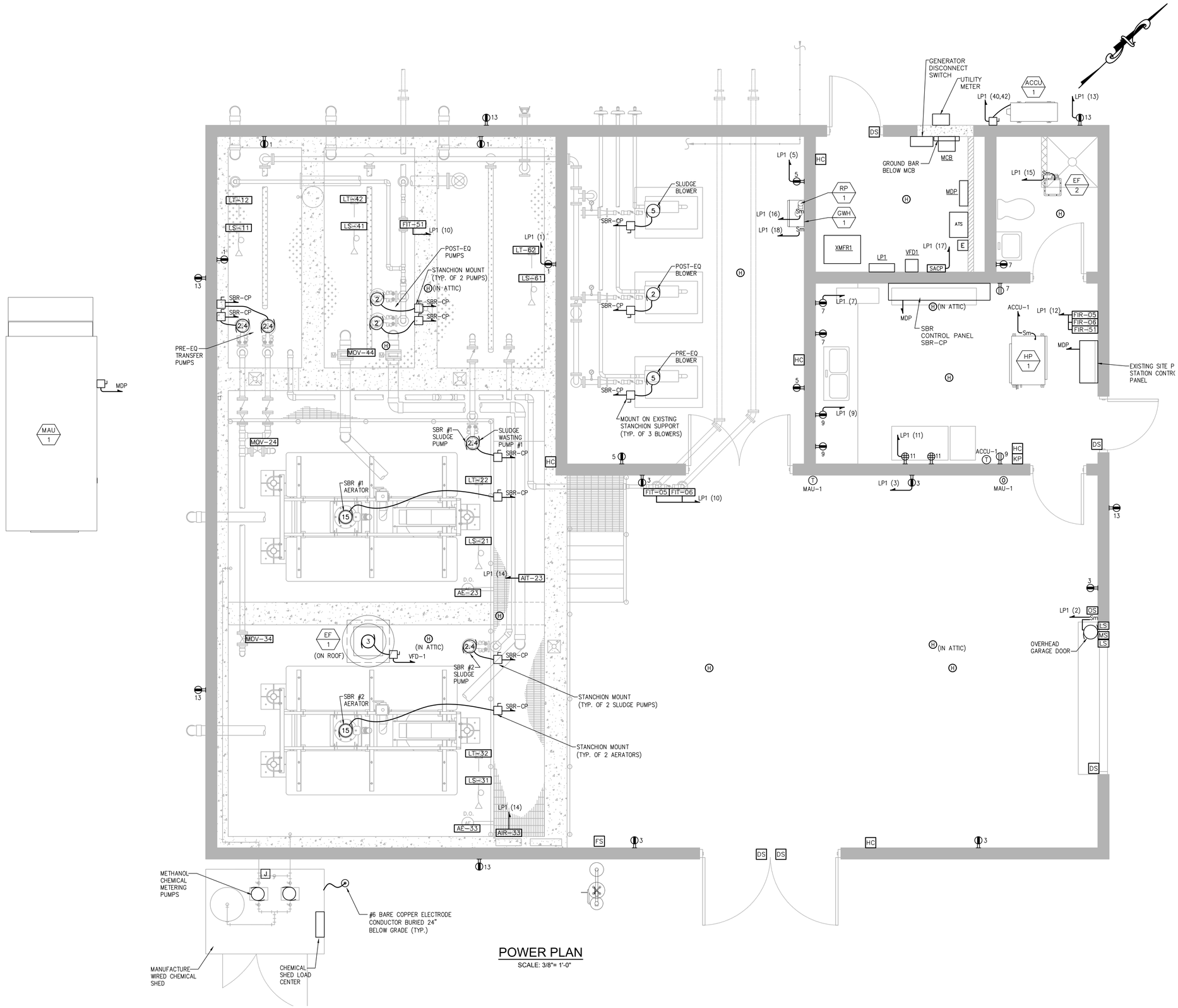

POWER PLAN

SCALE: 3/8"= 1'-0"

PREPARED BY

BETA
www.BETA-Inc.com

REGISTERED PROFESSIONAL

COMMONWEALTH OF MASSACHUSETTS
MICHAEL J. COTTER
ELECTRICAL
No. 40999
REGISTERED PROFESSIONAL ENGINEER

SUBCONSULTANT

SAR ENGINEERING, INC.
Mechanical/Electrical Engineers
150 Grossman Drive, Suite 309
Braintree, Massachusetts 02184
617 221-9220
web: www.sar.com

PROJECT

Plymouth Airport Wastewater Treatment Facility Improvements

Plymouth, MA

TITLE

Electrical Power Plan

NO.	REVISIONS	DATE

DRAWN BY:	RLB
DESIGNED BY:	RLB
CHECKED BY:	MC
ISSUE DATE:	9/30/2022
BETA JOB NO.:	10042

SCALE

AS SHOWN

UNLESS OTHERWISE NOTED OR CHANGED BY REPRODUCTION

SHEET NO.

E-5

9/30/2022 7:29 AM W:\YEAR - 2021\21001.00 - PLYMOUTH AIRPORT WWTF UPGRADES\ELECTRICAL DEPARTMENT\21001.00 ELECTRICAL PLANS.DWG (BETA STB BW.STB)

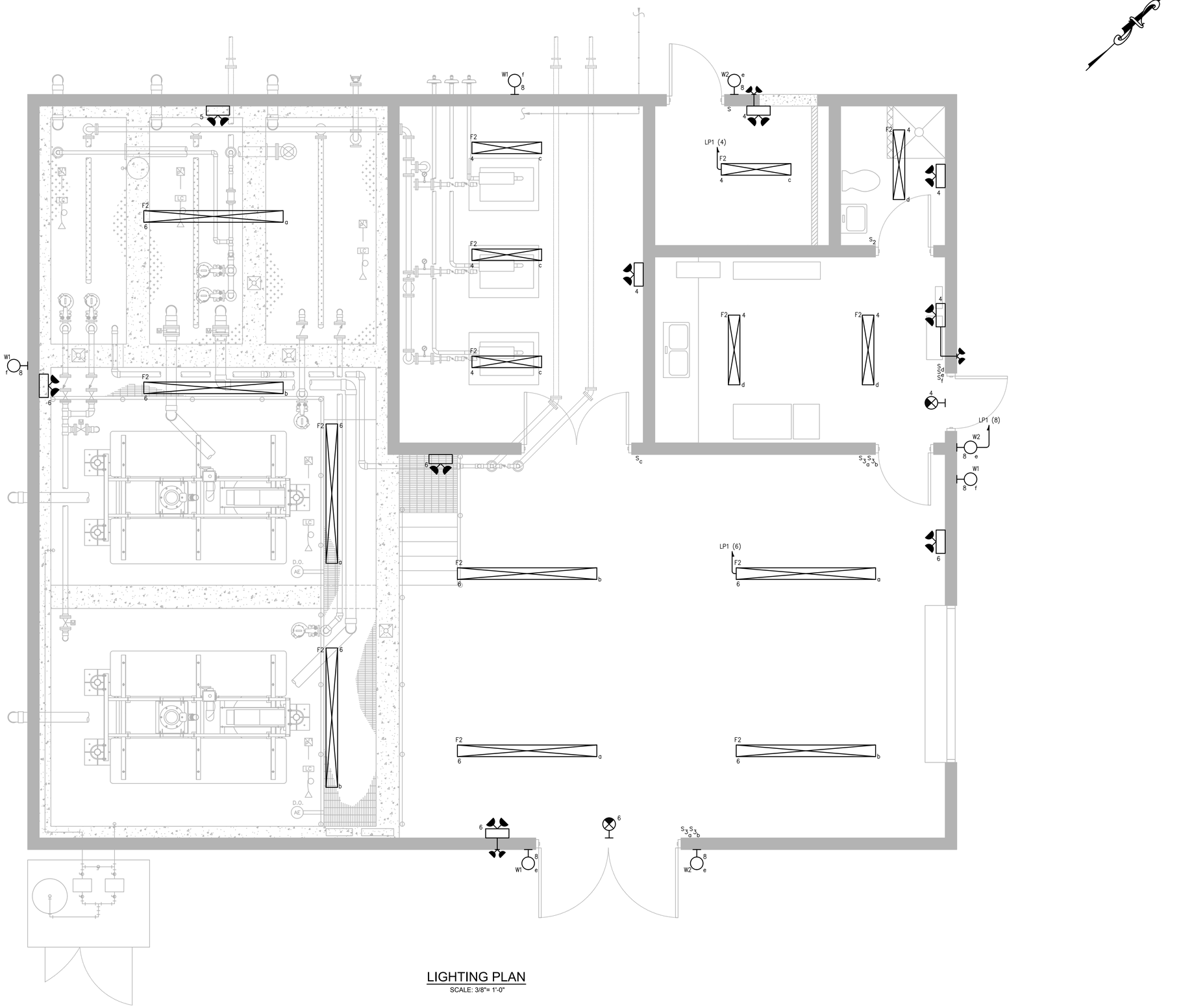

LIGHTING PLAN

SCALE: 3/8"= 1'-0"

PREPARED BY

BETA
www.BETA-Inc.com

REGISTERED PROFESSIONAL

COMMONWEALTH OF MASSACHUSETTS
MICHAEL J. COTTER
ELECTRICAL
No. 40999
REGISTERED PROFESSIONAL ENGINEER

SUBCONSULTANT

SAR ENGINEERING, INC.

Mechanical/Electrical Engineers
150 Grossman Drive, Suite 309
Braintree, Massachusetts 02184
617 221-9220
web: www.sar.com

PROJECT

Plymouth Airport Wastewater Treatment Facility Improvements

Plymouth, MA

TITLE

Electrical Lighting Plan

NO.	REVISIONS	DATE

DRAWN BY:	RLB
DESIGNED BY:	RLB
CHECKED BY:	MC
ISSUE DATE:	9/30/2022
BETA JOB NO.:	10042

SCALE

AS SHOWN

UNLESS OTHERWISE NOTED OR CHANGED BY REPRODUCTION

SHEET NO.

E-6

9/30/2022 7:29 AM W:\YEAR - 2021\21001.00 - PLYMOUTH AIRPORT WWTF UPGRADES\ELECTRICAL DEPARTMENT\21001.00 ELECTRICAL PLANS.DWG (BETA STB BW.STB)

CONTROL BLOCK WIRING DIAGRAM FLOW METERS

NOT TO SCALE

TYPICAL FOR:

- FIT-05/FIR-05
- FIT-06/FIR-06
- FIT-51/FIR-51

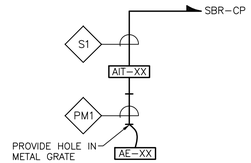

CONTROL BLOCK WIRING DIAGRAM ANALYZERS

NOT TO SCALE

TYPICAL FOR:

- AE-23/AIT-23/AIR-23
- AE-33/AIT-33/AIR-33

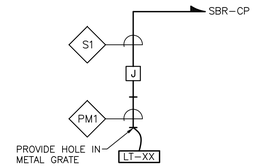

CONTROL BLOCK WIRING DIAGRAM LEVEL FLOAT SWITCHES

NOT TO SCALE

TYPICAL FOR:

- LT-12
- LT-22
- LT-32
- LT-42
- LT-62

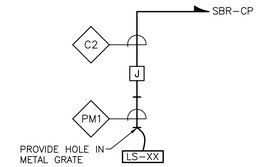

CONTROL BLOCK WIRING DIAGRAM LEVEL FLOAT SWITCHES

NOT TO SCALE

TYPICAL FOR:

- LS-11
- LS-21
- LS-31
- LS-41
- LS-61

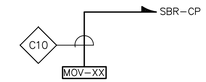

CONTROL BLOCK WIRING DIAGRAM MOTORIZED OPERATORED VALVES

NOT TO SCALE

TYPICAL FOR:

- MOV-24
- MOV-34
- MOV-44

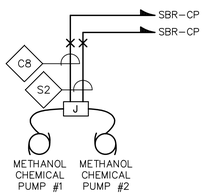

CONTROL BLOCK WIRING DIAGRAM METHANOL CHEMICAL PUMPS

NOT TO SCALE

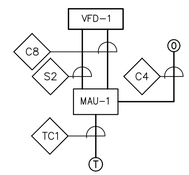

MAU-1 BLOCK WIRING DIAGRAM

NOT TO SCALE

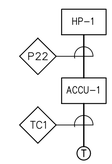

ACCU-1 BLOCK WIRING DIAGRAM

NOT TO SCALE

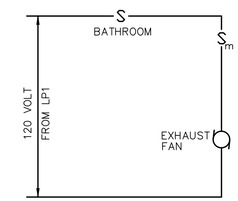

– PROVIDE ALL INTERCONNECTING CONDUIT/CABLE

EF-2 EXHAUST FAN WIRING DIAGRAM

NOT TO SCALE

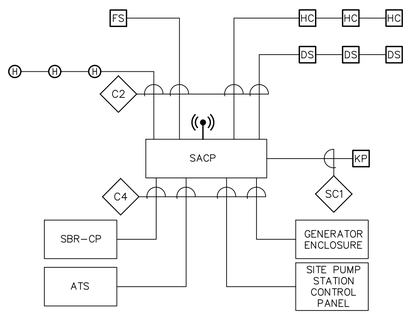

NOTES:

1. RISER DIAGRAM ONLY REPRESENTS TYPE OF DEVICES AND DOES NOT REPRESENT ACTUAL QUANTITIES. REFER TO PLAN DRAWINGS QUANTITIES AND LOCATIONS OF DEVICES.
2. MINIMUM SIZE CONDUIT SHALL BE 3/4" UNLESS NOTED OTHERWISE.
3. SYSTEM CONDUIT/CABLING SHALL BE INSTALLED IN ACCORDANCE WITH EQUIPMENT SUPPLIERS APPROVED SHOP DRAWINGS AND WIRING DIAGRAMS.

SECURITY SYSTEM RISER

NOT TO SCALE

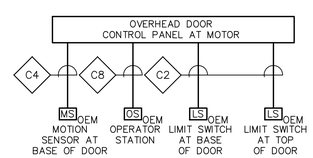

CONTROL BLOCK WIRING DIAGRAM OVERHEAD DOOR

NOT TO SCALE

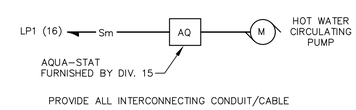

CONTROL BLOCK WIRING DIAGRAM DOMESTIC HOT WATER CIRCULATING PUMP

NOT TO SCALE

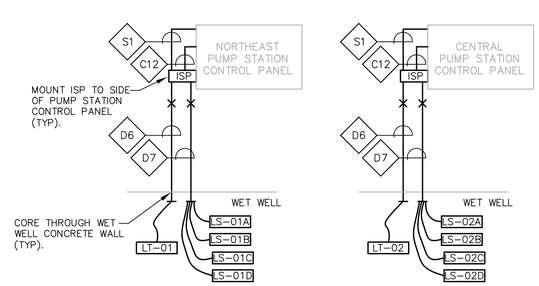

CONTROL BLOCK WIRING DIAGRAM NORTHEAST AND CENTRAL PUMP STATIONS

NOT TO SCALE

NOTES:

1. EXISTING FLOAT SWITCHES IN THE WET WELLS ARE TO BE REMOVED AND REPLACED. EXISTING CONDUIT ASSOCIATED WITH THE REMOVED FLOAT SWITCHES IS TO BE CAPPED AT BOTH ENDS AND LEFT ABANDONED.

PREPARED BY

BETA
www.BETA-Inc.com

REGISTERED PROFESSIONAL

COMMONWEALTH OF MASSACHUSETTS
MICHAEL J. COTTER
ELECTRICAL
No. 40999
REGISTERED PROFESSIONAL ENGINEER

SUBCONSULTANT

SAR ENGINEERING, INC.
Mechanical/Electrical Engineers
150 Grossman Drive, Suite 309
Braintree, Massachusetts 02184
617 221-9220
web: www.sar.com

PROJECT

Plymouth Airport Wastewater Treatment Facility Improvements

Plymouth, MA

TITLE

Electrical Wiring Diagrams

NO.	REVISIONS	DATE

DRAWN BY:	RLB
DESIGNED BY:	RLB
CHECKED BY:	MC
ISSUE DATE:	9/30/2022
BETA JOB NO.:	10042

SCALE

NONE

UNLESS OTHERWISE NOTED OR CHANGED BY REPRODUCTION

SHEET NO.

E-7

9/30/2022 7:30 AM W:\YEAR - 2021\21001 00 - PLYMOUTH AIRPORT WWTF UPGRADES\ELECTRICAL DEPARTMENT\21001 00 ELECTRICAL PLANS.DWG (BETA STB BW.STB)

LIGHTING FIXTURE SCHEDULE

TYPE	DESCRIPTION	MANUFACTURER & CATALOG SERIES	LAMPS TYPE	LAMPS LUMENS	VOLTS	WATTS	MOUNTING TYPE	MOUNTING HEIGHT	REMARKS
F1	96" LED ENCLOSED AND GASKETED INDUSTRIAL LIGHTING FIXTURE.	LITHONIA FEM-L96-9000LM-IMAFL-MVOLT-35K-80CRI	LED 3500K	8124lm	120	54	PENDENT		
F2	48" LED ENCLOSED AND GASKETED INDUSTRIAL LIGHTING FIXTURE.	LITHONIA FEM-L48-4000LM-IMAFL-MVOLT-35K-80CRI	LED 3500K	3615lm	120	24	PENDENT		–
W1	EXTERIOR BUILDING MOUNTED LED WALL PACK LIGHT FIXTURE	LITHONIA TWP-LED-20C-700-50K-T3M-MVOLT-PE-DDXB	LED 5000K	4233lm	120	45	WALL	12' AFG	INTEGRAL PHOTOCELL CONTROLLEED
W2	EXTERIOR BUILDING MOUNTED LED MINI WALL PACK LIGHT FIXTURE	LITHONIA TWS-LED-P1-50K-PE	LED 5000K	1476lm	120	25	WALL	8' AFG	INTEGRAL PHOTOCELL CONTROLLEED
	SELF CONTAINED EMERGENCY LIGHTING BATTERY UNIT NEMA 4 WITH TWO LIGHTING HEADS	REFER TO SPECIFICATIONS			120	8W	WALL		INSTALL 3/4"C, 2#12, 1#12GND TO REMOTE HEADS
	SEALED-BEAM WEATHERPROOF REMOTE LIGHTING FIXTURE WITH TWO LIGHTING HEADS	REFER TO SPECIFICATIONS			120	8W	WALL		
	EMERGENCY EXIT SIGN LED TYPE WITH BATTERY BACK-UP NEMA 4X	REFER TO SPECIFICATIONS			120		WALL		

LIGHTING FIXTURE SCHEDULES NOTES:

1. THE CATALOG NUMBERS LISTED ARE GIVEN AS A GUIDE TO THE DESIGN AND QUALITY OF FIXTURE DESIRED. EQUIVALENT DESIGNS, MATERIALS, DIMENSIONS, COEFFICIENT OF UTILIZATIONS AND EQUAL QUALITY FIXTURES OF OTHER MANUFACTURERS WILL BE ACCEPTABLE.

POWER CABLE/CONDUIT SCHEDULE

SYMBOL	CONDUIT SIZE*	CONDUCTORS*	GND*
P22	3/4"	(2)#12	(1)#12
P23	3/4"	(3)#12	(1)#12
P26	3/4"	(6)#12	(1)#12
P32	3/4"	(2)#10	(1)#10
P33	3/4"	(3)#10	(1)#10
P53	3/4"	(3)#8	(1)#10
P54	3/4"	(4)#8	(1)#10
P63	1"	(3)#6	(1)#8
P64	1"	(4)#6	(1)#8
P83	1 1/4"	(3)#4	(1)#8
P84	1 1/4"	(4)#4	(1)#8
P103	1 1/2"	(3)#3	(1)#6
P104	1 1/2"	(4)#3	(1)#6
P113	1 1/2"	(3)#2	(1)#6
P114	1 1/2"	(4)#2	(1)#6
P133	2"	(3)#1	(1)#6
P134	2"	(4)#1	(1)#6
P153	2"	(3)#1/0	(1)#6
P154	2"	(4)#1/0	(1)#6
P173	2 1/2"	(3)#2/0	(1)#6
P174	2 1/2"	(4)#2/0	(1)#6
P203	2 1/2"	(3)#3/0	(1)#4
P204	2 1/2"	(4)#3/0	(1)#4
PM1	1 1/2" SLEEVE THROUGH FLOOR GRATE	MANUFACTURE PROVIDED CABLES	
PM2	3" SLEEVE THROUGH FLOOR GRATE	MANUFACTURE PROVIDED CABLES	

SIGNAL CABLE/CONDUIT SCHEDULE

SYMBOL	CONDUIT SIZE	CONDUCTORS
S	1"	VENDER PROVIDED
S1	3/4"	1-2/C#16 TSP
S13	3/4"	1-3/C#16 TSP
S2	3/4"	2-2/C#16 TSP
S23	3/4"	2-3/C#16 TSP
S3	1"	3-2/C#16 TSP
S33	1"	3-3/C#16 TSP
S4	1"	4-2/C#16 TSP
S5	1"	5-2/C#16 TSP
S6	1 1/2"	6-2/C#16 TSP
S7	1 1/2"	7-2/C#16 TSP
S8	1 1/2"	8-2/C#16 TSP
S9	1 1/2"	9-2/C#16 TSP
S10	2"	10-2/C#16 TSP
TC1	3/4"	8/C#18
SC1	3/4"	1-4/C#16 TSP

TELE/DATA CABLE/CONDUIT SCHEDULE

SYMBOL	CONDUIT SIZE	CONDUCTORS
TD1	1"	1-CAT6 CABLE
TD2	1"	2-CAT6 CABLE

CONTROL CABLE/CONDUIT SCHEDULE

SYMBOL	CONDUIT SIZE	CONDUCTORS
C2	3/4"	2#14
C4	3/4"	4#14
C5	3/4"	5#14
C6	3/4"	6#14
C7	3/4"	7#14
C8	3/4"	8#14
C9	3/4"	9#14
C10	3/4"	10#14
C12	3/4"	12#14
C14	1"	14#14
C20	1"	20#14
C30	1"	30#14

NOTE: CONDUIT AND CONDUCTOR SIZES ARE TO BE PER THE ABOVE SCHEDULES UNLESS OTHERWISE NOTED.

PANELBOARD SCHEDULE

NO. LP1 LOCATION: ELECTRIC ROOM

120/208 V, 3 PH, 4 W, 100 A MAINS — 100 A SOLID NEUTRAL — 100 A MCB

10,000 AIC AT 120 V — 100 A GROUND BUS — – A MLO — SURFACE MOUNTING

CIRCUIT	DESCRIPTION OF LOAD	LOAD (KVA) Aø	Bø	Cø	BREAKER TRIP	POLE	BREAKER POLE	TRIP	LOAD (KVA) Aø	Bø	Cø	DESCRIPTION OF LOAD	CIRCUIT
1	BASIN AREA RECEPTACLES	0.80			20	1	1	20	1.2			OVERHEAD GARAGE DOOR	2
3	MAINTENANCE AREA RECEPTACLES		1.0		20	1	1	20		0.21		LIGHTING	4
5	BLOWER ROOM RECEPTACLES			0.60	20	1	1	20			0.48	LIGHTING	6
7	OFFICE RECEPTACLES	0.80			20	1	1	20	0.30			EXTERIOR LIGHTING	8
9	OFFICE RECEPTACLES		0.60		20	1	1	20		0.6		FLOW METERS	10
11	OFFICE RECEPTACLES			0.80	20	1	1	20			0.6	FLOW CHART RECORDERS	12
* 13	EXTERIOR RECEPTACLES	1.20			20	1	1	20	0.8			DO METERS AND DO CHART RECORDERS	14
15	EXHAUST FAN EF-1		0.15		20	1	1	20		0.20		DOMESTIC HOT WATER RECIRC PUMP	16
17	SACP PANEL			0.5	20	1	1	20			0.20	DOMESTIC HOT WATER HEATER	18
19	SPARE	–			20	1	1	20	–			SPARE	20
21	SPARE		–		20	1	1	20		–		SPARE	22
23	SPARE			–	20	1	1	20			–	SPARE	24
25	SPARE	–			20	1	1	20	–			SPARE	26
27	SPARE		–		20	1	1	20		–		SPARE	28
29	SPARE			–	20	1	1	20			–	SPARE	30
31	SPARE	–			20	1	1	20	–			SPARE	32
33	SPARE		–		20	1	1	20		–		SPARE	34
35	SPARE			–	20	1	2	50			2.0	CHEMICAL SHED LOAD CENTER	36
37	SPARE	–			20	1			2.0				38
39	GENERATOR JACKET HEATER		1.50		20	1	2	30		1.87		HP-1 & ACCU-1	40
41	GENERATOR BATTERY CHARGER AND STATOR HEATER			0.60	20	1					1.87		42
SUB-TOTAL CONNECTED		2.80	3.25	2.50					4.30	2.88	5.15	SUB-TOTAL CONNECTED	

* PROVIDE GFCI BREAKER

SUB-TOTAL CONNECTED	KVA Aø =	7.10
SUB-TOTAL CONNECTED	KVA Bø =	6.13
SUB-TOTAL CONNECTED	KVA Cø =	7.65
TOTAL CONNECTED	KVA =	20.88

PREPARED BY

BETA
www.BETA-Inc.com

REGISTERED PROFESSIONAL

COMMONWEALTH OF MASSACHUSETTS
MICHAEL J. COTTER
ELECTRICAL
No. 40999
REGISTERED PROFESSIONAL ENGINEER

SUBCONSULTANT

SAR ENGINEERING, INC.
Mechanical/Electrical Engineers
150 Grossman Drive, Suite 309
Braintree, Massachusetts 02184
617 221-9220
web: www.sar.com

PROJECT

Plymouth Airport Wastewater Treatment Facility Improvements

Plymouth, MA

TITLE

Electrical Schedules

NO.	REVISIONS	DATE

DRAWN BY:	RLB
DESIGNED BY:	RLB
CHECKED BY:	MC
ISSUE DATE:	9/30/2022
BETA JOB NO.:	10042

SCALE

NONE

UNLESS OTHERWISE NOTED OR CHANGED BY REPRODUCTION

SHEET NO.

E-8

9/30/2022 7:30 AM W:\YEAR - 2021\21001.00 - PLYMOUTH AIRPORT WWTF UPGRADES\ELECTRICAL DEPARTMENT\21001.00 ELECTRICAL PLANS.DWG (BETA STB BW.STB)

DUCT / CABLE SCHEDULE

DUCT NO.	SIZE	CONDUCTORS	FROM	TO
D1	2 1/2"	(4)#3/0	UTILITY POLE	MCB
D2	2 1/2"	PULL STRING	STUB UP AND CAP AT UTILITY POLE BASE	STUB UP AND CAP BELOW UTILITY METER
D3	2 1/2"	(4)#3/0, #4 GND	GENERATOR	GENERATOR DISCONNECT SWITCH
D4	1"	(4) #12, #12GND	LP-1	GENERATOR AUXILLARY SYSTEMS
D5	1"	(6) #14	GENERATOR	ATS, EMERGENCY STOP
D6	1"	MANUFACTURE SUPPLIED LEVEL TRANSMITTER CORD	PUMP STATION CONTROL PANEL	WET WELL LEVEL TRANSMITTER
D7	1 1/2"	MANUFACTURE SUPPLIED FLOAT SWITCH CORDS	PUMP STATION CONTROL PANEL	WET WELL FLOAT SWITCHES

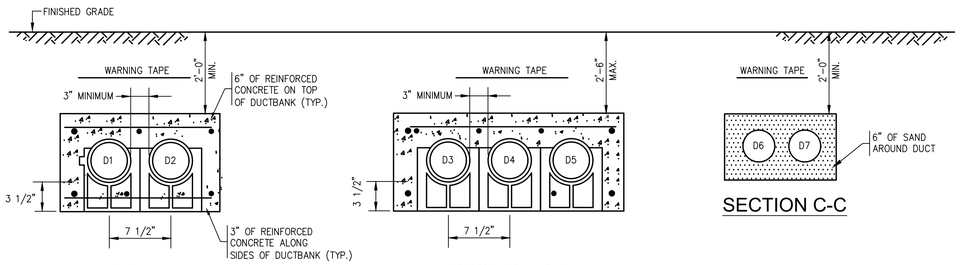

SECTION A-A

SECTION B-B

SECTION C-C

NOTES:

1. BACKFILL DUCT BANK IN LAYERS AND MANUALLY TAMP OR "PUDDLE" CONCRETE FILL. PROVIDE RED DUCT BANK MARKER TAPES, READING "CAUTION – ELECTRICAL LINES BELOW", OVER ENTIRE LENGTH OF DUCTLINE. LOCATE TAPES 12 INCHES BELOW GRADE. PROVIDE A TAPE FOR EVERY 12 INCHES OF WIDTH OF DUCTLINE.

2. A MINIMUM OF 12" SEPARATION SHALL BE KEPT BETWEEN DUCT BANK SECTIONS WITHIN SAME TRENCH.

DUCTBANK SECTIONS

NO SCALE

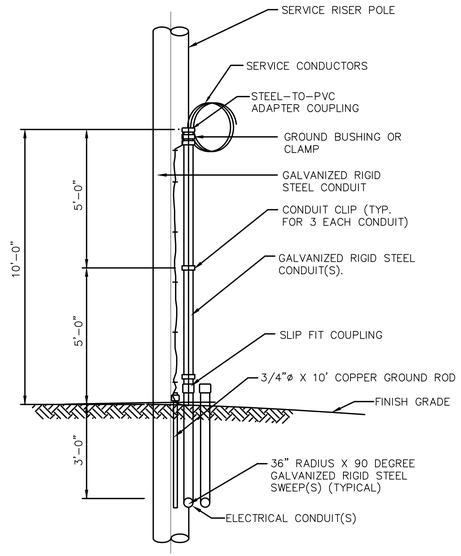

UTILITY POLE SERVICE RISER DETAIL

NOT TO SCALE

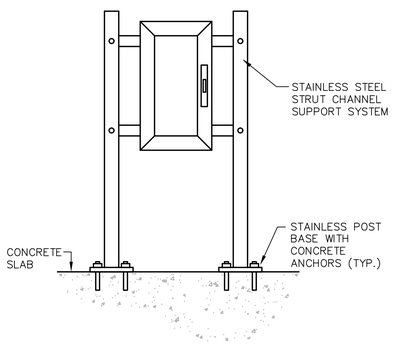

ELECTRICAL EQUIPMENT STANCHION MOUNTING DETAIL

NOT TO SCALE

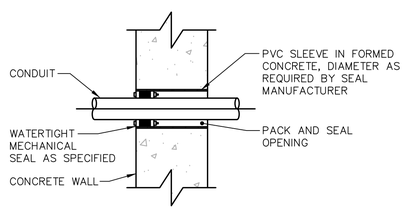

CONDUIT PENETRATION THROUGH CONCRETE WALL

NOT TO SCALE

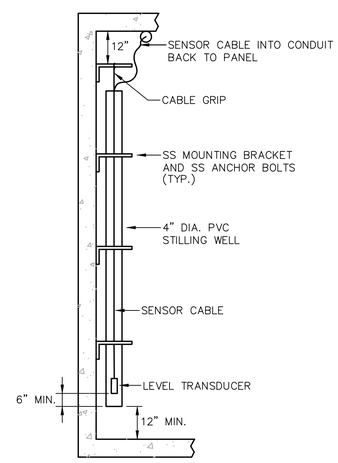

SUBMERSIBLE LEVEL TRANSDUCER IN WET WELL

NOT TO SCALE

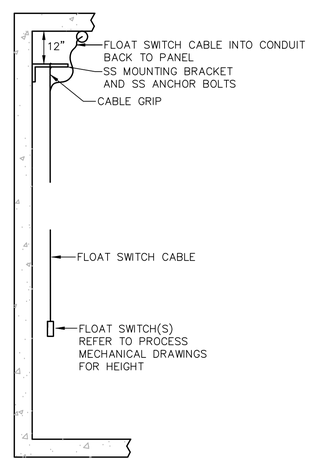

FLOAT LEVEL SWITCH IN WET WELL

NOT TO SCALE

PREPARED BY

BETA
www.BETA-Inc.com

REGISTERED PROFESSIONAL

COMMONWEALTH OF MASSACHUSETTS
MICHAEL J. COTTER
ELECTRICAL
No. 40999
REGISTERED PROFESSIONAL ENGINEER

SUBCONSULTANT

SAR ENGINEERING, INC.
Mechanical/Electrical Engineers
150 Grossman Drive, Suite 309
Braintree, Massachusetts 02184
617 221-9220
web: www.sar.com

PROJECT

Plymouth Airport Wastewater Treatment Facility Improvements

Plymouth, MA

TITLE

Electrical Details

NO.	REVISIONS	DATE

DRAWN BY:	RLB
DESIGNED BY:	RLB
CHECKED BY:	MC
ISSUE DATE:	9/30/2022
BETA JOB NO.:	10042

SCALE

NONE

UNLESS OTHERWISE NOTED OR CHANGED BY REPRODUCTION

SHEET NO.

E-9

9/30/2022 7:30 AM W:\YEAR - 2021\21001.00 - PLYMOUTH AIRPORT WWTF UPGRADES\ELECTRICAL DEPARTMENT\21001.00 ELECTRICAL PLANS.DWG (BETA STB BW.STB)