City of Taunton, Massachusetts
Main Lift Pump Station Improvements

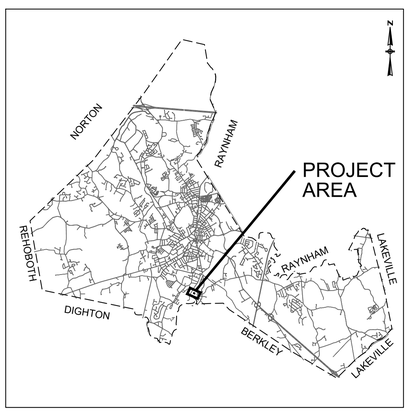

LOCATION MAP
NOT TO SCALE

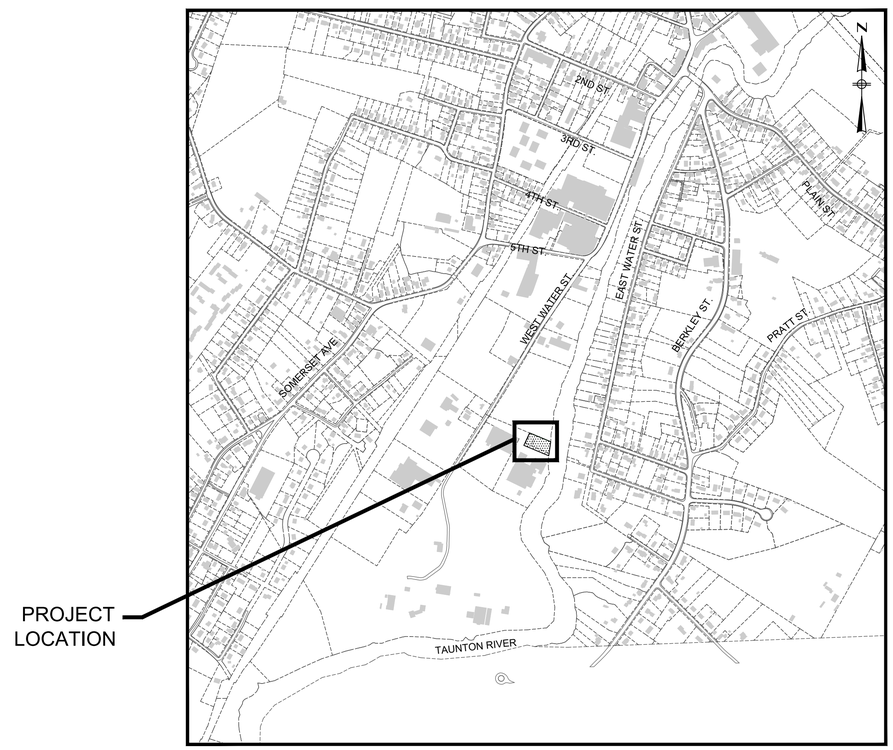

PROJECT LOCATION

LOCUS MAP
NOT TO SCALE

Mayor
Shaunna O'Connell

Department of Public Works
Frederic J. Cornaglia - Commissioner
Anthony Abreau - Assistant Commissioner

City Engineer
Mike Patneaude, P.E.

City Council
Phillip Duarte
Barry Sanders
Jeff Postell
John M. McCaul
David Pottier
Lawrence J Quintal
Chris Coute
Kelly A Dooner
Estele Borges

COMMONWEALTH OF MASSACHUSETTS
JOSEPH FEDERICO, JR.
No. 30863
REGISTERED PROFESSIONAL ENGINEER

Prepared By:

BETA
www.BETA-Inc.com

Contract S-2022-2
CWSRF No. 6832

Issue Date:
March 31, 2022

J:\Taunton\Main Lift Pump Station\AutoCAD\DrawingFiles\Contract 3 - Main Lift PS Buildout Contract\Title Sheet.dwg

PLOT DATE: Mar. 28, 2022 11:00am

INDEX OF DRAWINGS

GENERAL

G-1	DRAWING INDEX & LEGEND
G-2	GENERAL NOTES
G-3	PROCESS FLOW DIAGRAM

CIVIL

C-1	EXISTING CONDITIONS SITE PLAN
C-2	PROPOSED SITE PLAN
CD-1	CIVIL DETAILS I
CD-2	CIVIL DETAILS II

EASEMENT

EP-1	EASEMENT PLAN 106-4
EP-2	EASEMENT PLAN 106-5

ARCHITECTURAL

A-1	GENERAL NOTES
A-2	ABBREVIATIONS, SYMBOLS AND MOUNTING HEIGHTS
A-3	3D VIEWS
A-4	EXISTING SEWAGE PUMP STATION DRAWINGS
A-5	PUMP ROOM LEVEL PLAN
A-6	PUMP ROOM LEVEL RCP
A-7	PUMP ROOM MEZZANINE LEVEL PLAN
A-8	PUMP ROOM MEZZANINE LEVEL REFLECTED CEILING PLAN
A-9	GROUND FLOOR PLAN
A-10	GROUND FLOOR REFLECTED CEILING PLAN
A-11	ROOF PLAN
A-12	NORTH EXTERIOR ELEVATIONS
A-13	WEST EXTERIOR ELEVATIONS
A-14	SOUTH EXTERIOR ELEVATIONS
A-15	EAST EXTERIOR ELEVATIONS
A-16	BUILDING SECTIONS
A-17	BUILDING SECTIONS
A-18	BUILDING SECTIONS
A-19	WALL SECTIONS
A-20	MASONRY DETAILS
A-21	ROOF DETAILS
A-22	INTERIOR ELEVATIONS AND WC PLAN
A-23	EXTERIOR STAIR SECTIONS AND TYPICAL RAILING DETAILS
A-24	DOOR AND WINDOW SCHEDULES
A-25	SIGNAGE, ACCESSORIES AND FINISH SCHEDULES
A-26	DOOR AND WINDOW DETAILS
A-27	DOOR DETAILS
A-28	RESTROOM DETAILS AND PARTITION TYPES

STRUCTURAL

S-1	STRUCTURAL NOTES (1 OF 2)
S-2	STRUCTURAL NOTES (2 OF 2)
S-3	EXISTING PUMP ROOM PLAN
S-4	EXISTING GROUND FLOOR PLAN
S-5	BUILDING SECTIONS (1 OF 2)
S-6	BUILDING SECTIONS (2 OF 2)
S-7	CONTROL BUILDING EXISTING BASE PLAN
S-8	CONTROL BUILDING PLAN
S-9	CONTROL BUILDING ROOF FRAMING PLAN
S-10	CONTROL BUILDING SECTIONS
	GENERATOR PAD
	CONCRETE DETAILS
	MASONRY DETAILS
	MISCELLANEOUS STRUCTURAL DETAILS

MECHANICAL

M-1	BASEMENT LEVEL PLAN
M-2	MEZZANINE LEVEL PLAN
M-3	GROUND LEVEL PLAN
M-4	SECTION A-A
M-5	SECTION B-B
M-6	SECTION C-C
MD-1	MECHANICAL DETAILS I
MD-2	MECHANICAL DETAILS II

HVAC

H-1	HVAC LEGEND & GENERAL NOTES
H-2	HVAC BASEMENT LEVEL PLAN
H-3	HVAC MEZZANINE LEVEL PLAN
H-4	HVAC GROUND LEVEL PLAN
H-5	ROOF LEVEL PLAN
H-6	HVAC BUILDING SECTION
H-7	HVAC SCHEDULE, DETAILS, AND SECTION

PLUMBING

P-1	PLUMBING LEGEND, NOTES, AND SCHEDULE
P-2	PLUMBING BASEMENT LEVEL PLAN
P-3	PLUMBING MEZZANINE LEVEL PLAN
P-4	PLUMBING GROUND LEVEL PLAN
P-5	PLUMBING ROOF PLAN
P-6	PLUMBING DETAILS

INSTRUMENTATION AND CONTROL

I-1	LEGEND AND NOTES
I-2	WET WELLS AND PUMPS
I-3	WET WELLS AND PUMPS
I-4	STATION MONITORING

ELECTRICAL

E-1	ELECTRICAL LEGEND AND NOTES
E-2	ELECTRICAL ONE LINE DIAGRAM
E-3	ELECTRICAL SITE PLAN
E-4	BASEMENT LEVEL POWER AND LOW VOLTAGE PLAN
E-5	MEZZANINE LEVEL POWER AND LOW VOLTAGE PLAN
E-6	GROUND LEVEL POWER AND LOW VOLTAGE PLAN
E-7	ROOF POWER PLAN
E-8	BASEMENT LEVEL LIGHTING PLAN
E-9	MEZZANINE LEVEL LIGHTING PLAN
E-10	GROUND LEVEL LEVEL LIGHTING PLAN
E-11	ELECTRICAL SCHEDULES
E-12	ELECTRICAL WIRING DIAGRAMS
E-13	ELECTRICAL SITE DETAILS
E-14	ELECTRICAL DETAILS

LEGEND - EXISTING

CONTOUR – MAJOR
CONTOUR – MINOR
PARCEL LINE
PAVED DRIVE
FENCE
SHEETING
COAST LINE
DRAIN LINE
ELECTRIC LINE
GAS LINE
SEWER LINE
FORCE MAIN — FM
WATER LINE
DRAIN MANHOLE — DMH
CATCH BASIN — CB
SEWER MANHOLE — SMH
WATER GATE — WG
HYDRANT — HYD
UTILITY POLE — UP#1
UTILITY LIGHT POLE — UP#1
LIGHT POLE
SIGN
MAG NAIL — MAG
MONITORING WELL — MW
TREELINE/TREE
BUILDINGS
PAVEMENT
WETLAND DELINEATION W/ FLAGS — WF#A1 — WF#A2
100-FT. WETLAND BUFFER
25-FT RIVER FRONT AREA
100-FT COASTAL BANK BUFFER
BORDERING LAND SUBJECT TO FLOODING ELEV. = 13.00 (NAVD88)

LEGEND - PROPOSED

EROSION CONTROL
WATER LINE — W
WATER VALVE — WG, CS, TS&V
HYDRANT — HYD
CHAIN LINK FENCE
LIMITS OF TEMPORARY EASEMENTS
LIMITS OF PERMANENT EASEMENTS

ABBREVIATIONS

BITUMINOUS	BIT.
CONCRETE	CONC.
CONCRETE RETAINING WALL	CRW
CONCRETE PAD	CPD
DESTINATION UNKNOWN	D.U.??
EDGE OF PAVEMENT	EOP
GRASS	GRS
MONITORING WELL	MW
NO PIPE VISIBLE	NPV
OVERHEAD WIRES	OHW
STONE RETAINING WALL	SRW
VENT PIPE	VP
VERTICAL GRANITE CURB	VGC

PREPARED BY

BETA
www.BETA-Inc.com

REGISTERED PROFESSIONAL

COMMONWEALTH OF MASSACHUSETTS
JOSEPH FEDERICO, JR.
No. 30863
REGISTERED PROFESSIONAL ENGINEER

SUBCONSULTANT

PROJECT

MAIN LIFT PUMP STATION IMPROVEMENTS

TAUNTON, MA

TITLE

DRAWING INDEX & LEGEND

NO.	REVISIONS	DATE

DRAWN BY:	BM
DESIGNED BY:	AJG
CHECKED BY:	CC
ISSUE DATE:	3/31/2022
BETA JOB NO.:	5530

SCALE

NONE

UNLESS OTHERWISE NOTED OR CHANGED BY REPRODUCTION

SHEET NO.

G-1

3/28/2022 11:00 AM J:\TAUNTON\MAIN LIFT PUMP STATION\AUTOCAD\DRAWINGFILES\CONTRACT 3 - MAIN LIFT PS BUILDOUT CONTRACT\DRAWING INDEX & LEGEND.DWG

GENERAL CIVIL NOTES

1. SURVEY INFORMATION:

   –TOPOGRAPHIC SURVEY COMPLETED BY LIGHTHOUSE LAND SURVEYING LLC BETWEEN JANUARY 13, 2017 THRU JANUARY 20, 2017. PROPERTY LINES AND ABUTTING OWNER INFORMATION OBTAINED FROM THE "OFFICE OF GEOGRAPHIC INFORMATION (MASSGIS), COMMONWEALTH OF MASSACHUSETTS, MASSIT". IT IS NOT INTENDED TO REFLECT THAT A TITLE SEARCH WAS PERFORMED.

   –VERTICAL DATUM: NAVD 88.

   –HORIZONTAL DATUM: MASSACHUSETTS STATE PLANE – MAINLAND ZONE NAD83

2. THE LOCATION, SIZE, AND MATERIAL OF EXISTING PIPES, DUCTS, CONDUITS AND OTHER UNDERGROUND STRUCTURES AND/OR UTILITIES SHOWN ON THESE PLANS ARE FROM THE BEST SOURCES AVAILABLE AT PRESENT AND ARE NOT WARRANTED TO BE EXACT, NOR IS IT WARRANTED THAT ALL UNDERGROUND PIPES, UTILITIES OR STRUCTURES ARE SHOWN. EXACT LOCATION TO BE DETERMINED BY CONTRACTOR IN FIELD.

3. EXISTING UTILITIES DEPICTED ARE APPROXIMATE ONLY. PRIOR TO CONSTRUCTION, THE CONTRACTOR SHALL VERIFY LOCATIONS OF ALL EXISTING UTILITIES AND NOTIFY ALL UTILITY COMPANIES (PUBLIC AND PRIVATE). IN ADDITION, "DIG SAFE" MUST BE CONTACTED AT 1(800)–322–4844.

4. EXISTING UTILITIES ENCOUNTERED DURING CONSTRUCTION SHALL BE PROTECTED AND SUPPORTED AT ALL TIMES BY THE CONTRACTOR. THE CONTRACTOR SHALL CONDUCT HIS OPERATIONS TO INTERFERE AS LITTLE AS POSSIBLE WITH EXISTING UTILITIES. PAYMENT FOR PROVIDING SAID PROTECTION AND SUPPORTS SHALL BE CONSIDERED A PART OF AND PAID FOR UNDER THE APPROPRIATE ITEMS UNLESS OTHERWISE INDICATED AND/OR DIRECTED BY THE OWNER. THE CONTRACTOR SHALL HAVE NO CLAIM FOR ADDITIONAL COMPENSATION BY REASON OF DELAY AND/OR INCONVENIENCE IN ADAPTING HIS OPERATIONS ACCORDINGLY.

5. ALL DIMENSIONS AND JOB RELATED CONDITIONS ARE TO BE VERIFIED BY THE CONTRACTOR. ANY DISCREPANCIES FOUND ARE TO BE BROUGHT TO THE ATTENTION OF THE OWNER/ENGINEER AND PROPERLY RESOLVED BEFORE PROCEEDING WITH THAT PORTION OF THE WORK. CONTINUATION WITH OTHER ASPECTS OF THE WORK SHALL PROCEED WITHOUT DELAY OR CAUSE FOR CLAIM.

6. ALL GRASSED AREAS DISTURBED BY THE CONSTRUCTION OPERATIONS SHALL BE LOAMED AND SEEDED IN ACCORDANCE WITH THE SPECIFICATIONS. FINAL RESTORATION SHALL BE EQUAL TO OR BETTER THAN THAT WHICH EXISTED PRIOR TO CONSTRUCTION AS DETERMINED SOLELY BY THE OWNER/ENGINEER.

7. WORK PERFORMED BY THE CONTRACTOR SHALL NOT INTERFERE WITH WASTEWATER FLOWS THROUGH THE PUMPING STATION. THE CONTRACTOR SHALL PROVIDE ALL TEMPORARY EQUIPMENT, PIPING, FITTINGS AND APPURTENANCES NECESSARY TO COMPLETE THIS CONTRACT. THE CONTRACTOR SHALL INSTALL AND MAINTAIN ALL TEMPORARY UNIT BYPASS–LINES UNTIL THE MODIFICATIONS AND CONSTRUCTION ARE COMPLETE.

8. THE CONTRACTOR SHALL CONFINE ALL ACTIVITIES FOR CONSTRUCTION PURPOSES WITHIN THE INDICATED LIMITS OF WORK AS SHOWN IN THE CONTRACT DRAWINGS. ALL SURFACES DAMAGED OUTSIDE THE INDICATED LIMITS SHALL BE REPLACED IN KIND AT CONTRACTOR'S EXPENSE.

9. CONTRACTOR IS RESPONSIBLE FOR THE LEGAL AND PROPER DISPOSAL OF ALL DEMOLITION MATERIAL ACCORDING TO THE LAWS OF THE MUNICIPALITY IN WHICH THE WORK IS BEING DONE AND THE COMMONWEALTH OF MASSACHUSETTS. ALL DEMOLITION MATERIAL INCLUDING PUMPS, PIPE, AND BRICK THAT WAS IN CONTACT WITH SEWAGE SHALL BE CLEANED IN ACCORDANCE WITH MADEP REQUIREMENTS AND DISPOSED OF ACCORDINGLY. ONCE CLEANED, DEMOLITION MATERIALS SHALL NOT BE CONSIDERED SPECIAL WASTE.

10. GENERAL CONTRACTOR SHALL COORDINATE WITH THEIR ELECTRICAL SUBCONTRACTOR AND DEFINE THE SCOPE OF WORK IDENTIFIED IN DIVISION 16, TO BE COMPLETED BY THE GC.

SEQUENCE OF CONSTRUCTION

GENERAL NOTES

1. THE CONTRACTOR SHALL BE AWARE THAT THE CITY OF TAUNTON HAS OTHER CONSTRUCTION PROJECTS ONGOING AT THE CITY OF TAUNTON WASTEWATER TREATMENT FACILITY. THE CONTRACTOR WITHOUT CLAIM SHALL BE REQUIRED TO COORDINATE HIS WORK WITH OTHER CONTRACTORS TO ENSURE NO CONFLICTS OCCUR.

2. THE CONTRACTOR'S SEQUENCE OF CONSTRUCTION SHALL BE BASED UPON THE SCHEDULE SUBMITTED BY THE CONTRACTOR AND APPROVED BY THE ENGINEER AS SPECIFIED. HOWEVER, AS A GUIDE FOR THE BIDDERS IN THE PREPARATION OF THEIR BID AND FOR THE CONTRACTOR IN THE PREPARATION OF HIS SCHEDULE, A RECOMMENDED SEQUENCE OF CONSTRUCTION IS PROVIDED ON THIS PLAN.

3. THE ORDER OF CONSTRUCTION SHALL BE SUBJECT TO THE APPROVAL OF THE ENGINEER; SUCH APPROVAL OR DIRECTION, HOWEVER, SHALL IN NO WAY RELIEVE THE CONTRACTOR'S RESPONSIBILITY TO PERFORM THE WORK IN STRICT ACCORDANCE WITH THE CONTRACT DOCUMENTS. THE CONSTRUCTION PLANS AND SPECIFICATIONS HAVE BEEN DEVELOPED TO MINIMIZE THE CONSTRUCTION IMPACTS ON THE OPERATION OF THE CITY'S WASTEWATER COLLECTION SYSTEM. THE CONTRACTOR'S WORK SEQUENCE MUST BE SPECIFICALLY DETAILED IN THE CPM WHICH IS REQUIRED UNDER SECTION 01310.

4. WHENEVER THE CONTRACTOR'S PROPOSED WORK WILL REQUIRE THE OWNER TO DEVIATE FROM THE NORMAL OPERATION OF THE WASTEWATER COLLECTION/PUMPING SYSTEM, THE CONTRACTOR SHALL SO NOTIFY THE ENGINEER IN WRITING. SUCH NOTIFICATION SHALL BE SUBMITTED ONE (1) WEEK PRIOR TO THE PLANNED CONSTRUCTION ACTIVITY.

MAIN LIFT PUMPING STATION:

EXISTING PUMPING STATION WILL REMAIN ON–LINE THROUGHOUT CONSTRUCTION AND START–UP OF NEW STATION.

1. CONSTRUCT YARD PIPING

2. CONSTRUCT PUMPING STATION
   - MECHANICAL PIPING AND EQUIPMENT
   - ARCHITECTURAL
   - ELECTRICAL WORK
   - HEATING & VENTILATION
   - INSTRUMENTATION & CONTROLS
   - ENABLE BOTH STATIONS TO OPERATE TOGETHER FOR START–UP PURPOSES

6. START–UP & TEST NEW STATION
   - INTRODUCE FLOW TO NEW STATION (VIA WEST WATER STREET)
   - OLD STATION WILL CONTINUE TO OPERATE

7. PUMP START–UP
   - PROVIDE NOTIFICATION TO OWNER AND VEOLIA
   - OPERATE FORCE MAIN GATE VALVES AT WASTEWATER TREATMENT PLANT TO ALLOW INTRODUCTION OF FLOW FROM NEW FORCE MAINS.
   - FILL ONE OF TWO NEW FORCE MAINS WITH SEWAGE
   - OPERATE GATES IN UPSTREAM MANHOLE ON WEST WATER STREET TO INTRODUCE FLOW TO THE NEW WET WELL.
   - INFLUENT FLOW TO NEW STATION SHALL BE ISOLATED BY OPERATION OF STRUCTURE GATES DURING INTERRUPTIONS IN START UP AND REDIRECTED BACK TO THE EXISTING STATION.

8. DEMONSTRATION OF INSTRUMENTATION AND CONTROL STRATEGIES
   - THE STATION SHALL NOT BE LEFT UNATTENDED AND IN AUTOMATIC OPERATION UNTIL CONTROL STRATEGIES HAVE BEEN CHECKED OUT AND DEMONSTRATED.
   - EACH ALARM POINT AND MONITORING ELEMENT SHALL BE CHECKED OUT

9. DIRECT FLOW TO NEW STATION AND LEAVE ON AUTOMATIC
   - VACTOR SIPHON DISCHARGE MANHOLE
   - ISOLATE NEW STATION FROM INFLUENT FLOW BY OPERATING GATES IN SMH–A
   - REMOVE CAP FROM SIPHON DISCHARGE PIPING IN THE INFLUENT STRUCTURE.
   - DEFLATE AND REMOVE PLUG AND ALLOW FLOW TO ENTER FROM THE EAST SIDE OF THE STATION
   - OPEN GATES FROM WEST WATER STREET INFLUENT SEWER

5. CLEAN OLD STATION
   - DRAIN FORCE MAIN BACK INTO WET WELL AND DRAW–DOWN WET WELL WITH SUBMERSIBLE PUMPS AND PUMP TO NEW STATION
   - POWER WASH WET WELL WALLS AND FLOOR AND REMOVE AND DISPOSE OF RESIDUAL SLUDGE, SCUM, GREASE AND DEBRIS FROM WET WELL
   - CAP INFLUENT PIPE ON SOUTH SIDE OF WET WELL. FILL WITH CLEAN WATER TO ELEV. & FILL PUMP VOLUTES

WORK ON OR NEAR PRIVATE PROPERTY

1. WORK IN THE VICINITY OF PRIVATE PROPERTY SHALL BE PERFORMED WITHOUT ENCROACHMENT ONTO THE PRIVATE PROPERTY. SHOULD ENCROACHMENT ONTO PRIVATE PROPERTY BECOME NECESSARY FOR ANY REASON, CONTRACTOR SHALL BE SOLELY RESPONSIBLE FOR SECURING PERMISSION OR AUTHORITY FROM ANY AND ALL ENTITIES OWNING OR HAVING CONTROL OVER SAID PROPERTIES PRIOR TO THE PERFORMANCE OF WORK ON THE PROPERTY.

2. CONTRACTOR SHALL RESTORE ANY AND ALL DISTURBED AREAS ON PRIVATE PROPERTY TO AS GOOD OR BETTER CONDITION THAN ORIGINAL, TO THE SATISFACTION OF THE PROPERTY OWNER.

3. CONTRACTOR SHALL BE SOLELY RESPONSIBLE FOR REPAIRING ANY AND ALL DAMAGE TO EXISTING ITEMS/ FEATURES ON PRIVATE PROPERTY, OR FOR REPLACING DAMAGED ITEMS IF SAID ITEMS CANNOT BE REPAIRED, AT NO ADDITIONAL EXPENSE TO THE OWNER.

4. TEMPORARY CONSTRUCTION EASEMENTS HAVE BEEN PROVIDED BY THE OWNER FOR PROPOSED WORK INTENDED TO BE PERFORMED ON PRIVATE PROPERTY. CONTRACTOR SHALL MAINTAIN THEIR ACTIVITIES TO THE LIMITS OF THE TEMPORARY CONSTRUCTION EASEMENTS, AND SHALL BE SOLELY RESPONSIBLE FOR COORDINATION WITH THE PROPERTY OWNERS DURING CONSTRUCTION (E.G. ADVANCE NOTIFICATION, LIMITED ACCESS, TEMPORARY SHUTDOWNS, ETC.).

5. CONTRACTOR SHALL TAKE PRE AND POST–CONSTRUCTION PHOTOGRAPHS OF ALL PRIVATE PROPERTIES IMPACTED BY THE WORK (WHETHER PLANNED OR UNPLANNED), AND SHALL PROVIDE COPIES OF SAME TO THE OWNER UPON COMPLETION OF THE PROJECT.

RESTORATION OF PRIVATE PROPERTY

1. TEMPORARY EASEMENT (CONSTRUCTION EQUIPMENT STAGING AREA – BAY STATE CRUCIBLE PROPERTY) – GRADE EXISTING GRAVEL SMOOTH TO DRAIN

2. ALL AREAS DISTURBED BY THE CONTRACTOR SHALL BE RESTORED TO MATCH EXISTING CONDITION AS SHOWN IN THE PRE–CONSTRUCTION VIDEO. THIS WORK SHALL BE COMPLETED AT NO ADDITIONAL COST TO THE OWNER.

YARD PIPING NOTES

1. CONTRACTOR SHALL CONDUCT TEST PITS AS SHOWN AND AT ALL LOCATIONS WHERE NEW PIPING IS TO BE CONNECTED TO EXISTING PIPING AND STRUCTURES TO FIELD VERIFY THE EXACT SIZE, MATERIAL, LOCATION, INVERT ELEVATION AND ALIGNMENT (VERTICAL AND HORIZONTAL) OF EXISTING UNDERGROUND PIPES AND STRUCTURES.

2. THE CONTRACTOR SHALL CONDUCT TEST PITS, AS REQUIRED, IN ORDER TO ASCERTAIN THE EXACT LOCATION OF EXISTING UNDERGROUND UTILITIES.

3. WHERE PIPING IS TO BE CONNECTED TO EXISTING PIPING OR STRUCTURES, THE CONTRACTOR SHALL FURNISH AND INSTALL ALL ADAPTERS, FITTINGS AND ADDITIONAL PIPE (REQUIRED AS A RESULT OF CUTTING THE EXISTING PIPE BACK) TO COMPLETE THE CONNECTION AS REQUIRED.

4. PIPE REPAIR CLAMPS SHALL BE MADE OF STAINLESS STEEL AND PROVIDED WITH TYPE 304 STAINLESS STEEL BOLTS AND NUTS.

5. ALL PIPING SHALL BE PROVIDED WITH FLEXIBLE CONNECTIONS WHERE EXITING OR ENTERING STRUCTURES AND BUILDINGS. FLEXIBLE CONNECTIONS SHALL BE COORDINATED WITH PIPE MANUFACTURER AND APPROVED BY THE ENGINEER.

PREPARED BY

BETA

www.BETA-Inc.com

REGISTERED PROFESSIONAL

COMMONWEALTH OF MASSACHUSETTS
JOSEPH FEDERICO, JR.
No. 30863
REGISTERED PROFESSIONAL ENGINEER

SUBCONSULTANT

PROJECT

MAIN LIFT PUMP STATION IMPROVEMENTS

TAUNTON, MA

TITLE

GENERAL NOTES

NO.	REVISIONS	DATE

DRAWN BY:	BM
DESIGNED BY:	AJG
CHECKED BY:	CC
ISSUE DATE:	3/31/2022
BETA JOB NO.:	5530

SCALE

NONE

UNLESS OTHERWISE NOTED OR CHANGED BY REPRODUCTION

SHEET NO. G-2

3/28/2022 11:00 AM J:\TAUNTON\MAIN LIFT PUMP STATION\AUTOCAD\DRAWINGFILES\CONTRACT 3 - MAIN LIFT PS BUILDOUT CONTRACT\GENERAL NOTES.DWG

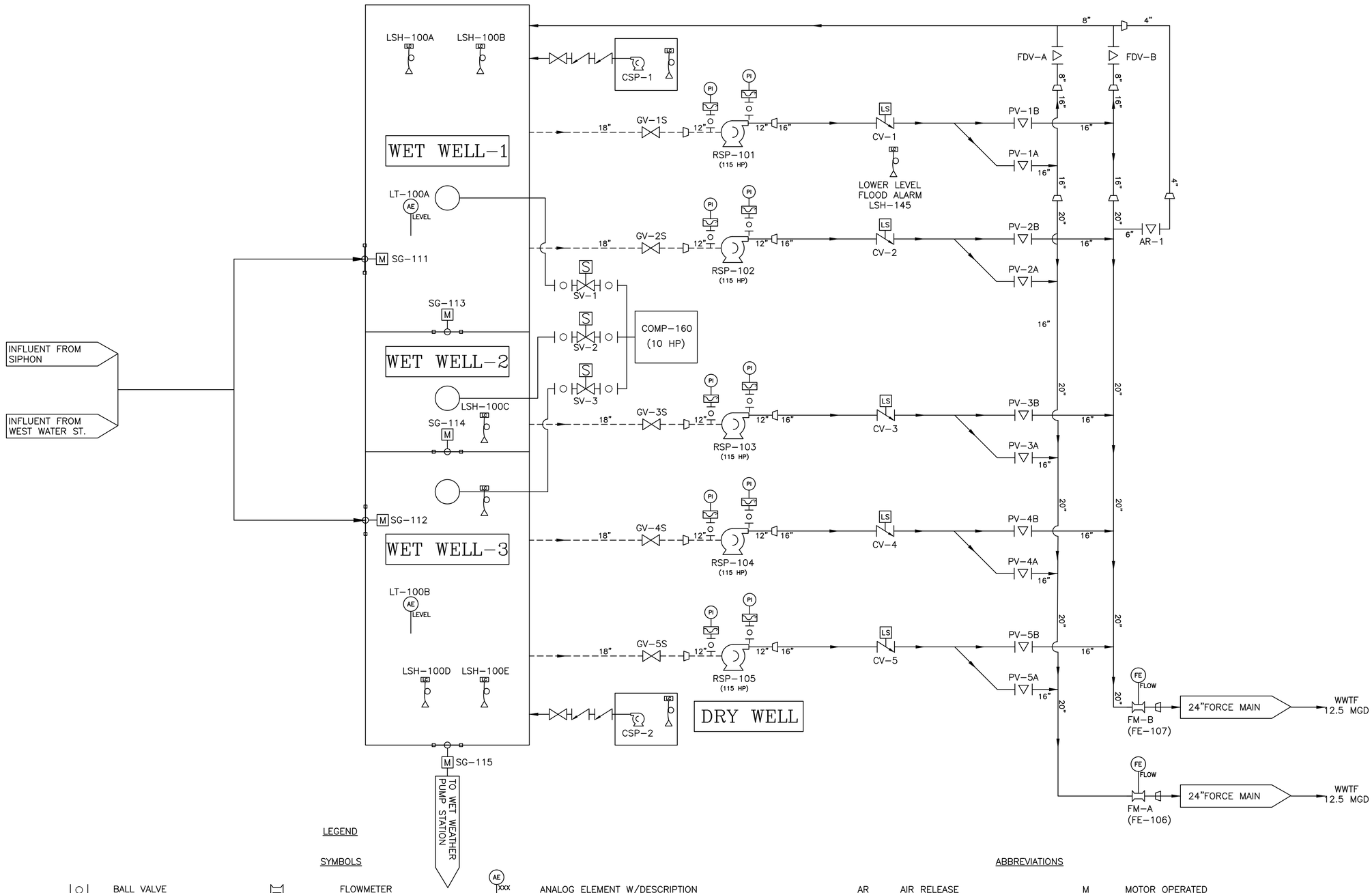

LEGEND

SYMBOLS

- BALL VALVE
- PLUG VALVE
- CHECK VALVE
- GATE VALVE
- SLUICE/SLIDE GATE
- MOTOR ACTUATOR
- LIMIT SWITCH
- FLOWMETER
- SUCTION PIPING
- DISCHARGE PIPING
- REDUCER
- CENTRIFUGAL PUMP
- SOLENOID VALVE
- ANALOG ELEMENT W/DESCRIPTION
- FLOAT TYPE LEVEL SENSOR
- PRESSURE INDICATOR W/DIAPHRAGM

ABBREVIATIONS

AR	AIR RELEASE	M	MOTOR OPERATED
COMP	COMPRESSOR	PCV	PUMP CONTROL VALVE
CSP	CENTRIFUGAL SUMP PUMP	PI	PRESSURE INDICATOR
CV	CHECK VALVE	PV	PLUG VALVE
DWF	DRY WELL FLOOD	SG	SLUICE GATE
FDV	FORCEMAIN DRAIN VALVE	SP	SEWAGE PUMP
FE	FLOW ELEMENT	SV	SOLENOID VALVE
FM	FLOWMETER	WWF	WET WELL FLOOD

PREPARED BY

BETA
www.BETA-Inc.com

REGISTERED PROFESSIONAL

COMMONWEALTH OF MASSACHUSETTS
JOSEPH FEDERICO, JR.
No. 30863
REGISTERED PROFESSIONAL ENGINEER

SUBCONSULTANT

PROJECT

MAIN LIFT PUMP STATION IMPROVEMENTS

TAUNTON, MA

TITLE

PROCESS FLOW DIAGRAM

NO.	REVISIONS	DATE

DRAWN BY:	BM
DESIGNED BY:	AJG
CHECKED BY:	CC
ISSUE DATE:	3/31/2022
BETA JOB NO.:	5530

SCALE

NONE

UNLESS OTHERWISE NOTED OR CHANGED BY REPRODUCTION

SHEET NO. G-3

3/28/2022 11:00 AM J:\TAUNTON\MAIN LIFT PUMP STATION\AUTOCAD\DRAWINGFILES\CONTRACT 3 - MAIN LIFT PS BUILDOUT CONTRACT\PROCESS FLOW DIAGRAM.DWG

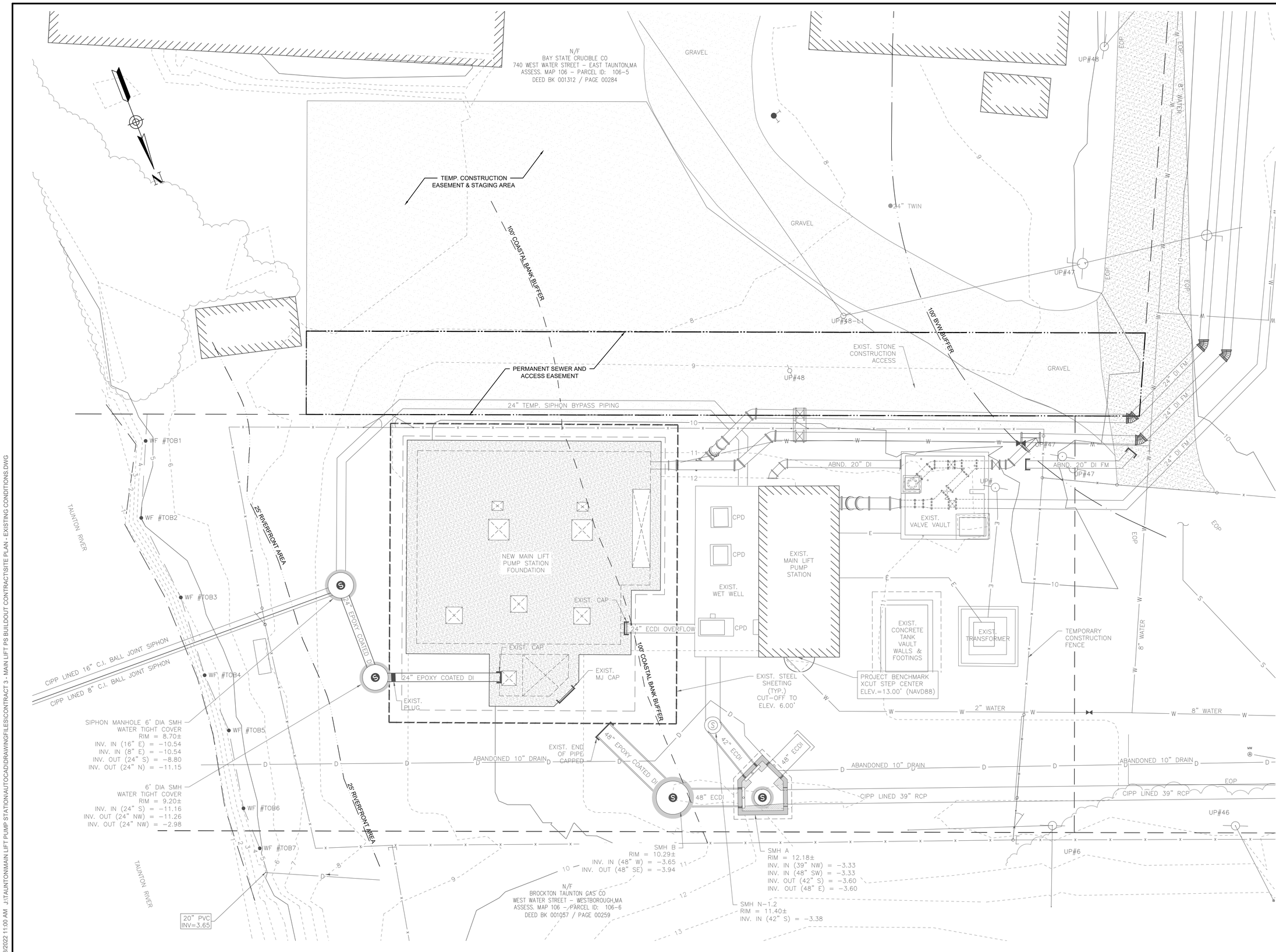

3/28/2022 11:00 AM J:\TAUNTON\MAIN LIFT PUMP STATION\AUTOCAD\DRAWINGFILES\CONTRACT 3 - MAIN LIFT PS BUILDOUT CONTRACT\SITE PLAN - EXISTING CONDITIONS.DWG

PREPARED BY

BETA

www.BETA-Inc.com

REGISTERED PROFESSIONAL

COMMONWEALTH OF MASSACHUSETTS
JOSEPH FEDERICO, JR.
No. 30863
REGISTERED PROFESSIONAL ENGINEER

SUBCONSULTANT

PROJECT

MAIN LIFT PUMP STATION IMPROVEMENTS

TAUNTON, MA

TITLE

EXISTING CONDITIONS SITE PLAN

NO.	REVISIONS	DATE

DRAWN BY:	BM
DESIGNED BY:	AJG
CHECKED BY:	CC
ISSUE DATE:	3/31/2022
BETA JOB NO.:	5530

SCALE

10 0 10 20

SCALE IN FEET: 1"=10'

UNLESS OTHERWISE NOTED OR CHANGED BY REPRODUCTION

SHEET NO.

C-1

NOTES:

1. REMOVAL OF EXISTING GATES TO BE COMPLETED AFTER THE NEW PUMP STATION HAS BEEN TESTED AND PLACED ONLINE
2. THE CONTRACTOR SHALL REMOVE/ABANDON ALL EXISTING DEWATERING WELLS AND SUMPS PRIOR TO PREPARING FOR FINAL PAVEMENT.
   2.1. EXISTING WELLS AND DEWATERING SUMPS SHALL BE CUT OFF FIVE FEET BELOW GRADE AND FILLED WITH GROUT TO THE TOP OF CASING. THE LUMP SUM COST SHALL SHALL INCLUDE COMPENSATION FOR EIGHT WELLS/SUMPS.
3. VACTOR SOLIDS FROM SIPHON DISCHARGE MANHOLE PRIOR TO INTRODUCING FLOW TO NEW STATION.
4. CLEAN OLD STATION
   - DRAIN FORCE MAIN BACK INTO WET WELL **THE CONTRACTOR SHALL PROVIDE AND INSTALL A SADDLE AND 2-INCH CORPORATION VALVE FOR A VENT AT THE WWTF PRIOR TO DRAINING**. COORDINATE LOCATION WITH THE ENGINEER.
   - DRAW-DOWN LIQUID FROM THE EXISTING WET WELL WITH SUBMERSIBLE PUMPS AND PUMP TO NEW STATION
   - SOLIDS CONSISTING OF FOG, TRASH AND RAGS SHALL BE REMOVED AND DISPOSED OF BY THE CONTRACTOR AS SPECIAL WASTE. THE CONTRACTOR SHALL ASSUME 10 TON OF DEBRIS DISPOSAL. **THIS MATERIAL SHALL NOT BE PUMPED TO THE NEW WET WELL.**
   - POWER WASH WET WELL WALLS AND FLOOR AND REMOVE AND DISPOSE OF RESIDUAL SLUDGE, SCUM, GREASE AND DEBRIS FROM WET WELL
   - CAP INFLUENT PIPE ON SOUTH SIDE OF WET WELL. FILL WITH CLEAN WATER TO ELEV. & FILL PUMP VOLUTES
5. SEE ELECTRICAL SHEETS FOR DUCT BANK REMOVAL AND REPLACEMENT REQUIREMENTS
   - THE EXISTING EMERGENCY GENERATOR CAN BE USED WHILE MAKING TIE OVER CONNECTIONS. FUEL USED DURING THE TIE OVER SHALL BE REPLACED AT THE CONTRACTOR'S EXPENSE.
   - THE CONTRACTOR SHALL PROVIDE A BACK-UP EMERGENCY GENERATOR CAPABLE OF MEETING THE EXISTING PUMP STATION POWER DEMANDS WHILE COMPLETING TIE OVER WORK.
6. PROPOSED PAVING SHALL INCLUDE FINE GRADING, ADJUSTMENT OF CASTINGS, REMOVE & DISPOSE OF EXISTING PAVEMENT AND BASE WHERE INDICATED, AND DENSE GRADE BASE WHERE INDICATED.
7. MASONRY PLUG SHALL CONSIST OF A DOUBLE LAYER OF HARD MASONRY BRICKS CEMENTED IN PLACE. PROVIDE EXPANDABLE WATER STOP AT INTERFACE OF PVC PIPE AND BRICK AROUND PERIMETER (HYDROTITE DSS OR APPROVED EQUAL) PARGE ENTIRE FACE OF PLUG WITH HYDRAULIC CEMENT.

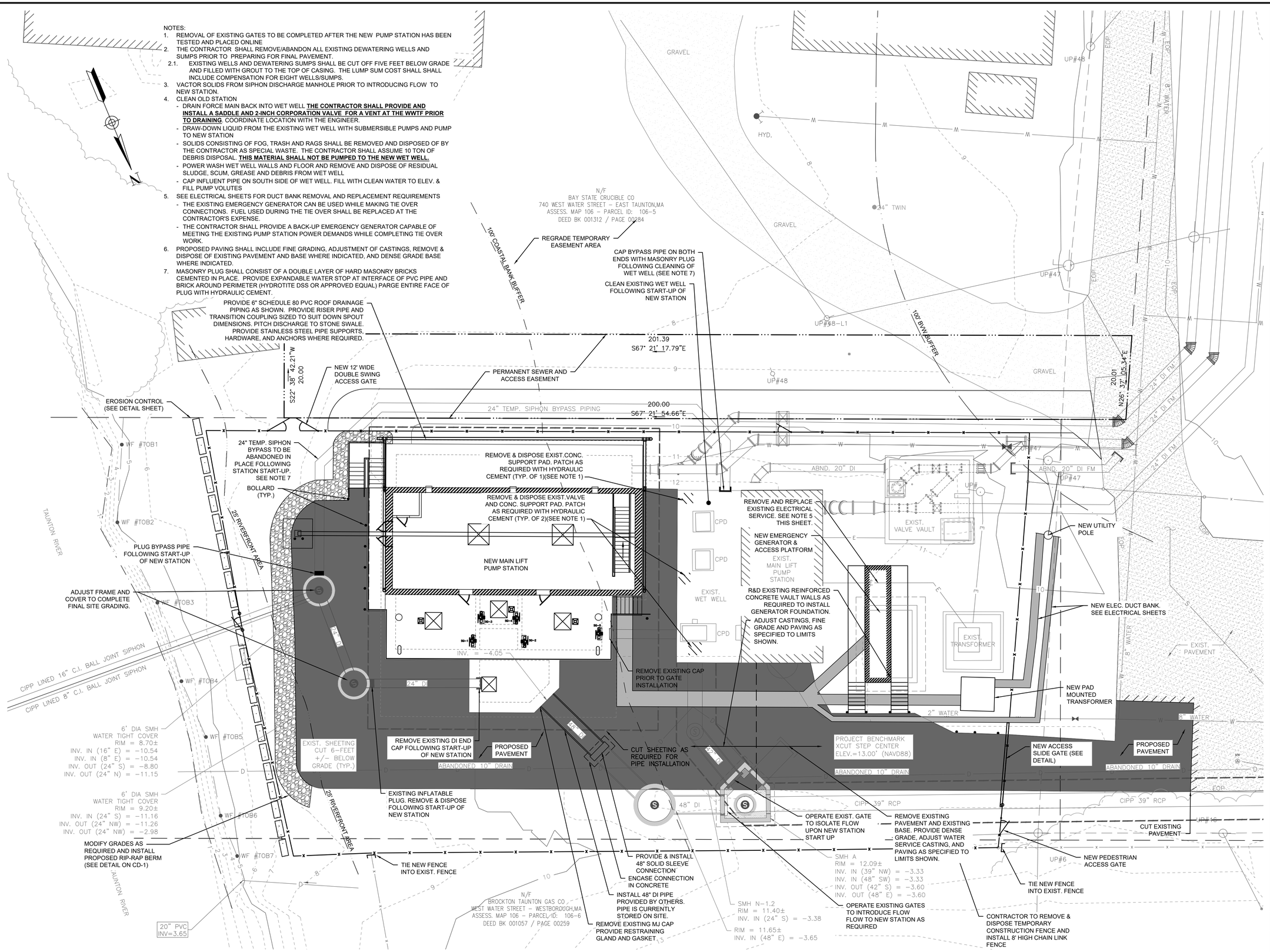

PREPARED BY

BETA

www.BETA-Inc.com

REGISTERED PROFESSIONAL

COMMONWEALTH OF MASSACHUSETTS
JOSEPH FEDERICO, JR.
No. 30863
REGISTERED PROFESSIONAL ENGINEER

SUBCONSULTANT

PROJECT

MAIN LIFT PUMP STATION IMPROVEMENTS

TAUNTON, MA

TITLE

PROPOSED SITE PLAN

NO.	REVISIONS	DATE

DRAWN BY:	BM
DESIGNED BY:	AJG
CHECKED BY:	CC
ISSUE DATE:	3/31/2022
BETA JOB NO.:	5530

SCALE

10 0 10 20

SCALE IN FEET: 1"=10'

UNLESS OTHERWISE NOTED OR CHANGED BY REPRODUCTION

SHEET NO.

C-2

3/28/2022 11:00 AM J:\TAUNTON\MAIN LIFT PUMP STATION\AUTOCAD\DRAWINGFILES\CONTRACT 3 - MAIN LIFT PS BUILDOUT CONTRACT\SITE PLAN - PROPOSED.DWG

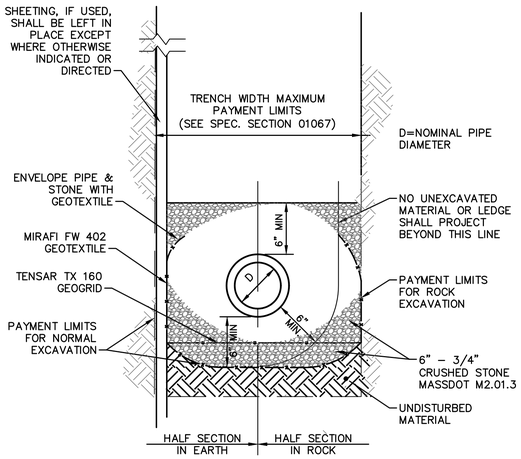

GRAVITY SEWER TRENCH

SCALE: NOT TO SCALE

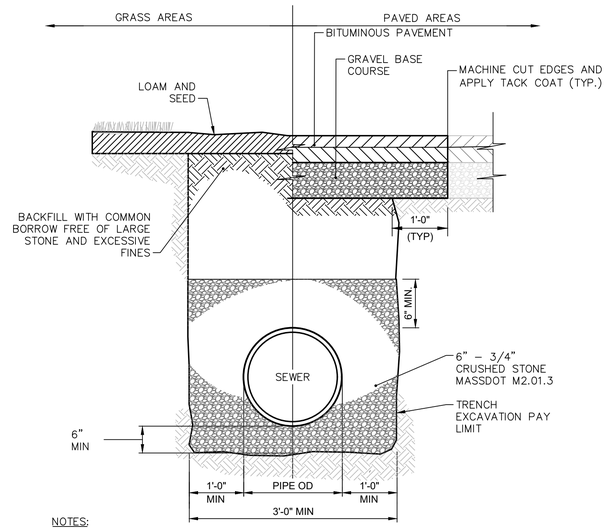

NOTES:

1. WHERE THE DISTANCE BETWEEN THE SAWCUT AND EDGE OF PAVEMENT IS 3' OR LESS, THE CONTRACTOR SHALL REPLACE THE PAVEMENT FROM THE TRENCH EDGE TO THE EXISTING EDGE OF PAVEMENT.
2. 3/4" DIA CRUSHED STONE SHALL BE USED AS BEDDING WHERE TRENCH IS BELOW THE GROUND WATER TABLE.

PIPE & BACKFILL DETAIL

SCALE: NOT TO SCALE

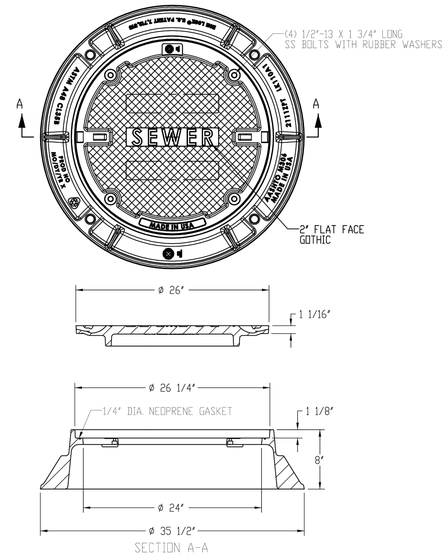

NOTES:

1. COVER SHALL BE EJIW 2111APT AND FRAME SHALL BE EJIW 2111ZPT OR APPROVED EQUAL.
2. FRAME AND COVER SHALL BE SET IN FULL BED OF MORTAR ON A MINIMUM OF 2 COURSES OF BRICK.

WATERTIGHT SEWER MANHOLE FRAME & COVER

SCALE: NOT TO SCALE

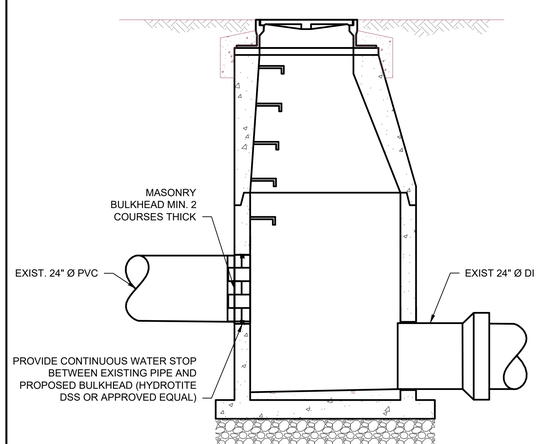

BRICK BULKHEAD DETAIL

SCALE: NOT TO SCALE

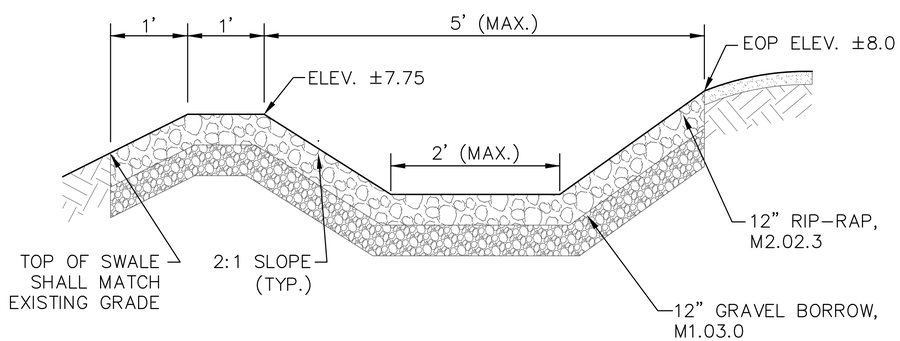

RIP RAP BERM DETAIL

SCALE: NOT TO SCALE

PREPARED BY

BETA

www.BETA-Inc.com

REGISTERED PROFESSIONAL

COMMONWEALTH OF MASSACHUSETTS
JOSEPH FEDERICO, JR.
No. 30863
REGISTERED PROFESSIONAL ENGINEER

SUBCONSULTANT

PROJECT

MAIN LIFT PUMP STATION IMPROVEMENTS

TAUNTON, MA

TITLE

CIVIL DETAILS I

NO.	REVISIONS	DATE

DRAWN BY:	BM
DESIGNED BY:	AJG
CHECKED BY:	CC
ISSUE DATE:	3/31/2022
BETA JOB NO.:	5530

SCALE

NONE

UNLESS OTHERWISE NOTED OR CHANGED BY REPRODUCTION

SHEET NO. CD-1

3/28/2022 11:00 AM J:\TAUNTON\MAIN LIFT PUMP STATION\AUTOCAD\DRAWINGFILES\CONTRACT 3 - MAIN LIFT PS BUILDOUT CONTRACT\DETAILS - CIVIL.DWG

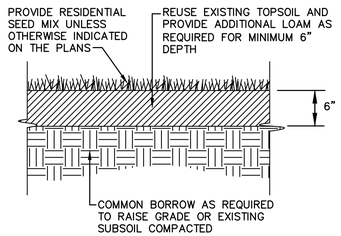

LOAM AND SEED DETAIL
NOT TO SCALE

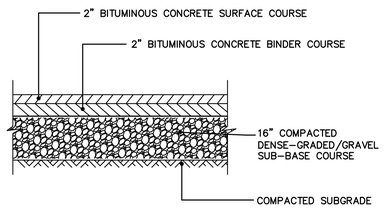

DRIVEWAY PAVEMENT DETAIL
SCALE: NOT TO SCALE

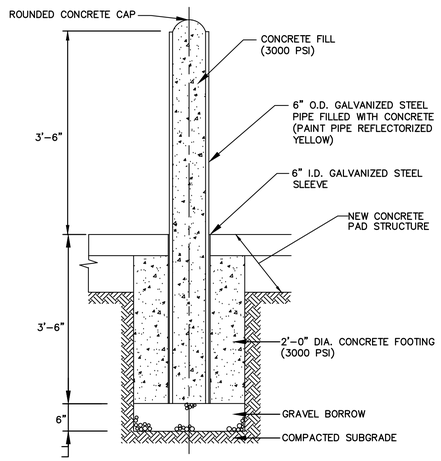

CONCRETE FILLED STEEL BOLLARD
SCALE: NOT TO SCALE

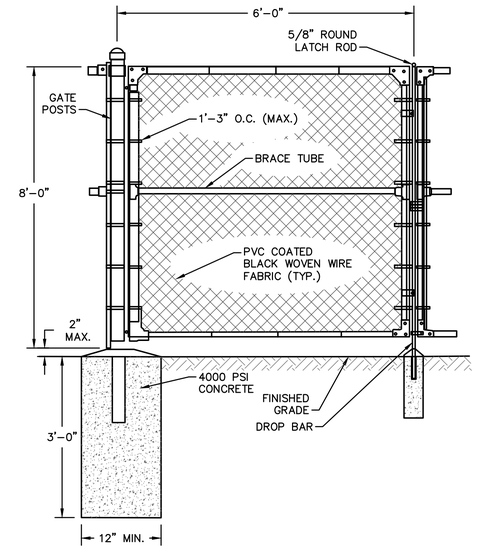

12' WIDE DOUBLE SWING GATE
SCALE: NOT TO SCALE

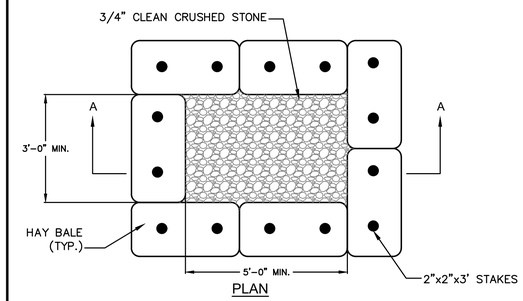

NOTE: ALL DEWATERING DISCHARGES SHALL BE THROUGH SEDIMENT CONTROL TRAPS, CONTRACTOR SHALL MAINTAIN AND CLEAN TRAP AS REQUIRED.

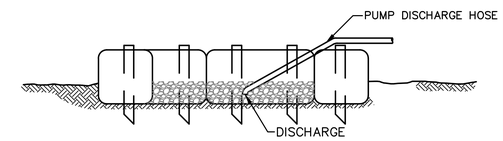

SECTION A-A

SEDIMENT CONTROL TRAP OPTION
SCALE: NOT TO SCALE

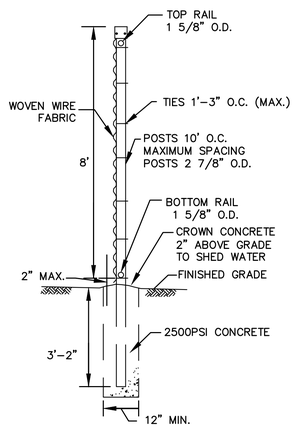

TYPICAL CHAIN-LINK FENCE SECTION DETAIL
SCALE: NOT TO SCALE

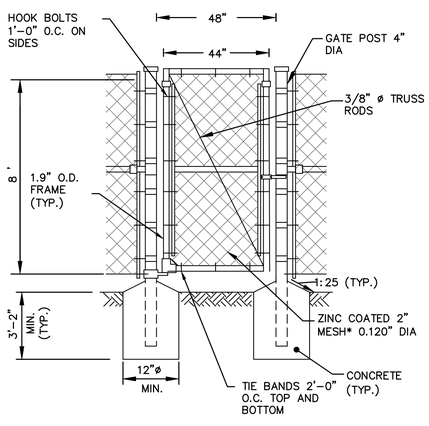

PEDESTRIAN GATE DETAIL
SCALE: NOT TO SCALE

* FABRIC: 2" WIRE MESH, 9 GAUGE WIRE, CLASS 2A PVC COATING EXTRUDED AND ADHERED TO ZINC COATED WIRE. COLOR: BLACK.

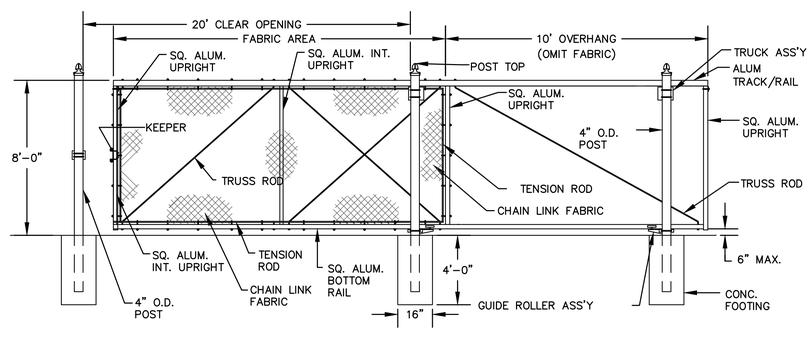

SINGLE CANTILEVERED SLIDE GATE DETAIL
SCALE: NOT TO SCALE

* GATE COMPONENTS ARE TO MEET OR EXCEED SPECIFIED FENCE REQUIREMENTS.

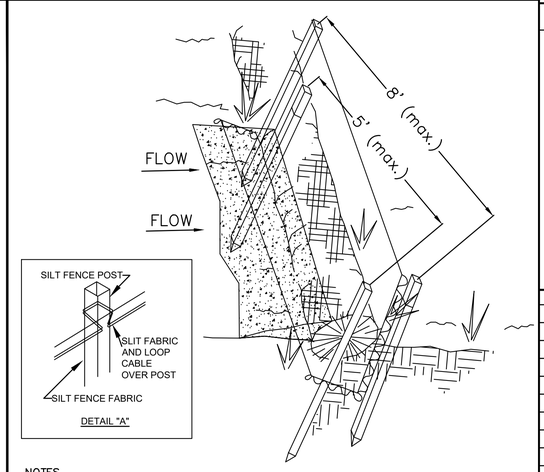

NOTES

1. STRAW WATTLES SHALL BE INSTALLED IN SHALLOW TRENCHES, DUG 3 TO 4-INCHES DEEP, PLACED IN A ROW WITH ENDS TIGHTLY ABUTTING THE ADJACENT WATTLES.

2. STRAW WATTLES SHALL BE SECURELY ANCHORED IN PLACE BY STAKES OR REBARS DRIVEN THOUGH THE WATTLES. THE FIRST STAKE IN EACH WATTLE SHALL BE ANGLED TOWARDS PREVIOUSLY LAID WATTLE TO FORCE WATTLES TOGETHER. ANCHOR STRAW WATTLES WITH A MINIMUM OF 5 STAKES PER WATTLE, INSTALLED "TIGHT" AGAINST SILT FENCE.

3. SILT FENCE TO BE INSTALLED A MIN. OF 6-INCHES DEEP, WITH A 6-INCH LIP TOED INTO SEDIMENT TO PREVENT MIGRATION BENEATH SILT FENCE.

4. EXCAVATED SOILS SHALL BE THOROUGHLY COMPACTED ONCE COMPLETE WITH THE INSTALLATION OF EROSION CONTROL DEVICES.

5. INSPECTION SHALL BE FREQUENT AND REPAIR OR REPLACEMENT SHALL BE MADE PROMPTLY AS NEEDED WITHOUT FURTHER COMPENSATION TO CONTRACTOR.

6. STRAW WATTLES AND SILT FENCE SHALL BE REMOVED WHEN THEY HAVE SERVED THEIR USEFUL-NESS SO AS NOT TO BLOCK OR IMPEDE STORM FLOW OR DRAINAGE.

TYPICAL STRAW WATTLE FOR EROSION CONTROL
SCALE: NOT TO SCALE

PREPARED BY

BETA
www.BETA-Inc.com

REGISTERED PROFESSIONAL

COMMONWEALTH OF MASSACHUSETTS
JOSEPH FEDERICO, JR.
No. 30863
REGISTERED PROFESSIONAL ENGINEER

SUBCONSULTANT

PROJECT

MAIN LIFT PUMP STATION IMPROVEMENTS

TAUNTON, MA

TITLE

CIVIL DETAILS II

NO.	REVISIONS	DATE

DRAWN BY:	BM
DESIGNED BY:	AJG
CHECKED BY:	CC
ISSUE DATE:	3/31/2022
BETA JOB NO.:	5530

SCALE

NONE

UNLESS OTHERWISE NOTED OR CHANGED BY REPRODUCTION

SHEET NO. CD-2

3/28/2022 11:00 AM J:\TAUNTON\MAIN LIFT PUMP STATION\AUTOCAD\DRAWINGFILES\CONTRACT 3 - MAIN LIFT PS BUILDOUT CONTRACT\DETAILS - CIVIL.DWG

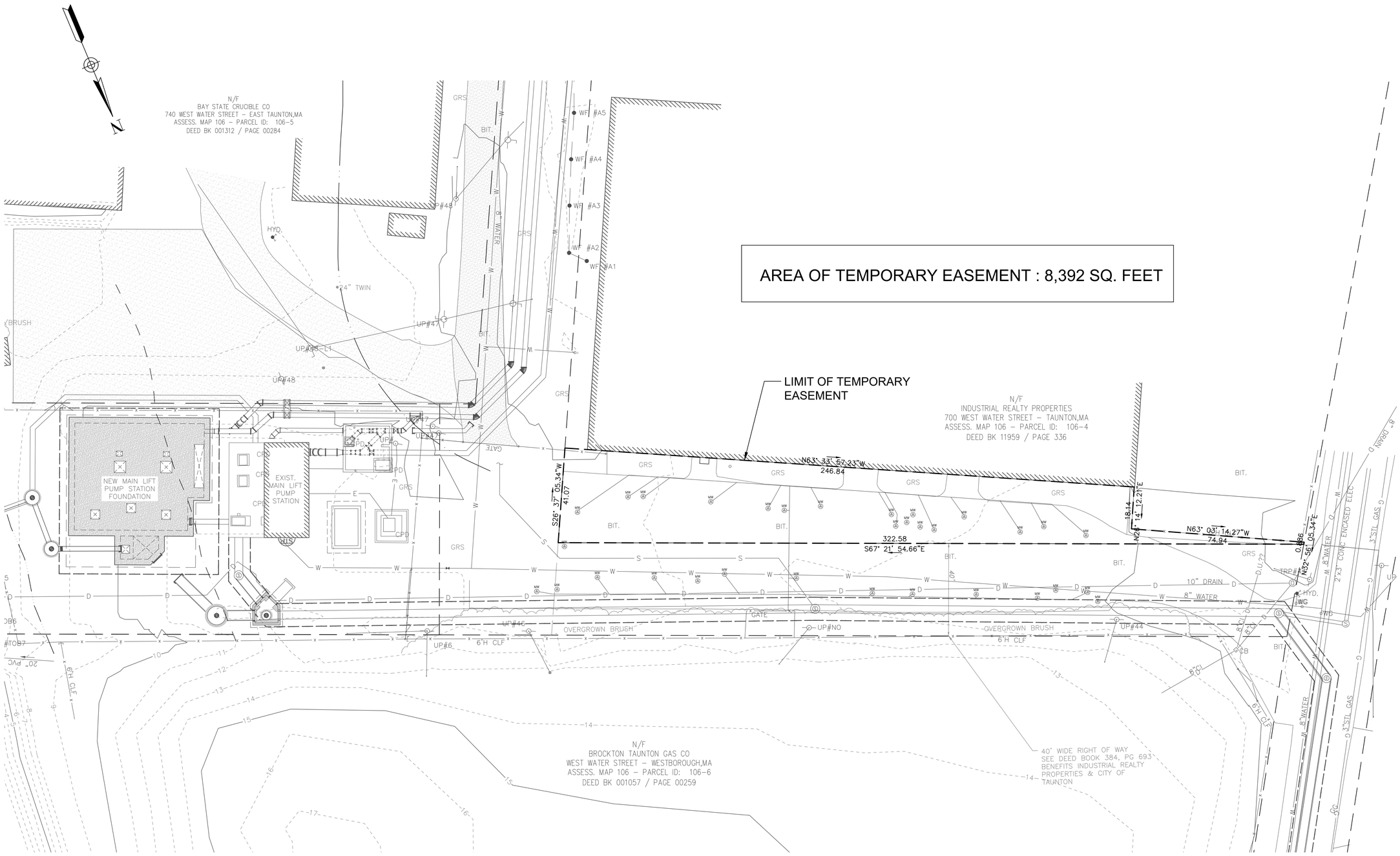

PREPARED BY

BETA

www.BETA-Inc.com

REGISTERED PROFESSIONAL

COMMONWEALTH OF MASSACHUSETTS
JOSEPH FEDERICO, JR.
No. 30863
REGISTERED PROFESSIONAL ENGINEER

SUBCONSULTANT

PROJECT

MAIN LIFT PUMP STATION IMPROVEMENTS

TAUNTON, MA

TITLE

EASEMENT PLAN 106-4

NO.	REVISIONS	DATE

DRAWN BY:	BM
DESIGNED BY:	AJG
CHECKED BY:	CC
ISSUE DATE:	3/31/2022
BETA JOB NO.:	5530

SCALE

20 0 20 40

SCALE IN FEET: 1"=20'

UNLESS OTHERWISE NOTED OR CHANGED BY REPRODUCTION

SHEET NO.

EP-1

3/28/2022 11:00 AM J:\TAUNTON\MAIN LIFT PUMP STATION\AUTOCAD\DRAWINGFILES\CONTRACT 3 - MAIN LIFT PS BUILDOUT CONTRACT\EASEMENT PLAN - 106-4.DWG

AREA OF TEMPORARY EASEMENT : 5,729 SQ, FEET

AREA OF PERMANENT EASEMENT : 4,010 SQ. FEET

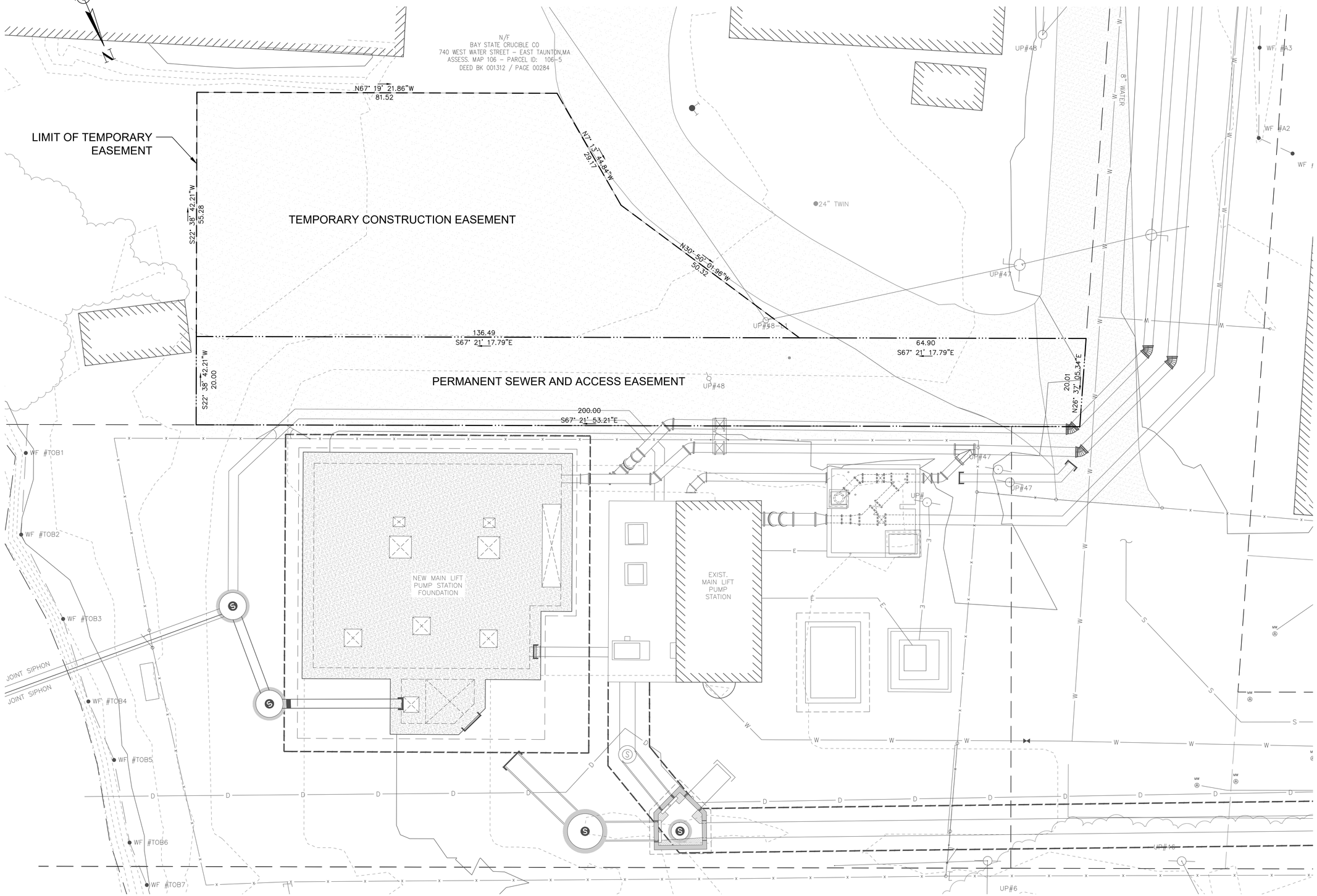

PREPARED BY

BETA

www.BETA-Inc.com

REGISTERED PROFESSIONAL

COMMONWEALTH OF MASSACHUSETTS
JOSEPH FEDERICO, JR.
No. 30863
REGISTERED PROFESSIONAL ENGINEER

SUBCONSULTANT

PROJECT

MAIN LIFT PUMP STATION IMPROVEMENTS

TAUNTON, MA

TITLE

EASEMENT PLAN 106-5

NO.	REVISIONS	DATE

DRAWN BY:	BM
DESIGNED BY:	AJG
CHECKED BY:	CC
ISSUE DATE:	3/31/2022
BETA JOB NO.:	5530

SCALE

10 0 10 20

SCALE IN FEET: 1"=10'

UNLESS OTHERWISE NOTED OR CHANGED BY REPRODUCTION

SHEET NO.

EP-2

3/28/2022 11:01 AM J:\TAUNTON\MAIN LIFT PUMP STATION\AUTOCAD\DRAWINGFILES\CONTRACT 3 - MAIN LIFT PS BUILDOUT CONTRACT\EASEMENT PLAN - 106-5.DWG

1. ALL WORK SHALL COMPLY WITH ALL APPLICABLE AND PREVAILING CODES, BY-LAWS AND ORDINANCES.

2. CONTRACTOR TO VERIFY ALL DIMENSIONS AND EXISTING CONDITIONS IN THE FIELD AND SHALL NOTIFY THE ENGINEER OF ANY DISCREPANCIES BEFORE STARTING WORK.

3. INFORMATION CALLED OUT ON ONE SHEET WILL BE BINDING AS IF CALLED FOR BY ALL. ANY WORK SHOWN OR REFERRED TO ON ANY ONE DOCUMENT SHALL BE PROVIDED AS THOUGH SHOWN ON ALL DOCUMENTS. DETAILS TAKE PRECEDENCE OVER GENERAL WORK, TYPICAL.

4. THE CHARACTER AND SCOPE OF THE WORK ARE ILLUSTRATED BY THE DRAWINGS. TO INTERPRET AND EXPLAIN THE DRAWINGS, OTHER WRITTEN AND GRAPHIC INFORMATION DEEMED NECESSARY WILL BE FURNISHED TO THE CONTRACTOR AND THE SUBCONTRACTORS WHEN AND AS REQUIRED BY THE WORK, AND IT IS UNDERSTOOD THAT SAID ADDITIONAL INFORMATION AND DRAWINGS SHALL BECOME PART OF THE CONTRACT DOCUMENTS.

5. THE CONTRACTOR AND SUBCONTRACTOR WILL NOTIFY THE ENGINEER OF ANY ERRORS, OMISSIONS, CONFLICTS OR AMBIGUITIES IN AND BETWEEN THE DRAWINGS THEMSELVES, OR WITH FIELD CONDITIONS, AND IN A TIMELY MANNER SHALL REQUEST CLARIFICATIONS PRIOR TO PROCEEDING WITH THAT PORTION OF THE WORK. IF SUCH NOTICE IS NOT FURNISHED TO THE ENGINEER, THE CONTRACTOR AND SUBCONTRACTOR WILL BE DEEMED TO HAVE INSPECTED THE DRAWINGS AND FOUND THEM IN PROPER FORM FOR EXECUTION.

6. THE CONTRACTOR IS RESPONSIBLE FOR OBTAINING NECESSARY PERMITS, AND SHALL FILE SEPARATE APPLICATIONS FOR PERMITS AND SHALL ARRANGE FOR ALL NECESSARY INSPECTIONS AND APPROVALS.

7. THE CONTRACT FOR CONSTRUCTION IS BASED ON THE STANDARDS OF QUALITY ESTABLISHED IN THE CONTRACT DOCUMENTS. SUBSTITUTIONS WILL ONLY BE CONSIDERED WHEN SUBSTANTIATED BY THE CONTRACTOR'S SUBMITTAL OF REQUIRED DATA.

8. THE CONTRACTOR AND SUBCONTRACTOR(S) SHALL SUBMIT ALL REQUESTS FOR SUBSTITUTIONS OF SPECIFIC ITEMS TO THE ENGINEER IN WRITING, FOR APPROVAL. WHERE "APPROVED EQUAL" IS USED, IT SHALL BE UNDERSTOOD THAT THE SUBSTITUTE SHALL BE BY JUDGMENT AND APPROVAL OF THE ENGINEER AND THAT NOTIFICATION SHALL BE MADE PRIOR TO INSTALLATION. THE CONTRACTOR IS RESPONSIBLE FOR PROVIDING ASSURANCE OF COMPLIANCE AND QUALIFICATION FOR ALL SUBSTITUTIONS AND CO-ORDINATION CHANGES THROUGH ALL DISCIPLINES.

9. THE CONTRACTOR AND SUBCONTRACTOR(S) SHALL SUBMIT MANUFACTURER'S "CUTS"/PRODUCT INFORMATION OF ITEMS FOR THE WORK, AND SHOP DRAWINGS AND SAMPLES AS REQUIRED BY THE ENGINEER. WORK AFFECTED BY THESE SUBMISSIONS SHALL NOT PROCEED PRIOR TO RECEIPT OF THE ENGINEER'S APPROVAL.

10. THE APPROVAL OF SHOP DRAWINGS AND SUBMITTALS SHALL BE FOR COMPLIANCE WITH DESIGN INTENT, AND SHALL BE GENERAL AND/OR FOR AESTHETIC INTERPRETATION, AND, EXCEPT AS OTHERWISE INDICATED, SHALL NOT BE CONSTRUED AS RELIEVING THE CONTRACTOR AND SUBCONTRACTOR OF RESPONSIBILITY FOR ERRORS IN DETAILS, DIMENSIONS OR OTHERWISE, WHICH MAY EXIST. FURTHERMORE, APPROVAL OF SHOP DRAWINGS AND SUBMITTALS SHALL NOT BE CONSTRUED AS ALLOWING ANY DEPARTURE FROM ADDITIONAL DETAILS OR INSTRUCTIONS PREVIOUSLY FURNISHED BY THE ENGINEER.

11. STATEMENT OF INTENT: THE INTENT OF THE PROJECT IS TO COMPLETE THE WORK DESCRIBED IN THE DRAWINGS AND SPECIFICATIONS FOR THE CONSTRUCTION OF THE TAUNTON PUMP STATION REPLACEMENT, TAUNTON, MA.

12. THE INTENT OF THE DOCUMENTS IS TO DESCRIBE THE WORK NECESSARY FOR THE PROJECT TO BE COMPLETE, USABLE FOR ITS INTENDED PURPOSE, AND FULLY FUNCTIONAL AT THE CONCLUSION OF THE PROJECT. ALL REQUIRED STRUCTURAL, MECHANICAL, ELECTRICAL, PLUMBING AND FIRE-PROTECTION WORK IS TO BE INCLUDED.

13. ACCEPTANCE OF DOCUMENTS: THE CONTRACTOR AND SUBCONTRACTORS ARE TO REVIEW THE DOCUMENTS AND EXAMINE THE SITE. EXECUTION OF A CONTRACT FOR CONSTRUCTION WILL CONSTITUTE ACCEPTANCE BY THE CONTRACTOR AND SUBCONTRACTOR(S) OF THE ADEQUACY OF THE DOCUMENTS TO ACHIEVE THE INTENT OF THE WORK.

14. THE CONTRACTOR SHALL PROVIDE FIRE-TREATED-BLOCKING AT ALL CEILINGS, FLOORS, AND FURRED-DOWN SPACES. FIRE-STOPPING AND SMOKE SEAL SHALL BE PROVIDED WHERE FIRE RATED OCCUPANCIES AND ASSEMBLIES MEET.

15. THE CONTRACTOR SHALL PROTECT ALL EXISTING SURFACES, MATERIALS AND ASSEMBLIES DURING THE CONSTRUCTION PERIOD.

16. THE CONTRACTOR IS RESPONSIBLE FOR OBTAINING FIRE DEPARTMENT FIRE-WATCH AS REQUIRED BY CODES AND ORDINANCES WHENEVER OPEN FLAME OR WELDING IS REQUIRED.

17. ALL LIFE-SAFETY DEVICES SHALL BE (HARD-WIRE) PROVIDED AS REQUIRED BY NATIONAL AND LOCAL CODES, ORDINANCES AND REGULATIONS.

18. THE CONTRACTOR SHALL MAKE SAFE ALL EXISTING AND NEW PLUMBING, FIRE-PROTECTION, MECHANICAL AND ELECTRICAL SERVICES AND UTILITIES ON SITE.

19. ALL DEBRIS, DEMOLITION AND CONSTRUCTION WASTE SHALL BE REMOVED FROM THE SITE AND DISPOSED OF IN A SAFE AND LEGAL MANNER. RECYCLING IS STRONGLY ENCOURAGED. ANY AND ALL ITEMS SCHEDULED FOR REMOVAL OR DEMOLITION WITH SALVAGE OR HISTORICAL VALUE SHALL REMAIN THE PROPERTY OF THE OWNER - THESE ITEMS SHALL BE CAREFULLY REMOVED AND PROTECTED AND TURNED-OVER TO THE OWNER.

20. THE CONTRACTOR SHALL MAINTAIN THE SITE IN A SAFE, NEAT AND ORDERLY MANNER.

21. THE CONTRACTOR SHALL PATCH OR REPLACE ALL EXISTING SURFACES WHERE SELECTIVE DEMOLITION MAY HAVE CAUSED DAMAGE DURING THE CONSTRUCTION.

22. THE CONTRACTOR SHALL ENSURE THAT NO WORK SHALL OCCUR OUTSIDE THE PROPOSED LIMIT OF WORK AREA AS NOTED ON THE DOCUMENTS AND AS NOTED HEREIN, WITHOUT PRIOR WRITTEN AUTHORIZATION FROM THE ENGINEER.

23. THE CONTRACTOR SHALL ASSUME ALL RESPONSIBILITY AND LIABILITY FOR DAMAGE TO, AND SHALL TAKE CARE AND CAUTION TO PROTECT ALL POWER, TELEPHONE, TELECOMMUNICATIONS, CABLE TV, ETCETERA SYSTEMS, INCLUDING CONDUIT, LINES, WIRES AND CABLES, WHETHER CONCEALED, UNDERGROUND OR OVERHEAD.

24. THE CONTRACTOR SHALL PROVIDE A CONSTRUCTION ACCESS PLAN DETAILING PROPOSED ACCESS REQUIREMENTS, LAY-DOWN AND STAGING AREAS, INCLUDING ACCESS FOR TRUCKING TO AND FROM THE SITE DURING CONSTRUCTION. THIS PLAN REQUIRES THE APPROVAL OF THE ENGINEER PRIOR TO COMMENCEMENT OF CONSTRUCTION.

25. CONTRACTOR SHALL REVIEW ALL ELECTRICAL DEVICE ROUGH-IN LOCATIONS PRIOR TO INSTALLATION AND SHALL COORDINATE BETWEEN TRADES WHEN LOCATING DEVICES IN CONCRETE SLABS AND/OR COLUMNS.

PREPARED BY:

BETA
www.BETA-Inc.com
PLOT DATE: 8/29/2021 3:59:16 PM

REGISTERED PROFESSIONAL

REGISTERED ARCHITECT
THOMAS D. MCGRAW
No. 6938
BOSTON
MASS
COMMONWEALTH OF MASSACHUSETTS

SUBCONSULTANT:

DSK Dewing Schmid Kearns
ARCHITECTS + PLANNERS

30 Monument Square
Suite 200B
Concord, MA
01742
978.371.7500

280 Elm Street
South Dartmouth, MA
02748
508.999.0440

PROJECT

MAIN LIFT PUMP STATION IMPROVEMENTS

TAUNTON, MA

TITLE

GENERAL NOTES

REVISIONS

NO.	DESCRIPTION	DATE

DRAWN BY: TM

DESIGNED BY: DSK

CHECKED BY: MPS

DSK JOB No.: TPS-1795 DATE: 3/31/2022

BETA JOB No.: 5530

SCALE

UNLESS OTHERWISE NOTED OR CHANGED BY REPRODUCTION

CONTRACT 2

SHEET NO.

A-01

P:\PROJECTS\1510 NPS - NEWBURYPORT PUMP STATION\600-NPS-DWGS\601-REVIT\FAMILIES\TITLEBLOCKS\KDG_Arch D 24x36 Vertical Title - BETA

ABBREVIATIONS

AFF ABOVE FINISHED FLOOR
AH ACCESS HATCH
AP ACCESS PANEL
ACOUS ACOUSTIC
ACT ACOUSTIC CEILING TILE
ACRY ACRYLIC
ADD ADDENDUM
ADJ ADJACENT
ADJT ADJUSTABLE
AGG AGGREGATE
A/C AIR CONDITIONER (ING)
ALT ALTERNATE
ADA AMERICAN W/ DISABILITIES ACT
AB ANCHOR BOLT
ANOD ANODIZED
APPD APPROVED
APPX APPROXIMATE
ARCH ARCHITECT(URAL)
AD AREA DRAIN
AUTH AUTHORIZED
AUTO AUTOMATIC
AVG AVERAGE

B TO B BACK TO BACK
BB BALL BEARING
BSMT BASEMENT
BRG BEARING
BM BENCHMARK
BVL BEVELED
BITUM BITUMINOUS
BLK BLOCK
BLKG BLOCKING
BD BOARD
BF BOTH FACES
BS BOTH SIDES
BW BOTH WAYS
BOTT BOTTOM
BRKT BRACKET
BR BRICK
BC BRICK COURSE
BRZ BRONZE
BLDG BUILDING
BUR BUILT-UP ROOFING
BBD BULLETIN BOARD

CAB CABINET
CAIS CAISSON
CPT CARPET
CI CAST IRON
CIP CAST-IN-PLACE
CB CATCH BASIN
CP CATHODIC PROTECTION
CLG CEILING
CLG HT CEILING HEIGHT
CEM CEMENT
C TO C CENTER TO CENTER
CM CENTIMETERS
CMT CERAMIC MOSAIC TILE
CT CERAMIC TILE
CER CERAMIC
CHBD CHALKBOARD
CHAM CHAMFER
CR CHROMIUM (PLATED)
CIR CIRCUMFERENCE
CO CLEANOUT
CLR CLEAR
CLO CLOSET
COEF COEFFICIENT
CU COEFFICIENT OF UTILIZATION
CW COLD WATER
COL COLUMN
COMB COMBINATION
COMPT COMPARTMENT
COMPR COMPRESSS(ED)(ION)(IBLE)
CONC CONCRETE
CMU CONCRETE MASONRY UNIT
CONN CONNECTION
CONST CONSTRUCTOIN
CONT COINTUE, CONTINUOUS
CLL CONTRACT LIMIT LINE
CONTR CONTRACTOR
CJ CONTROL JOINT
CONV CONVENIENCE
CPR COPPER
CORR CORRIDOR
CTR COUNTER
CFL COUNTERFLASHING
CS COUNTERSINK
CRS COURSE
CU CUBIC
CFT CUBIC FOOT
CY CUBIC YARD
DPR DAMPROOFING
DP DAMPER_INE
DB DECIBEL
DEG DEGREE
DEMO DEMOLITION
DMT DEMOUNTABLE
DEPT DEPARTMENT
DEP DEPRESSED
DTL DETAIL
DIAG DIAGONAL
DIA DIAMETER
DIM DIMENSION
DISP DISPENSER
DO DITTO
DIV DIVISION
DR DOOR
DBL DOUBLE
DA DOUBLE-ACTING
DWL DOWEL
DN DOWN
DS DOWNSPOUT
DR DRAIN
DT DRAINTILE
DWR DRAWER
DWG DRAWING
DF DRINKING FOUNTAIN
DW DISHWASHER

EF EACH FACE
EW EACH WAY
E EAST
ELB ELBOW
ELEC ELECTRIC(AL)
EWH ELECTRIC WATER HEATER
EWC ELECTRIC WATER COOLER
EL ELEVATION
ELEV ELEVATOR
EMER EMERGENCY
ENCL ENCLOSURE
ENGR ENGINEER

ENT ENTRANCE
EQ EQUAL
EQUIP EQUIPMENT
ESC ESCALATOR
EST ESTIMATE
EXC EXCAVATE
EXEC EXECUTIVE
EXH EXHAUST
EXIST EXISTING
EJ EXPANSION JOINT
EXP EXPOSED
EXT EXTERIOR
EXS EXTRA STRONG

FAB FABRICATE
FB FACE BRICK
FOC FACE OF CONCRETE
FOF FACE OF FINISH
FOM FACE OF MASONRY
FOS FACE OF STUDS
F TO F FACE TO FACE
FF FACTORY FINISH
FT FEET,FOOT
FBD FIBERBOARD
FGL FIBERGLASS
FIG FIGURE
FIN FINISH
FFL FINISHED FLOOR
FA FIRE ALARM
FDC FIRE DEPARTMENT CONNECTION
FEC FIRE EXTINGUISHER CABINET
FVC FIRE VALVE VABINET
FHC FIRE HOSE CABINET
FHS FIRE HOSE STATION
FHY FIRE HYDRANT
FRC FIRE-RESISTANT COATING
FRT FIRE-RETARDANT
FL FIRE LINE
FP FIREPROOF
FR FIRE RESISTANT
FLG FLASHING
FH FLAT HEAD
FLEX FLEXIBLE
FL FLOOR
FD FLOOR DRAIN
FLRG FLOORING
FS FLOOR SINK
FLUOR FLUORESCENT
FJ FLUSH JOINT
FTG FOOTING
FDNT FOUNDATION
FRM(G) FRAME(D),(ING)
FS FULL SIZE
FURN FURNISH
FBO FURNISHED BY OTHERS
FUR FURRED(ING)
GAT GAGE OR GAUGE
GAL GALLON
GALV GALVANIZED
GI GALVANIZED IRON
GP GALVANIZED PIPE
GSM GLAVANIZED SHEET METAL
G GAS
GKT GASKET
GEN'L GENERAL
GC GENERAL CONTRACTOR
GEN GENERATOR
GL GLASS,GLAZING
GLF GLASS FIBER
GMU GLAZED MASONRY UNIT
GST GLAZED STRUCTURAL TILE
GOVT GOVERNMENT
GB GRAB BAR
GD GRADE; GRADING
GRT GRATING
GVL GRAVEL
GR GRILLE
GRND GROUND
GF GROUND FACE
GFCI GROUND FAULT CIRCUIT INTERUPTOR
GT GROUT
GD GUTTER DRAIN
GWB GYPSUM WALL BOARD
GPL GYPSUM PLASTER
GPT GYPSUM TILE
HC HANDICAP
HGR HANGER
HBD HARDBOARD
HRDW HARDWARE
HOWD HARDWOOD
HD HEAD
HDR HEADER
HTR HEATER
HTG HEATING
HVAC HEATING/VENT/AIR COND.
HBY HEAVY
HD HEAVY DUTY
HT HEIGHT
HEX HEXAGONAL
HWY HIGHWAY
HC HOLLOW CORE
HM HOLLOW METAL
HOR HORIZONTAL
HP HORSEPOWER
HB HOSE BIB
HW HOTWATER
HWH HOT WATER HEATER
HSG HOUSING
HYD HYDRAULIC

INC INCANDESCENT
IN INCH
INCIN INCINERATOR
INCL INCLUDE(D),(ING)
INFO INFORMATION
ID INSIDE DIAMETER
INS INSULATION
INT INTERIOR
INTM INTERMEDIATE
INV INVERT
IE INVERT ELEVAITON
IP IRON PIPE
IPS IRON-PIPE SIZE

JAN JANITOR
JT JOINT
JF JOINT FILLER
J JOIST
JCT JUNCTION
JB JUNCTION BOX

LB LAG BOLT OR POUND
LAM LAMINATE
LDG LANDING
LAV LAVATORY
LH LEFT HAND
L LENGTH
LIB LIBRARY
LT LIGHT
LTG LIGHTING
LP LIGHTPROOF
LW LIGHTWEIGHT
LF LINEAR FEET
LTL LINTEL
LL LIVE LOAD
LVR LOUVER
LP LOW PRESSURE
LPT LOW POINT
LV LOW VOLTAGE

MACH MACHINE
MB MACHINE BOLT
MH MANHOLE
MAN MANUAL
MFR MANUFACTURE(R)
MFD MANUFACTURED
MFG MANUFACTURING
MK MARK
MAS MASONRY
MATL MATERIAL(S)
MAX MAXIMUM
MECH MECHANICAL
MC MEDICINE CABINET
MED MEDIUM
MBR MEMBER
MMB MEMBRANE
MV MERCURY VAPOR
MTL METAL
MFD METAL FLOOR DECKING
MRD METAL ROOF DECKING
M METER
MEZZ MEZZANINE
MI MILES
MM MILLIMETER
MWK MILLWORK
MIN MINIMUM
MIR MIRROR
MISC MISCELLANEOUS
M.O. MASONRY OPENING
MOD MODULE; MODULAR
ML MODULE LINE
MLD MOLDING; MOULDING
MR MOP RECEPTOR
MTR MOTOR
MT MOUNT(ED); (ING)
MOV MOVABLE
MULL MULLION
NAT NATURAL
NI NICKEL
NRC NOISE REDUCTION COEFFICIENT
NOM NORMAL
N NORTH
NIC NOT IN CONTRACT
NTS NOT TO SCALE
NO NUMBER

OFF C OFF CENTER
OFF OFFICE
OC ON CENTER(S)
OSD OPEN SITE DRAIN
OPG OPENING
OJ OPEN-WEB JOIST
OPP OPPOSITE
OPH OPPOSITE HAND
OPS OPPOSITE SURFACE
OTS OPEN TO STRUCTURE
OZ OUNZE
OD OUTSIDE DIAMETER
OA OVERALL
OH OVERHEAD
PNT PAINT
PR PAIR
PNL PANEL
PAR PARALLEL
PBD PARTICLE BOARD
PTN PARTITION
PVMT PAVEMENT
PEN PENETRATION
PNTHS PENTHOUSE
PERF PERFORATED
PC PIECE
PLAS PLASTER
PLAM PLASTIC LAMINATE
PL PLATE
PG PLATE GLASS
PD PLAZA DRAIN
PLBG PLUMBING
PS PLUMBING STACK
PLWD PLYWOOD
PT PRESSURE TREATED
PI POINT OF INTERSECTION
POL POLISHED
PVC POLYVINYL CHLORIDE
PORC PORCELAIN
PE PORCELAIN ENAMEL
PTC POST-TENSIONED CONCRETE
PCF POUNDS PER SQUARE FOOT
PLF POUNDS PER LINEAR FOOT
PSI POUNDS PER SQUARE INCH
PWR POWER
PC PRECAST CONCRETE
PFB PREFAB
PFN PREFINISHED
PRF PREFORMED
PSC PRESTRESSED CONCRETE
PROT PROTECTION
PL PROPERTY LINE
PA PUBLIC ADDRESS
QTY QUANTITY
QT QUART
QUT QUARRY TILE

RBT RABBET
RAD RADIUS
RL RAILING
RR RAILROAD
RWC RAINWATER CONNECTION
RECP RECEPTACLE
REF REFERENCE
RFL REFLECT(ED),(IVE),(OR)
RCP REFLECTED CEILING PLAN
REFR REFRIGERATOR
REG REGISTER
REINF REINFORCE(D),(ING)

RC REMOTE CONTROL
REM REMOVE, REMOVABLE
REQ REQUIRE(D)
RES RESILIENT
RA RETURN AIR
RVS REVERSE (SIDE), REVISE(D)
REV REVISION
RH RIGHT HAND
ROW RIGHT OF WAY
R RISER
ROB ROD-OUT BASIN
RD ROOF DRAIN
RFG ROOFING
RFH ROOF HATCH
RM ROOM
RO ROUGH OPENING
RB RUBBER BASE
RT RUBBER TILE

S SOUTH
SFGL SAFETY GLASS
SALV SALVAGE
SAN SANITARY
SCHED SCHEDULE
SECY SECRETARY
SECT SECTION
SSNK SERVICE SINK
SB SETTING BASIN
SHT SHEET
SG SHEET GLASS
SM SHEET METAL
SH SHOWER
SIM SIMILAR
SKL SKYLIGHT
SL SLEEVE
SD SMOKE DETECTOR
SC SOLID CORE
SP SOUND PROOF
SPK SPEAKER
SPEC SPECIFICATION
SBL SPLASH BLOCK
SPLR SPRINKLER
SQ SQUARE
SS STAINLESS STEEL
SP STANDPIPE
STD STANDARD
STA STATION
STM STEAM
STL STEEL
ST STONE
STO STORAGE
SRD STORM DRAIN
STR STRUCTURAL
SCT STRUCTURAL CLAY TILE
SSD SUB-SOIL DRAIN
SUPT SUPERINTENDENT
SUPP SUPPLEMENT
SUS SUSPEND(ED)
SW SWITCH
SWBD SWITCHBOARD
SWGR SITCHGEAR
SYM SYMMETRY(ICAL)
TYN TREADETIC
TKBD TACKBOARD
TKS TACKSTRIP
TAN TANGENT
TEL TELEPHONE
TV TELEVISION
TEMP TEMPERATURE
TC TERRA COTTA
TZ TERRAZZO
THK THICK(NESS)
THD THREAD
THRESH THRESHOLD
THRU THROUGH
TLT TOILET
TPD TOILET PAPER DISPENSER
T.O. TOP OF (WALL, DRAIN, ETC)
TOL TOLERANCE
T&G TONGUE&GROOVE
TRANS TRANSFORMER
TD TRENCH DRAIN
TYP TYPICAL

UNEX UNEXCAVATED
UL UNDERWRITER'S LABORATORIES
UFAS UNIFORM FEDERAL ACCESSIBILITY
UH UNIT HEATER
UC UNDERCUT
UNF UNFINISHED
UNO UNLESS NOTED OTHERWISE
UR URINAL
V VOLT
VPBR VAPOR BARRIER
VP VENT PIPE
VTR VENT THRU ROOF
VRM VERMICULITE
VERT VERTICAL
VG VERTICAL GRAIN
VEST VESTIBULE
VB VINYL BASE
VF VINYL FACRIC
VT VINYL TILE
VWC VINUL WALL COVERING
VCP VITRIFIED CLAY PIPE
VJT V-JOINT(ED)
VOL VOLUME

W WEST
WA WATER
WB WOOD BASE
WC WATER CLOSET
WD WOOD
WDW WINDOW
WF WIDE FLANGE
WH WATER HEATER
WI WIRE, WROUGHT IRON
WLD WELD
WLH WALL HYDRANT
W.O. WINDOW OPENING
WMTR WATER METER
WP WATERPROOF(ING), WORKING POINT
WR WATER REPELLENT
WS WATERSTOP
WSCT WAINSCOT
WT WEIGHT
WTH WIDTH
WTW WALL TO WALL
WWF WELDED WIRE FABRIC
W/ WITH

MATERIAL LEGEND

UNDISTURBED COMPACTED SOIL
UNDISTURBED SOIL BACKFILL
ASPHALT PAVEMENT
BITUMINOUS SETTING BED
SAND
CONCRETE
GROUT
BRICK
CONC. BLOCK
STEEL
ALUMINIUM
STONE
FINISH WOOD
WOOD BLOCKING
PLASTIC
PARTICLE BOARD
GYPSUM WALL BOARD
PLYWOOD
CARPETING
RESILIENT FLOORING
PLASTIC LAMINATE
GLAZING
GLASS BLOCK
ACOUSTIC CEILING BOARD
BATT / LOOSE INSULATION
WATERPROOFING
RIGID INSULATION
SEALANT W/BACKER ROD
PRE-MOLDED FILLER
COMPRESSIBLE FILLER
DEMOLITION

SYMBOL LEGEND

DRAWING NO. / SHEET NO. (1 / A101) — EXTERIOR ELEVATION TARGET
DETAIL NO. / SHEET NO. (1 / A101) — DETAIL/ WALL SECTION TARGET
SHEET NO. / DRAWING NO. (A101; 1, 2, 3, 4) — INTERIOR ELEVATION TARGET
DRAWING NO. / SHEET NO. (1 / A101) — PARTIAL PLAN AND DETAIL TARGET
WALL TYPE NO. (1) — PARTITION TYPE
ROOM NO. (ROOM NAME 0001) — ROOM NAME AND NUMBER
DOOR NO. (2B001-01) — DOOR NUMBER
WINDOW NO. (W1B-01) — WINDOW TYPE SYMBOL
A101 — NEW POINT ELEVATION
234.5 — EXISTING POINT ELEVATION
469 — EXISTING CONTOUR ELEVATION
469 — NEW CONTOUR ELEVATION
REVISION NO. (1) — DRAWING REVISION TAG
T/FINISHED FIRST FLOOR EL. +1'-0" — VERTICAL ELEVATION
MATCH LINE SEE — MATCH LINE
PROPERTY LINE
BREAK LINE
1, A — COLUMN SYMBOLS AND CENTER LINES
NORTH ARROW
G — NATURAL GAS STUB
HOSE BIB
AREA OF RESCUE ASSISTANCE (30" X 48")
HANDICAP CLEAR SPACE (5'-0" DIA)
ACCESS HATCH

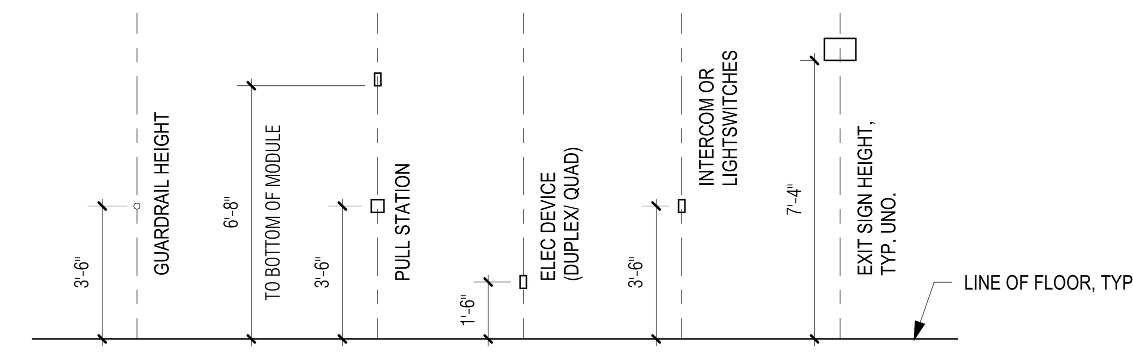

1 TYP. MOUNTING HEIGHTS
1/4" = 1'-0"

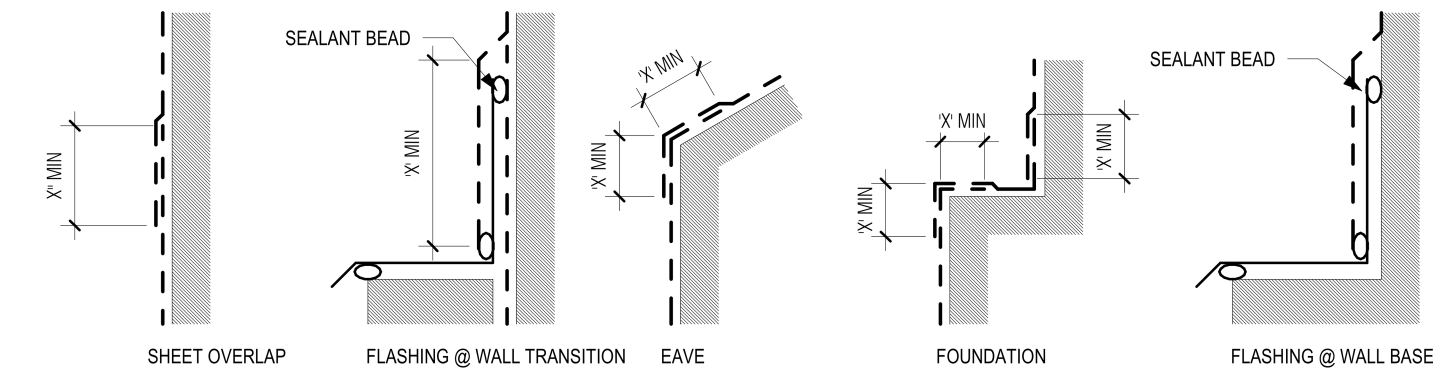

2 WATERPROOFING DETAILS
3" = 1'-0"

'X' = PER MANUFACTURER'S RECOMMENDATIONS, TYP.

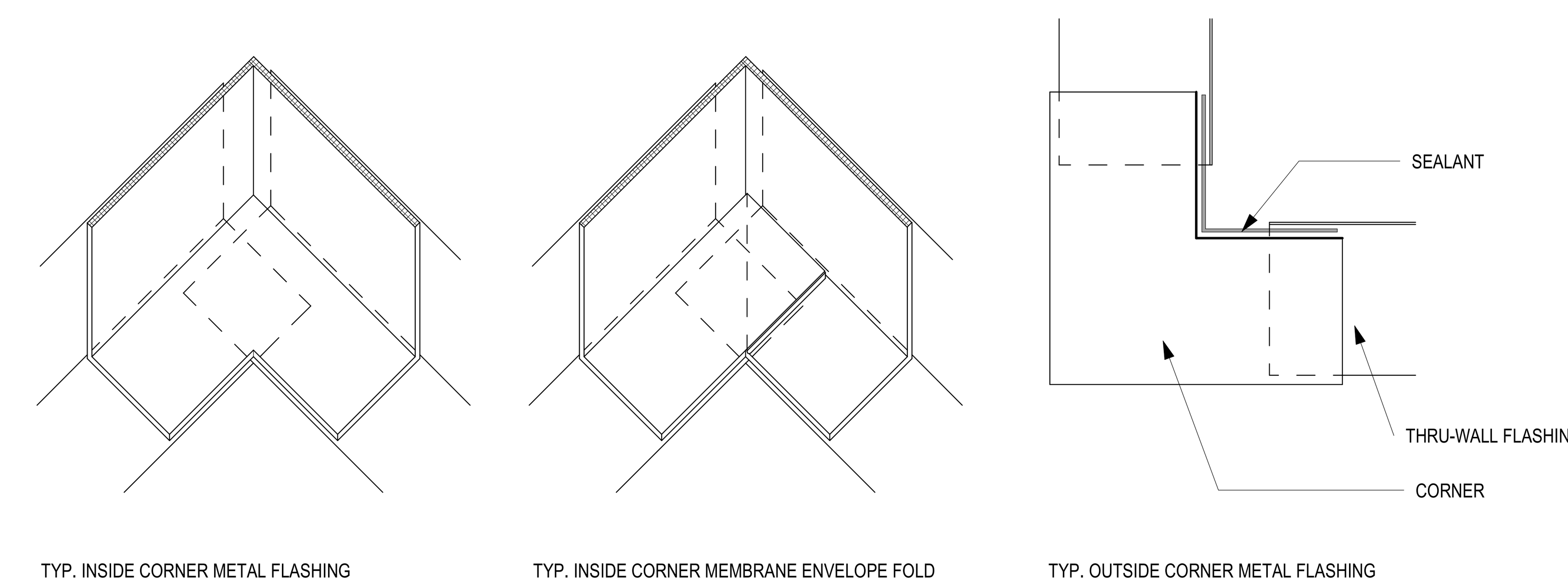

3 WATERPROOFING DETAILS 3D
3" = 1'-0"

ELECTRICAL/ALARMS

FIRE ALARM AUDIO
STROBE
P — MANUAL ALARM PULL STATION

POWER/ UTILITIES

DATA
TEL/ DATA
QUAD RECEPTACLE
DUPLEX RECEPTACLE
GF — GROUND FAULT INTERPRETER
WP — WEATHER PROOF GROUND FAULT INTERPRETER
DIMMABLE RECEPTACLE, WALL MOUNTED
FLOOR MOUNTED DUPLEX
FLOOR MOUNTED QUAD
FLOOR MTD. DIMMABLE RECEPTACLE
FLOOR MTD. DATA RECEPTACLE
$LV — SWITCH: LOW VOLTAGE LIGHT
$F — SWITCH, FAN
SWITCH DIGITAL TIMER
SWITCH DIGITAL TIMER
OCCUPANCY SENSOR
FD — FLOOR DRAIN

ELECTRICAL / FIRE ALARM

OS — OCCUPANCY SENSOR, CEILING MOUNTED
S — OCCUPANCY SENSOR, WALL MOUNTED
H — HEAT SENSOR
H — HEAT AUDIO SENSOR
S — SMOKE DETECTOR
S — SMOKE DETECTOR - AUDIO
C — CARBON DETECTOR
EXIT LIGHT, WALL MOUNTED
EXIT LIGHT, CEILING MOUNTED

HVAC

AC - SUPPLY/RETURN UNITS
RETURN GRILLE
SUPPLY GRILLE

FIRE PROTECTION

SPRINKLER - CONCEALED PENDANT
DP — SPRINKLER - DRY PENDANT HEAD
SPRINKLER - UPRIGHT SPRINKLER HEAD

PREPARED BY:
BETA
www.BETA-Inc.com
PLOT DATE: 8/29/2021 3:59:17 PM

REGISTERED PROFESSIONAL
REGISTERED ARCHITECT THOMAS D. KEARNS No. 5938 BOSTON MASS COMMONWEALTH OF MASSACHUSETTS

SUBCONSULTANT:
DSK Dewing Schmid Kearns
ARCHITECTS + PLANNERS
30 Monument Square
Suite 200B
Concord, MA
01742
978.371.7500
280 Elm Street
South Dartmouth, MA
02748
508.999.0440

PROJECT

MAIN LIFT PUMP STATION IMPROVEMENTS

TAUNTON, MA

TITLE

ABBREVIATIONS, SYMBOLS & MOUNTING HEIGHTS

REVISIONS

NO.	DESCRIPTION	DATE

DRAWN BY: TM
DESIGNED BY: DSK
CHECKED BY: MPS
DSK JOB No.: TPS-1795 DATE: 3/31/2022
BETA JOB No.: 5530

SCALE

As indicated

UNLESS OTHERWISE NOTED OR CHANGED BY REPRODUCTION

CONTRACT 2

SHEET NO.
A-02

P:\PROJECTS\1510 NPS - NEWBURYPORT PUMP STATION\600-NPS-DWGS\601-REVIT\FAMILIES\TITLEBLOCKS\KDG_Arch D 24x36 Vertical Title - BETA

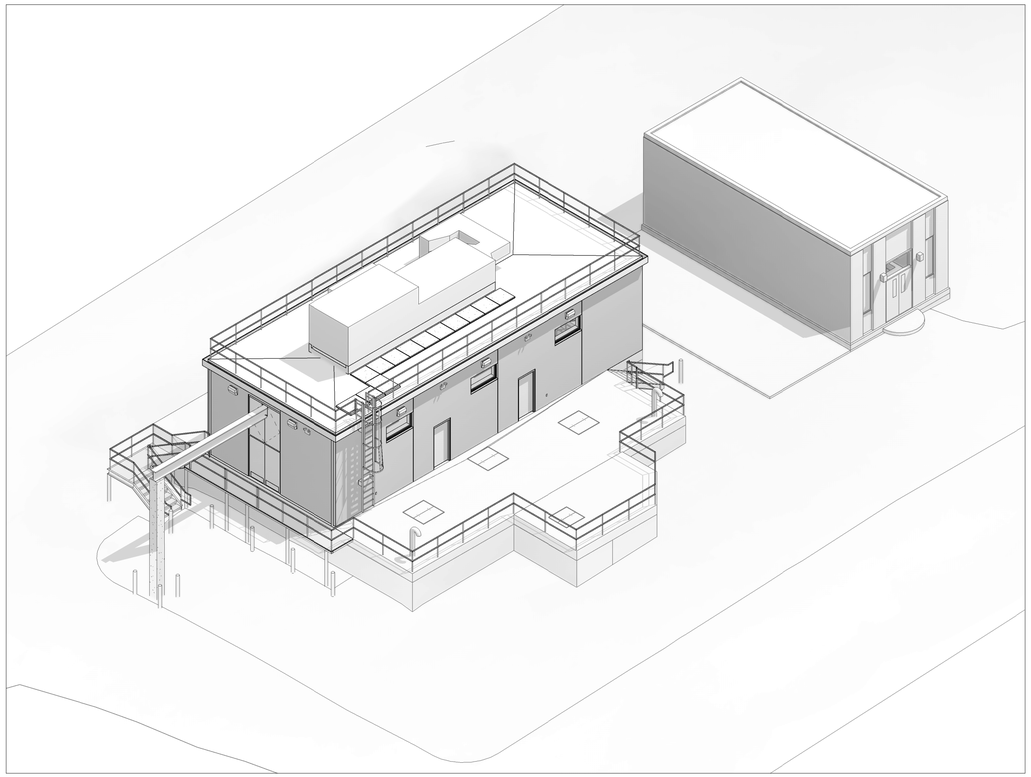

4 3D-SW-CORNER
NOT TO SCALE: FOR REFRENCE ONLY

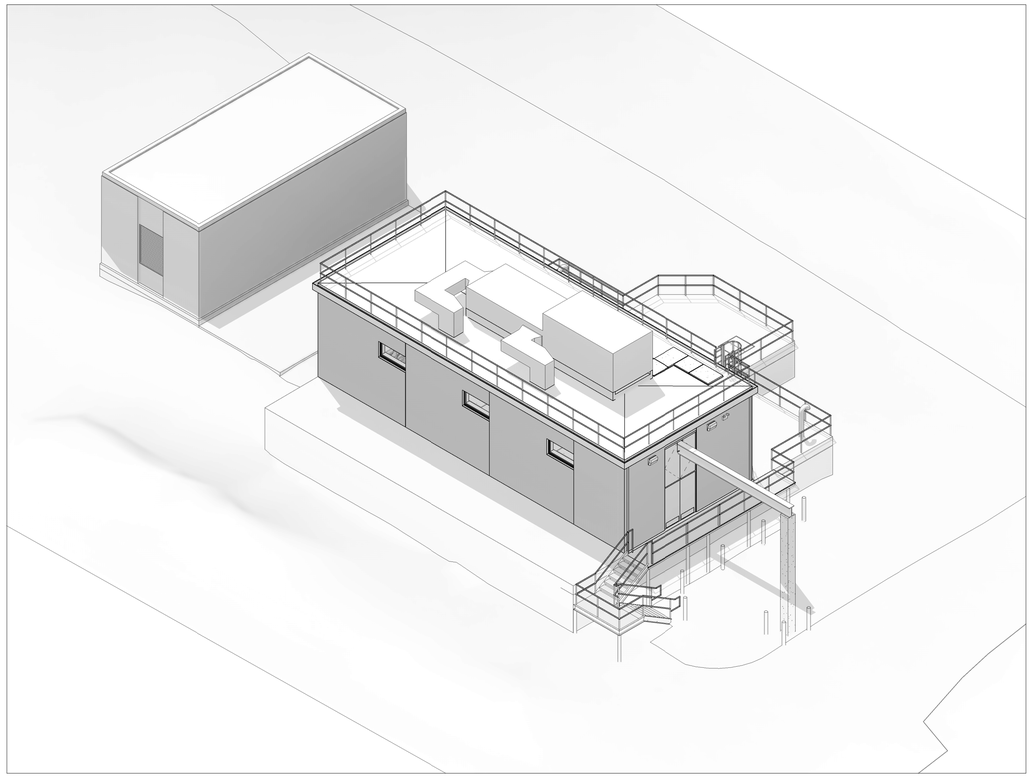

2 3D-NW-CORNER
NOT TO SCALE: FOR REFRENCE ONLY

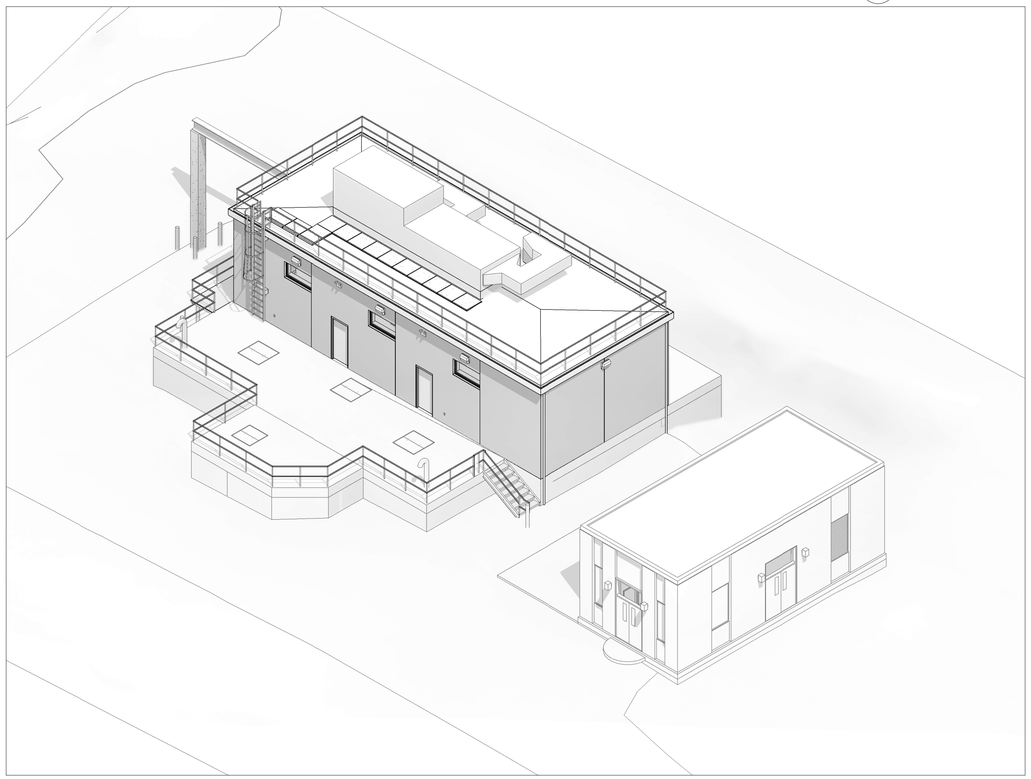

3 3D-SE-CORNER

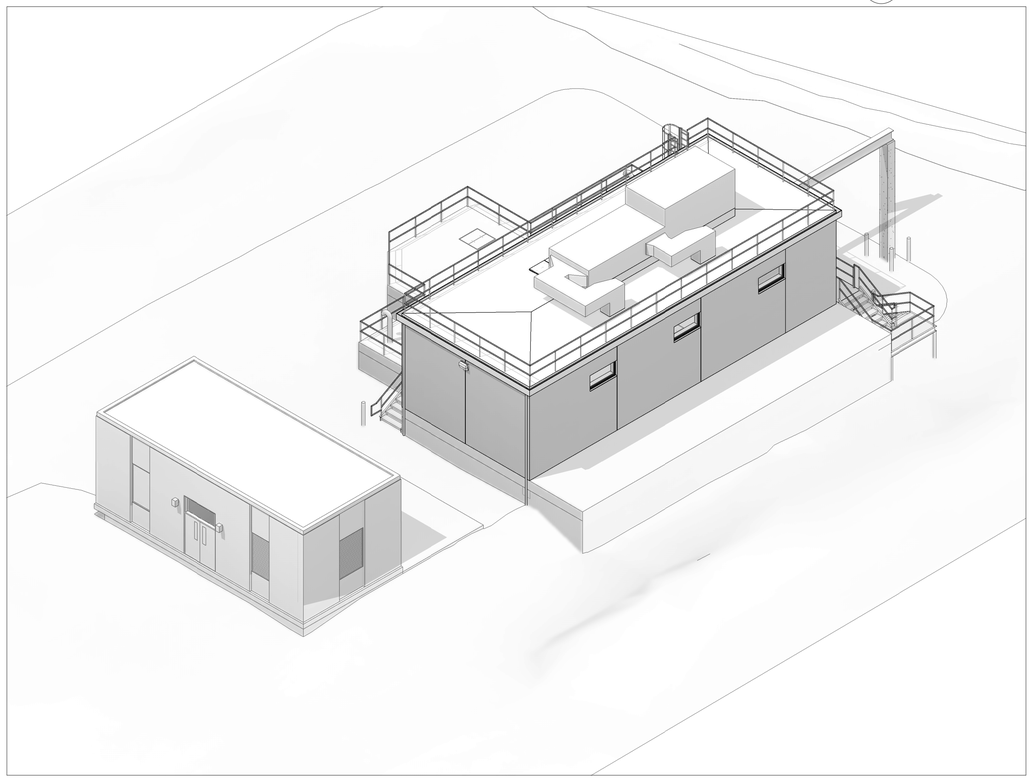

1 3D-NE-CORNER
NOT TO SCALE: FOR REFRENCE ONLY

PREPARED BY:

BETA
www.BETA-Inc.com
PLOT DATE: 8/29/2021 3:59:36 PM

REGISTERED PROFESSIONAL

THOMAS D. MCGRAW
No. 24938
REGISTERED ARCHITECT
BOSTON
MASS.
COMMONWEALTH OF MASSACHUSETTS

SUBCONSULTANT:

DSK Dewing Schmid Kearns
ARCHITECTS + PLANNERS

30 Monument Square
Suite 200B
Concord, MA
01742
978.371.7500

280 Elm Street
South Dartmouth, MA
02748
508.999.0440

PROJECT

MAIN LIFT PUMP STATION IMPROVEMENTS

TAUNTON, MA

TITLE

3D VIEWS

REVISIONS

NO.	DESCRIPTION	DATE

DRAWN BY: TM

DESIGNED BY: DSK

CHECKED BY: MPS

DSK JOB No.: TPS-1795 DATE: 3/31/2022

BETA JOB No.: 5530

SCALE

UNLESS OTHERWISE NOTED OR CHANGED BY REPRODUCTION

CONTRACT 2

SHEET NO.

A-03

P:\PROJECTS\1510 NPS - NEWBURYPORT PUMP STATION\600-NPS-DWGS\601-REV\TFAMILIES\TITLEBLOCKS\KDG_Arch D 24x36 Vertical Title - BETA

RENOVATION NOTES

NOTE	DESCRIPTION
1	REPLACE ALL EXISTING WINDOWS AND DOOR FRAMES AND UNITS W/ INSULATED, LAMINATED GLAZED UNITS OF SAME DIMENSIONS AND COLOR. SEE SPECS, TYP.
2	REPLACE ALL LOUVERS W/ NEW UNITS OF SAME DIMENSIONS AND FREE AREA. SEE SPECS, TYP.
3	POWER WASH BRICK AND SIDING. REPOINT AND REPLACE ANY DAMAGED OR MISSING MORTAR. COLOR TO MATCH EXISTING, TYP.
4	PROVIDE NEW LIGHTING AT DOORS TO MATCH EXISTING LOCATIONS (SEE ELECTRICAL LIGHTING SCHEDULE, TYP).
5	REMOVE AND REPLACE ROOF W/ SIMILAR SLOPE AND MATERIALS. ADD INSULATION TO ROOF ASSEMBLY PER CODE, TYP.
6	PROVIDE NEW INTERIOR PAINT ON EXISTING INTERIOR WALLS THAT CURRENTLY HAVE PAINT, SEE SPECS, TYP. VERIFY IN FIELD, TYP. PROPERLY PREPARE AND PRIME EXISTING SURFACES TO RECEIVE NEW PAINT, TYP.

EXISTING WINDOW AND LOUVER SCHEDULE

WINDOW NUMBER	WINDOW TYPE	LOCATION: ROOM NUMBER	LOCATION: ROOM NAME	WINDOW SIZE: WIDTH	WINDOW SIZE: HEIGHT	FRAME MATERIAL: EXT	FRAME MATERIAL: INT	GLAZING	FINISH: EXT	FINISH: INT	MATERIAL: LOUVER	SILL TYPE	HEAD TYPE	JAMB TYPE	NOTES
WINDOW															
EXIST. STATION															
EX-01		EX-102	EXISTING WC	2' - 0"	6' - 8"										
EX-02		EX-101	EXISTING PUMP STATION CONTROL ROOM	2' - 0"	6' - 8"										
EX-03		EX-101	EXISTING PUMP STATION CONTROL ROOM	3' - 10"	6' - 8"										
LOUVER															
EXIST. STATION															
EX-04		EX-101	EXISTING PUMP STATION CONTROL ROOM	3' - 10"	6' - 8"										
EX-05		EX-101	EXISTING PUMP STATION CONTROL ROOM	5' - 0"	6' - 8"										

EXISTING PUMP STATION - DOOR SCHEDULE

DOOR NUMBER	DOOR TYPE	LOCATION: ROOM NUMBER	LOCATION: ROOM NAME	LOCATION: INT/EXT	DOOR: PANEL SIZE: WIDTH	DOOR: PANEL SIZE: HEIGHT	DOOR: PANEL: THICKNESS	DOOR: PANEL: TOTAL PANEL COUNT	DOOR: MAT'L	DOOR: FINISH	DOOR: GLAZING TYPE	FRAME: FRAME TYPE	FRAME: THRESHOLD TYPE	FRAME: GASKET	FIRE RATING	HARDWARE	NOTES
EXIST. STATION																	
EX-D-01																	
EX-D-02																	
EX-D-03	FL			INT	2' - 8"	6' - 8"	0' - 1 3/4"	1	STEEL		N/A	B		Yes		HD-5	

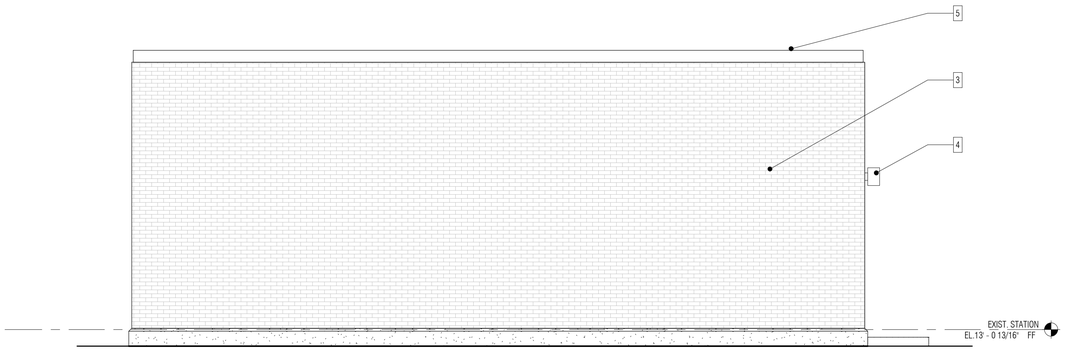

6 EXISTING PUMP STATION - WEST ELEVATION
1/4" = 1'-0"

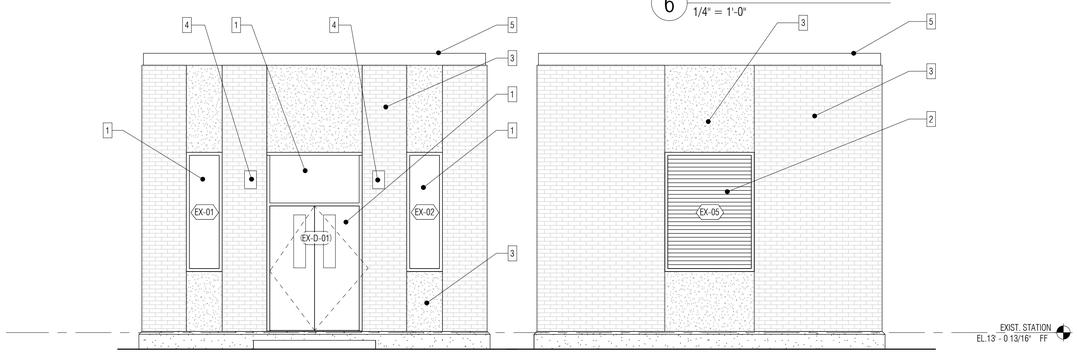

5 EXISTING PUMP STATION - SOUTH ELEVATION
1/4" = 1'-0"

4 EXISTING PUMP STATION - NORTH ELEVATION
1/4" = 1'-0"

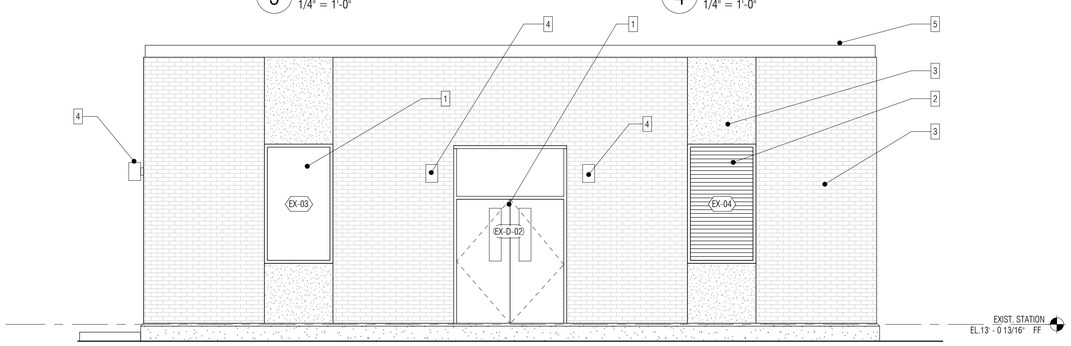

3 EXISTING PUMP STATION - EAST ELEVATION
1/4" = 1'-0"

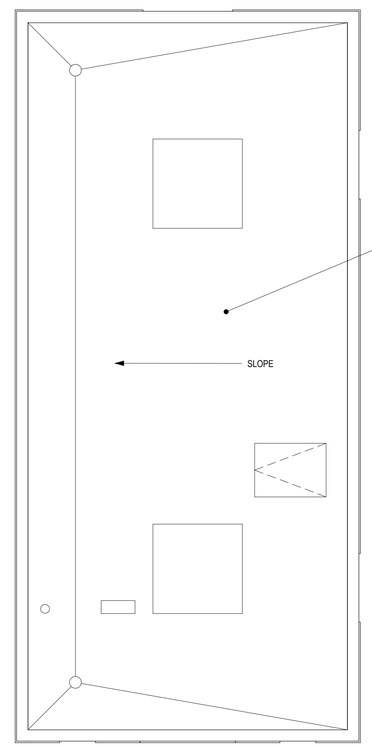

2 EXISTING PUMP STATION - ROOF PLAN
1/4" = 1'-0"

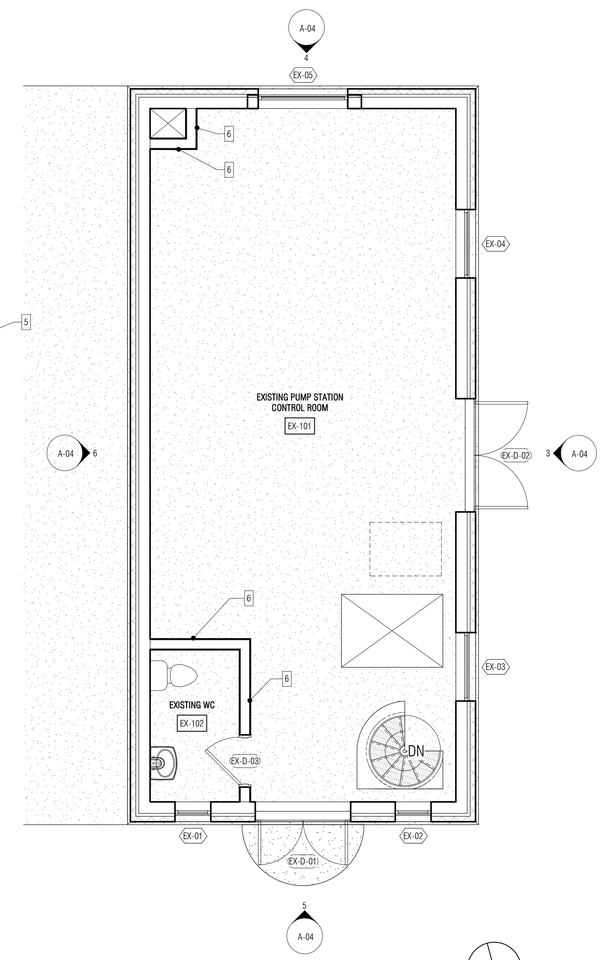

1 EXISTING PUMP STATION FLOOR PLAN
1/4" = 1'-0"

PREPARED BY:

BETA
www.BETA-Inc.com
PLOT DATE: 8/29/2021 3:59:39 PM

REGISTERED PROFESSIONAL

REGISTERED ARCHITECT THOMAS D. MCGRATH No. 6938 BOSTON MASS. COMMONWEALTH OF MASSACHUSETTS

SUBCONSULTANT:

DSK Dewing Schmid Kearns
ARCHITECTS + PLANNERS

30 Monument Square
Suite 200B
Concord, MA
01742
978.371.7500

280 Elm Street
South Dartmouth, MA
02748
508.999.0440

PROJECT

MAIN LIFT PUMP STATION IMPROVEMENTS

TAUNTON, MA

TITLE

EXISTING SEWAGE PUMP STATION DRAWINGS

REVISIONS

NO.	DESCRIPTION	DATE

DRAWN BY: TM

DESIGNED BY: DSK

CHECKED BY: MPS

DSK JOB No.: TPS-1795 DATE: 3/31/2022

BETA JOB No.: 5530

SCALE

1/4" = 1'-0"

UNLESS OTHERWISE NOTED OR CHANGED BY REPRODUCTION

CONTRACT 2

SHEET NO.

A-04

P:\PROJECTS\1510 NPS - NEWBURYPORT PUMP STATION\600-NPS-DWGS\601-REV\TTFAMILIES\TITLEBLOCKS\KDG_Arch D 24x36 Vertical Title - BETA

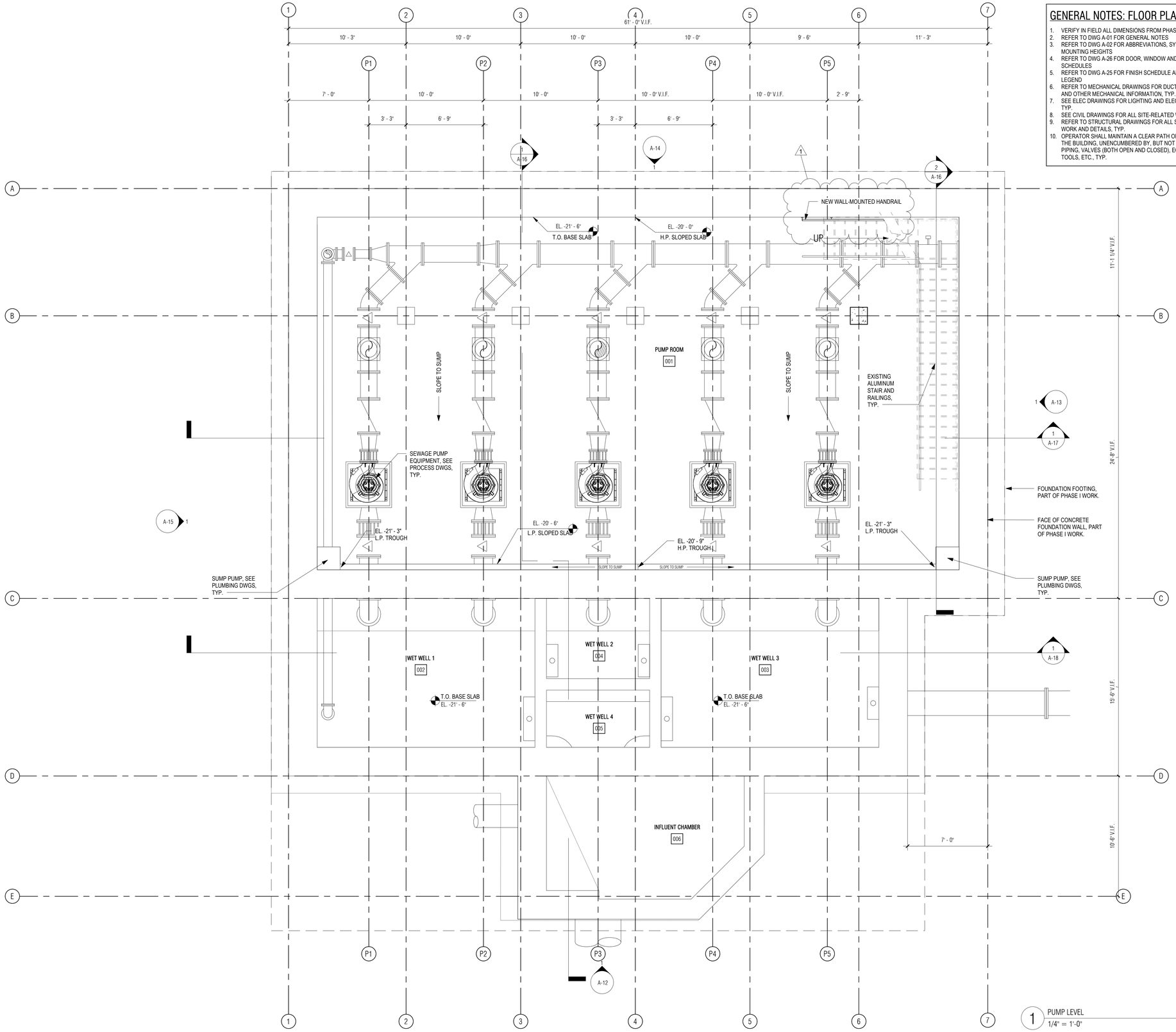

1 PUMP LEVEL
1/4" = 1'-0"

GENERAL NOTES: FLOOR PLANS

1. VERIFY IN FIELD ALL DIMENSIONS FROM PHASE I WORK.
2. REFER TO DWG A-01 FOR GENERAL NOTES
3. REFER TO DWG A-02 FOR ABBREVIATIONS, SYMBOLS & MOUNTING HEIGHTS
4. REFER TO DWG A-26 FOR DOOR, WINDOW AND LOUVER SCHEDULES
5. REFER TO DWG A-25 FOR FINISH SCHEDULE AND MATERIALS LEGEND
6. REFER TO MECHANICAL DRAWINGS FOR DUCTING LAYOUTS AND OTHER MECHANICAL INFORMATION, TYP.
7. SEE ELEC DRAWINGS FOR LIGHTING AND ELEC INFORMATION, TYP.
8. SEE CIVIL DRAWINGS FOR ALL SITE-RELATED WORK, TYP.
9. REFER TO STRUCTURAL DRAWINGS FOR ALL STRUCTURAL WORK AND DETAILS, TYP.
10. OPERATOR SHALL MAINTAIN A CLEAR PATH OF TRAVEL WITHIN THE BUILDING, UNENCUMBERED BY, BUT NOT LIMITED TO PIPING, VALVES (BOTH OPEN AND CLOSED), EQUIPMENT, TOOLS, ETC., TYP.

PREPARED BY:

BETA
www.BETA-Inc.com
PLOT DATE: 8/29/2021 3:59:41 PM

REGISTERED PROFESSIONAL

REGISTERED ARCHITECT
THOMAS D. MCGRATH
No. 23938
BOSTON
MASS
COMMONWEALTH OF MASSACHUSETTS

SUBCONSULTANT:

DSK Dewing Schmid Kearns
ARCHITECTS + PLANNERS

30 Monument Square
Suite 200B
Concord, MA
01742
978.371.7500

280 Elm Street
South Dartmouth, MA
02748
508.999.0440

PROJECT

MAIN LIFT PUMP STATION IMPROVEMENTS

TAUNTON, MA

TITLE

PUMP ROOM LEVEL PLAN

REVISIONS

NO.	DESCRIPTION	DATE
1	08/30/2021	Railing

DRAWN BY:	TM
DESIGNED BY:	DSK
CHECKED BY:	MPS
DSK JOB No.: TPS-1795	DATE: 3/31/2022
BETA JOB No.:	5530

SCALE

As indicated

UNLESS OTHERWISE NOTED OR CHANGED BY REPRODUCTION

CONTRACT 2

SHEET NO.

A-05

P:\PROJECTS\1510 NPS - NEWBURYPORT PUMP STATION\600-NPS-DWGS\601-REV\TFAMILIES\TITLEBLOCKS\KDG_Arch D 24x36 Vertical Title - BETA

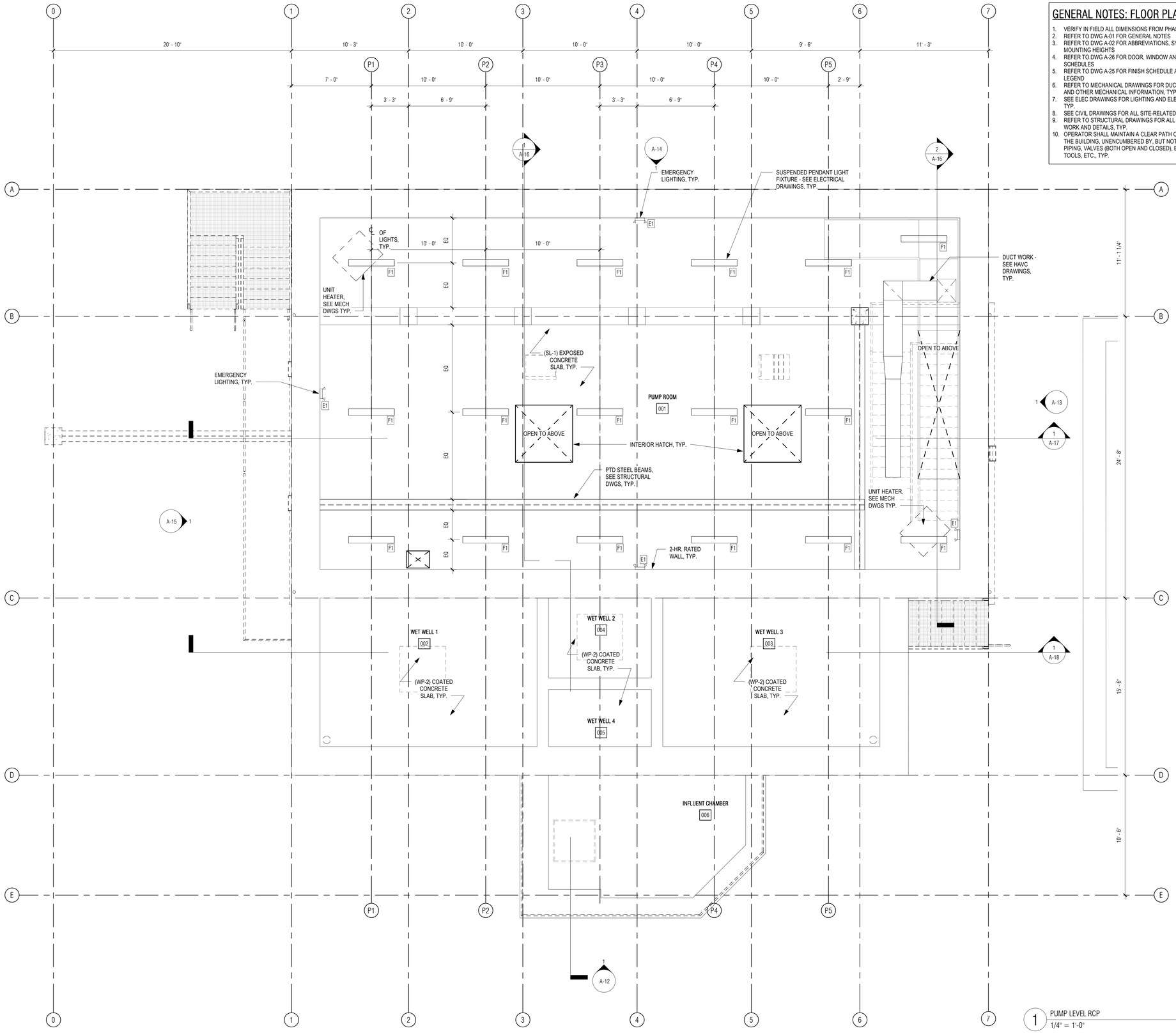

GENERAL NOTES: FLOOR PLANS

1. VERIFY IN FIELD ALL DIMENSIONS FROM PHASE I WORK.
2. REFER TO DWG A-01 FOR GENERAL NOTES
3. REFER TO DWG A-02 FOR ABBREVIATIONS, SYMBOLS & MOUNTING HEIGHTS
4. REFER TO DWG A-26 FOR DOOR, WINDOW AND LOUVER SCHEDULES
5. REFER TO DWG A-25 FOR FINISH SCHEDULE AND MATERIALS LEGEND
6. REFER TO MECHANICAL DRAWINGS FOR DUCTING LAYOUTS AND OTHER MECHANICAL INFORMATION, TYP.
7. SEE ELEC DRAWINGS FOR LIGHTING AND ELEC INFORMATION, TYP.
8. SEE CIVIL DRAWINGS FOR ALL SITE-RELATED WORK, TYP.
9. REFER TO STRUCTURAL DRAWINGS FOR ALL STRUCTURAL WORK AND DETAILS, TYP.
10. OPERATOR SHALL MAINTAIN A CLEAR PATH OF TRAVEL WITHIN THE BUILDING, UNENCUMBERED BY, BUT NOT LIMITED TO PIPING, VALVES (BOTH OPEN AND CLOSED), EQUIPMENT, TOOLS, ETC., TYP.

1 PUMP LEVEL RCP
1/4" = 1'-0"

N

PREPARED BY:

BETA
www.BETA-Inc.com
PLOT DATE: 8/29/2021 3:59:42 PM

REGISTERED PROFESSIONAL

REGISTERED ARCHITECT
THOMAS D. MCGRATH
No. 6938
BOSTON
MASS
COMMONWEALTH OF MASSACHUSETTS

SUBCONSULTANT:

DSK Dewing Schmid Kearns
ARCHITECTS + PLANNERS

30 Monument Square
Suite 200B
Concord, MA
01742
978.371.7500

280 Elm Street
South Dartmouth, MA
02748
508.999.0440

PROJECT

MAIN LIFT PUMP STATION IMPROVEMENTS

TAUNTON, MA

TITLE

PUMP ROOM LEVEL RCP

REVISIONS

NO.	DESCRIPTION	DATE

DRAWN BY:	TM
DESIGNED BY:	DSK
CHECKED BY:	MPS
DSK JOB No.: TPS-1795	DATE: 3/31/2022
BETA JOB No.:	5530

SCALE

As indicated

UNLESS OTHERWISE NOTED OR CHANGED BY REPRODUCTION

CONTRACT 2

SHEET NO.

A-06

P:\PROJECTS\1510 NPS - NEWBURYPORT PUMP STATION\600-NPS-DWGS\601-REV\TTFAMILIES\TITLEBLOCKS\KDG_Arch D 24x36 Vertical Title - BETA

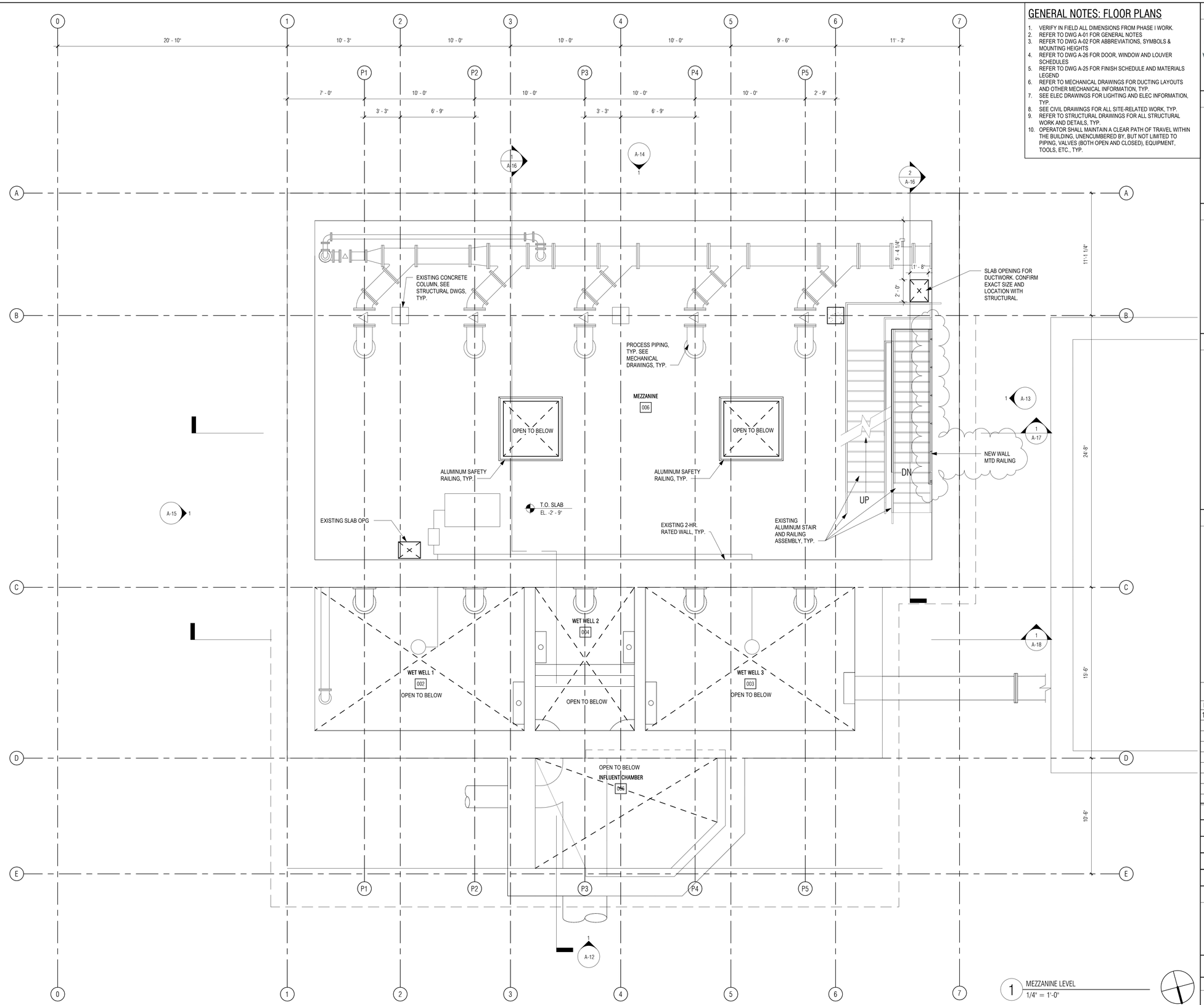

1 MEZZANINE LEVEL
1/4" = 1'-0"

GENERAL NOTES: FLOOR PLANS

1. VERIFY IN FIELD ALL DIMENSIONS FROM PHASE I WORK.
2. REFER TO DWG A-01 FOR GENERAL NOTES
3. REFER TO DWG A-02 FOR ABBREVIATIONS, SYMBOLS & MOUNTING HEIGHTS
4. REFER TO DWG A-26 FOR DOOR, WINDOW AND LOUVER SCHEDULES
5. REFER TO DWG A-25 FOR FINISH SCHEDULE AND MATERIALS LEGEND
6. REFER TO MECHANICAL DRAWINGS FOR DUCTING LAYOUTS AND OTHER MECHANICAL INFORMATION, TYP.
7. SEE ELEC DRAWINGS FOR LIGHTING AND ELEC INFORMATION, TYP.
8. SEE CIVIL DRAWINGS FOR ALL SITE-RELATED WORK, TYP.
9. REFER TO STRUCTURAL DRAWINGS FOR ALL STRUCTURAL WORK AND DETAILS, TYP.
10. OPERATOR SHALL MAINTAIN A CLEAR PATH OF TRAVEL WITHIN THE BUILDING, UNENCUMBERED BY, BUT NOT LIMITED TO PIPING, VALVES (BOTH OPEN AND CLOSED), EQUIPMENT, TOOLS, ETC., TYP.

PREPARED BY:

BETA
www.BETA-Inc.com
PLOT DATE: 8/29/2021 4:13:33 PM

REGISTERED PROFESSIONAL

REGISTERED ARCHITECT
THOMAS D. MCKEARNS
No. 6938
BOSTON
MASS
COMMONWEALTH OF MASSACHUSETTS

SUBCONSULTANT:

DSK Dewing Schmid Kearns
ARCHITECTS + PLANNERS

30 Monument Square
Suite 200B
Concord, MA
01742
978.371.7500

280 Elm Street
South Dartmouth, MA
02748
508.999.0440

PROJECT

MAIN LIFT PUMP STATION IMPROVEMENTS

TAUNTON, MA

TITLE

PUMP ROOM MEZZANINE LEVEL PLAN

REVISIONS

NO.	DESCRIPTION	DATE
1	08/30/2021	Railing

DRAWN BY:	TM
DESIGNED BY:	DSK
CHECKED BY:	MPS
DSK JOB No.: TPS-1795	DATE: 3/31/2022
BETA JOB No.:	5530

SCALE

As indicated

UNLESS OTHERWISE NOTED OR CHANGED BY REPRODUCTION

CONTRACT 2

SHEET NO.

A-07

P:\PROJECTS\1510 NPS - NEWBURYPORT PUMP STATION\600-NPS-DWGS\601-REV\TTFAMILIES\TITLEBLOCKS\KDG_Arch D 24x36 Vertical Title - BETA

GENERAL NOTES: FLOOR PLANS

1. VERIFY IN FIELD ALL DIMENSIONS FROM PHASE I WORK.
2. REFER TO DWG A-01 FOR GENERAL NOTES
3. REFER TO DWG A-02 FOR ABBREVIATIONS, SYMBOLS & MOUNTING HEIGHTS
4. REFER TO DWG A-26 FOR DOOR, WINDOW AND LOUVER SCHEDULES
5. REFER TO DWG A-25 FOR FINISH SCHEDULE AND MATERIALS LEGEND
6. REFER TO MECHANICAL DRAWINGS FOR DUCTING LAYOUTS AND OTHER MECHANICAL INFORMATION, TYP.
7. SEE ELEC DRAWINGS FOR LIGHTING AND ELEC INFORMATION, TYP.
8. SEE CIVIL DRAWINGS FOR ALL SITE-RELATED WORK, TYP.
9. REFER TO STRUCTURAL DRAWINGS FOR ALL STRUCTURAL WORK AND DETAILS, TYP.
10. OPERATOR SHALL MAINTAIN A CLEAR PATH OF TRAVEL WITHIN THE BUILDING, UNENCUMBERED BY, BUT NOT LIMITED TO PIPING, VALVES (BOTH OPEN AND CLOSED), EQUIPMENT, TOOLS, ETC., TYP.

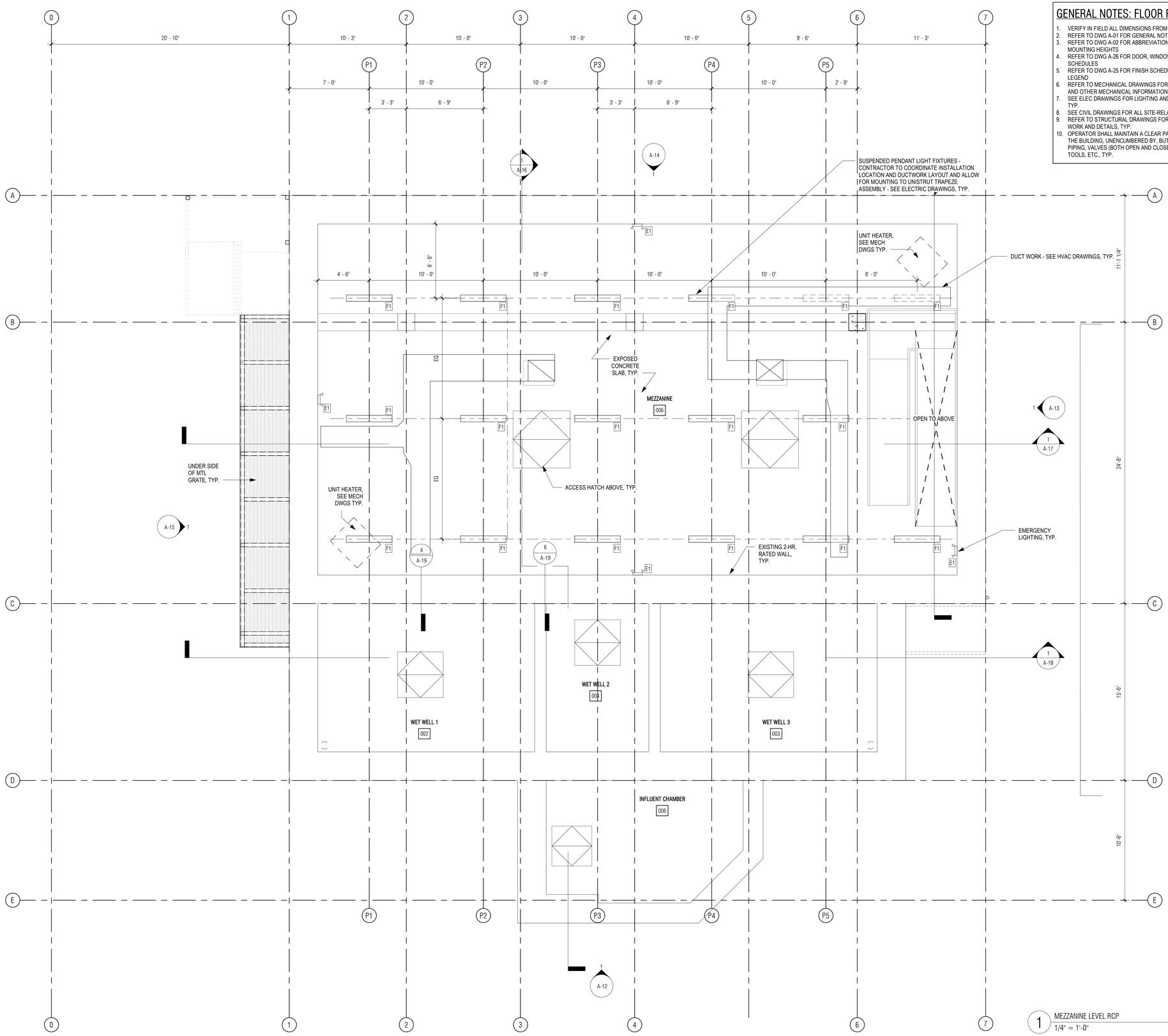

1 MEZZANINE LEVEL RCP
1/4" = 1'-0"

PREPARED BY:

BETA
www.BETA-Inc.com
PLOT DATE: 8/29/2021 3:59:45 PM

REGISTERED PROFESSIONAL

REGISTERED ARCHITECT THOMAS D. MCGRATH 6336 BOSTON MASS. COMMONWEALTH OF MASSACHUSETTS

SUBCONSULTANT:

DSK Dewing Schmid Kearns
ARCHITECTS + PLANNERS

30 Monument Square
Suite 200B
Concord, MA
01742
978.371.7500

280 Elm Street
South Dartmouth, MA
02748
508.999.0440

PROJECT

MAIN LIFT PUMP STATION IMPROVEMENTS

TAUNTON, MA

TITLE

PUMP ROOM MEZZANINE LEVEL REFLECTED CEILING PLAN

REVISIONS

NO.	DESCRIPTION	DATE

DRAWN BY: TM
DESIGNED BY: DSK
CHECKED BY: MPS
DSK JOB No.: TPS-1795 DATE: 3/31/2022
BETA JOB No.: 5530

SCALE

As indicated

UNLESS OTHERWISE NOTED OR CHANGED BY REPRODUCTION

CONTRACT 2

SHEET NO.

A-08

P:\PROJECTS\1510 NPS - NEWBURYPORT PUMP STATION\600-NPS-DWGS\601-REV\TTFAMILIES\TITLEBLOCKS\KDG_Arch D 24x36 Vertical Title - BETA

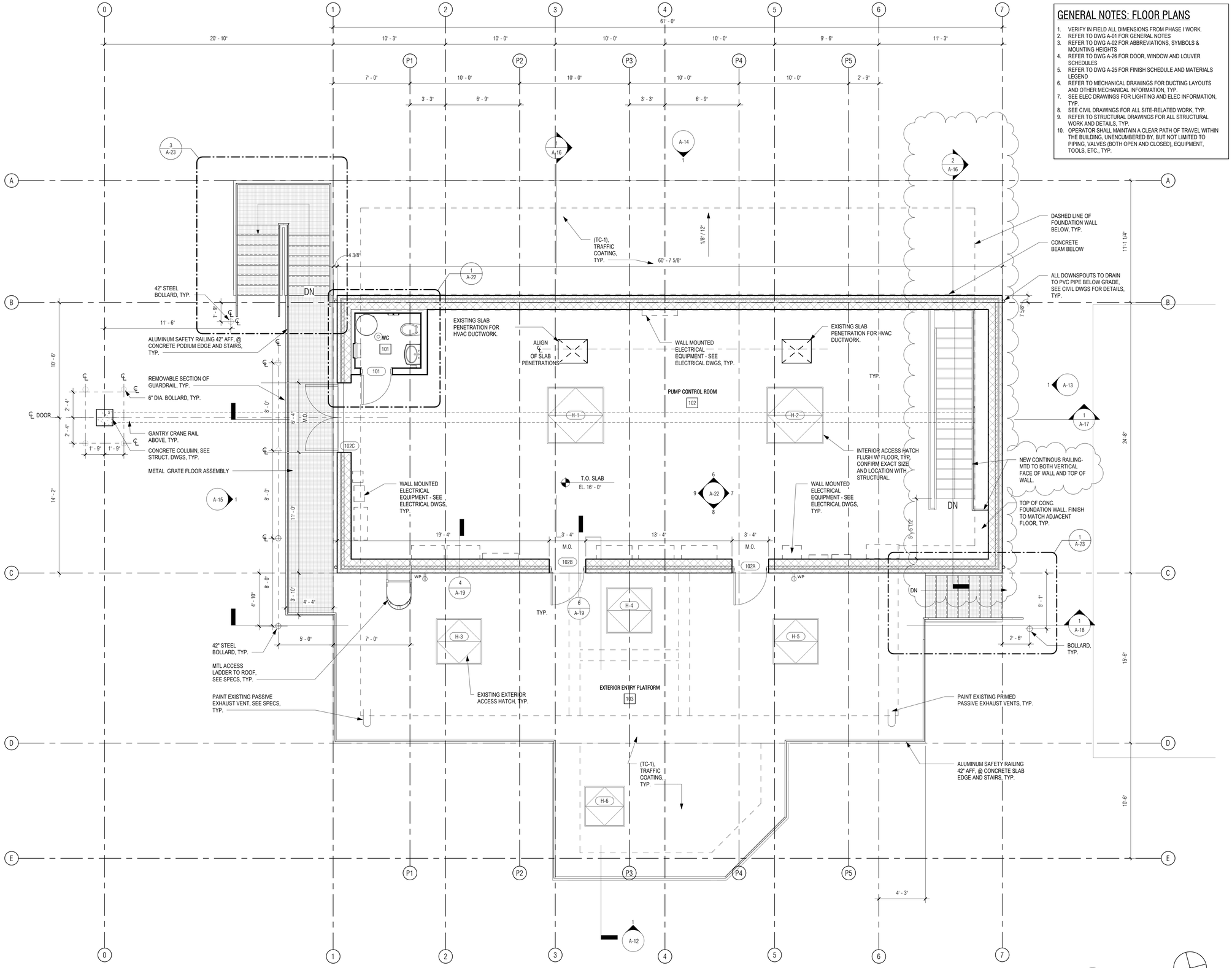

GENERAL NOTES: FLOOR PLANS

1. VERIFY IN FIELD ALL DIMENSIONS FROM PHASE I WORK.
2. REFER TO DWG A-01 FOR GENERAL NOTES
3. REFER TO DWG A-02 FOR ABBREVIATIONS, SYMBOLS & MOUNTING HEIGHTS
4. REFER TO DWG A-26 FOR DOOR, WINDOW AND LOUVER SCHEDULES
5. REFER TO DWG A-25 FOR FINISH SCHEDULE AND MATERIALS LEGEND
6. REFER TO MECHANICAL DRAWINGS FOR DUCTING LAYOUTS AND OTHER MECHANICAL INFORMATION, TYP.
7. SEE ELEC DRAWINGS FOR LIGHTING AND ELEC INFORMATION, TYP.
8. SEE CIVIL DRAWINGS FOR ALL SITE-RELATED WORK, TYP.
9. REFER TO STRUCTURAL DRAWINGS FOR ALL STRUCTURAL WORK AND DETAILS, TYP.
10. OPERATOR SHALL MAINTAIN A CLEAR PATH OF TRAVEL WITHIN THE BUILDING, UNENCUMBERED BY, BUT NOT LIMITED TO PIPING, VALVES (BOTH OPEN AND CLOSED), EQUIPMENT, TOOLS, ETC., TYP.

1 GROUND FLOOR
1/4" = 1'-0"

PREPARED BY:

BETA
www.BETA-Inc.com
PLOT DATE: 8/30/2021 6:22:44 AM

REGISTERED PROFESSIONAL

REGISTERED ARCHITECT THOMAS D. MCGRATH No. 6938 BOSTON MASS COMMONWEALTH OF MASSACHUSETTS

SUBCONSULTANT:

DSK Dewing Schmid Kearns
ARCHITECTS + PLANNERS

30 Monument Square
Suite 200B
Concord, MA
01742
978.371.7500

280 Elm Street
South Dartmouth, MA
02748
508.999.0440

PROJECT

MAIN LIFT PUMP STATION IMPROVEMENTS

TAUNTON, MA

TITLE

GROUND FLOOR PLAN

REVISIONS

NO.	DESCRIPTION	DATE
1	08/30/2021	Railing

DRAWN BY:	TM
DESIGNED BY:	DSK
CHECKED BY:	MPS
DSK JOB No.: TPS-1795	DATE: 3/31/2022
BETA JOB No.:	5530

SCALE

As indicated

UNLESS OTHERWISE NOTED OR CHANGED BY REPRODUCTION

CONTRACT 2

SHEET NO.

A-09

P:\PROJECTS\1510 NPS - NEWBURYPORT PUMP STATION\600-NPS-DWGS\601-REV\TFAMILIES\TITLEBLOCKS\KDG_Arch D 24x36 Vertical Title - BETA

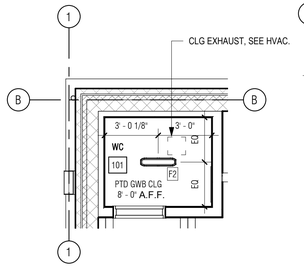

2 RESTROOM RCP
1/4" = 1'-0"

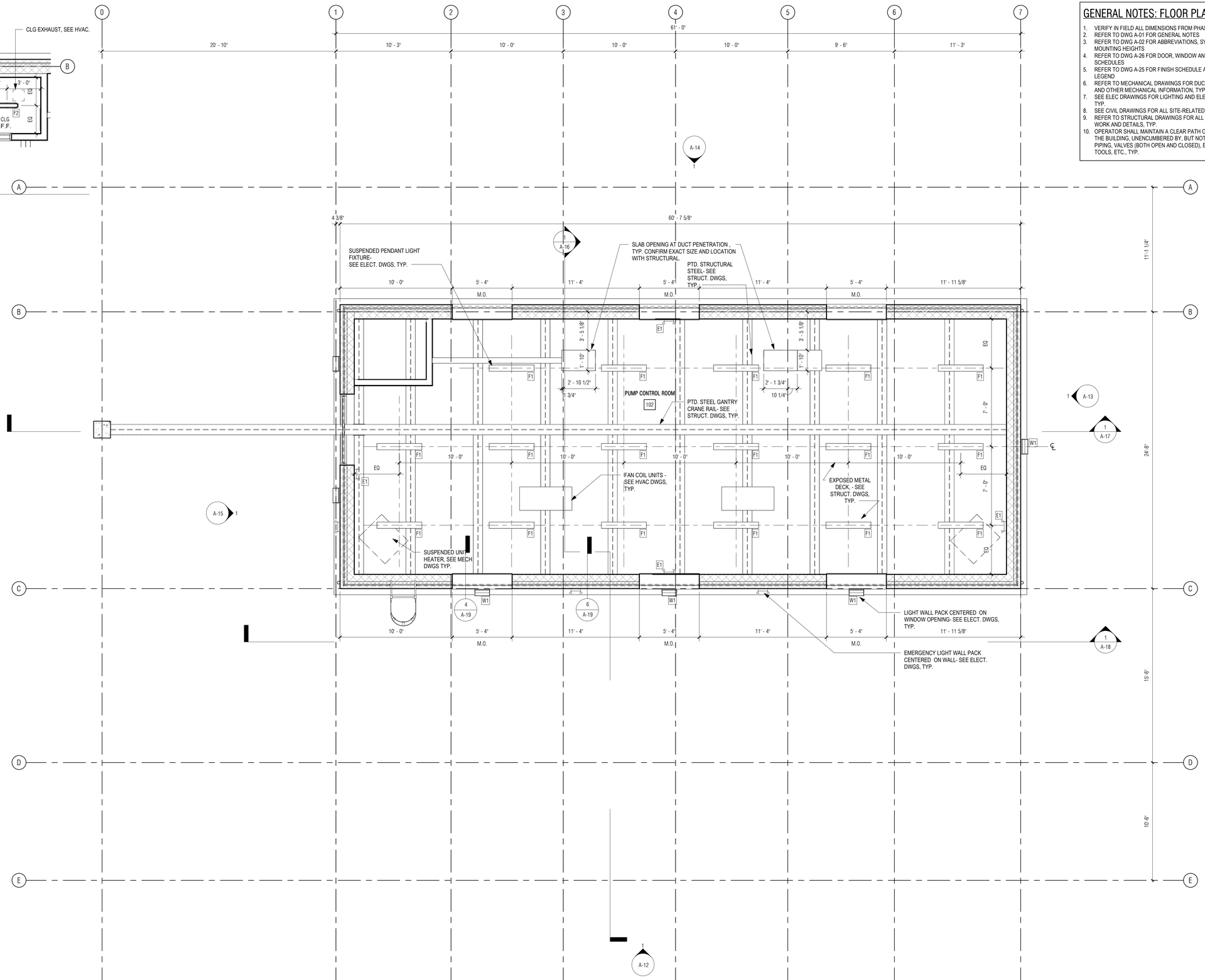

1 GROUND FLOOR RCP
1/4" = 1'-0"

GENERAL NOTES: FLOOR PLANS

1. VERIFY IN FIELD ALL DIMENSIONS FROM PHASE I WORK.
2. REFER TO DWG A-01 FOR GENERAL NOTES
3. REFER TO DWG A-02 FOR ABBREVIATIONS, SYMBOLS & MOUNTING HEIGHTS
4. REFER TO DWG A-26 FOR DOOR, WINDOW AND LOUVER SCHEDULES
5. REFER TO DWG A-25 FOR FINISH SCHEDULE AND MATERIALS LEGEND
6. REFER TO MECHANICAL DRAWINGS FOR DUCTING LAYOUTS AND OTHER MECHANICAL INFORMATION, TYP.
7. SEE ELEC DRAWINGS FOR LIGHTING AND ELEC INFORMATION, TYP.
8. SEE CIVIL DRAWINGS FOR ALL SITE-RELATED WORK, TYP.
9. REFER TO STRUCTURAL DRAWINGS FOR ALL STRUCTURAL WORK AND DETAILS, TYP.
10. OPERATOR SHALL MAINTAIN A CLEAR PATH OF TRAVEL WITHIN THE BUILDING, UNENCUMBERED BY, BUT NOT LIMITED TO PIPING, VALVES (BOTH OPEN AND CLOSED), EQUIPMENT, TOOLS, ETC., TYP.

PREPARED BY:

BETA
www.BETA-Inc.com
PLOT DATE: 8/29/2021 3:59:48 PM

REGISTERED PROFESSIONAL

REGISTERED ARCHITECT THOMAS D. MAGUIRE JR. No. 6938 BOSTON MASS. COMMONWEALTH OF MASSACHUSETTS

SUBCONSULTANT:

DSK Dewing Schmid Kearns
ARCHITECTS + PLANNERS

30 Monument Square
Suite 200B
Concord, MA
01742
978.371.7500

280 Elm Street
South Dartmouth, MA
02748
508.999.0440

PROJECT

MAIN LIFT PUMP STATION IMPROVEMENTS

TAUNTON, MA

TITLE

GROUND FLOOR AND WC REFLECTED CEILING PLANS

REVISIONS

NO.	DESCRIPTION	DATE

DRAWN BY:	TM
DESIGNED BY:	DSK
CHECKED BY:	MPS
DSK JOB No.: TPS-1795	DATE: 3/31/2022
BETA JOB No.:	5530

SCALE

As indicated

UNLESS OTHERWISE NOTED OR CHANGED BY REPRODUCTION

CONTRACT 2

SHEET NO.

A-10

P:\PROJECTS\1510 NPS - NEWBURYPORT PUMP STATION\600-NPS-DWGS\601-REV\TFAMILIES\TITLEBLOCKS\KDG_Arch D 24x36 Vertical Title - BETA

GENERAL NOTES: FLOOR PLANS

1. VERIFY IN FIELD ALL DIMENSIONS FROM PHASE I WORK.
2. REFER TO DWG A-01 FOR GENERAL NOTES
3. REFER TO DWG A-02 FOR ABBREVIATIONS, SYMBOLS & MOUNTING HEIGHTS
4. REFER TO DWG A-26 FOR DOOR, WINDOW AND LOUVER SCHEDULES
5. REFER TO DWG A-25 FOR FINISH SCHEDULE AND MATERIALS LEGEND
6. REFER TO MECHANICAL DRAWINGS FOR DUCTING LAYOUTS AND OTHER MECHANICAL INFORMATION, TYP.
7. SEE ELEC DRAWINGS FOR LIGHTING AND ELEC INFORMATION, TYP.
8. SEE CIVIL DRAWINGS FOR ALL SITE-RELATED WORK, TYP.
9. REFER TO STRUCTURAL DRAWINGS FOR ALL STRUCTURAL WORK AND DETAILS, TYP.
10. OPERATOR SHALL MAINTAIN A CLEAR PATH OF TRAVEL WITHIN THE BUILDING, UNENCUMBERED BY, BUT NOT LIMITED TO PIPING, VALVES (BOTH OPEN AND CLOSED), EQUIPMENT, TOOLS, ETC., TYP.

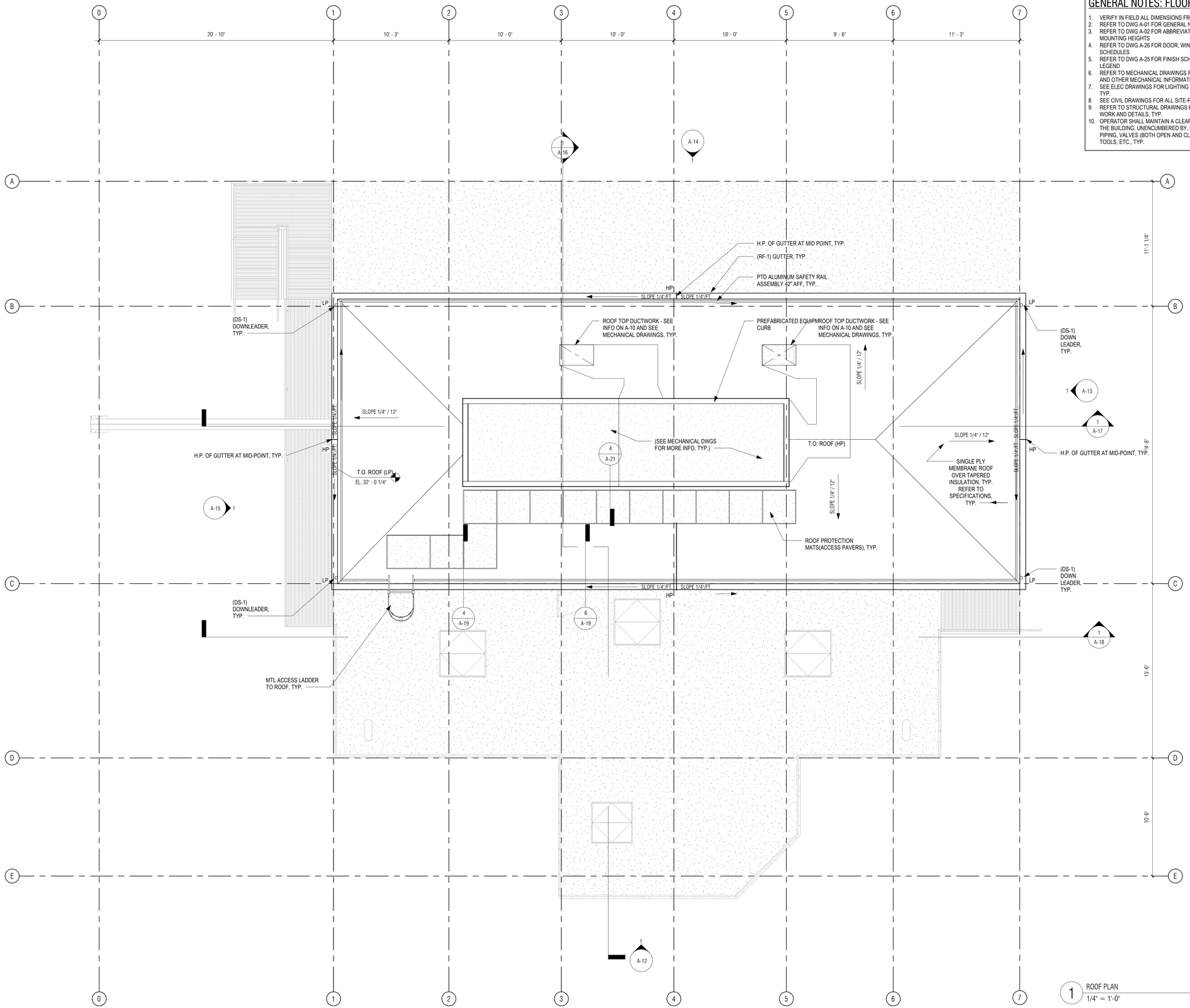

1 ROOF PLAN
1/4" = 1'-0"

N

PREPARED BY:

BETA
www.BETA-Inc.com
PLOT DATE: 8/29/2021 3:59:49 PM

REGISTERED PROFESSIONAL

REGISTERED ARCHITECT THOMAS D. MAYNARD No. 6938 BOSTON MASS. COMMONWEALTH OF MASSACHUSETTS

SUBCONSULTANT:

DSK Dewing Schmid Kearns
ARCHITECTS + PLANNERS

30 Monument Square
Suite 200B
Concord, MA
01742
978.371.7500

280 Elm Street
South Dartmouth, MA
02748
508.999.0440

PROJECT

MAIN LIFT PUMP STATION IMPROVEMENTS

TAUNTON, MA

TITLE

ROOF PLAN

REVISIONS

NO.	DESCRIPTION	DATE

DRAWN BY:	TM
DESIGNED BY:	DSK
CHECKED BY:	MPS
DSK JOB No.: TPS-1795	DATE: 3/31/2022
BETA JOB No.:	5530

SCALE

As indicated

UNLESS OTHERWISE NOTED OR CHANGED BY REPRODUCTION

CONTRACT 2

SHEET NO.

A-11

P:\PROJECTS\1510 NPS - NEWBURYPORT PUMP STATION\600-NPS-DWGS\601-REV\TTFAMILIES\TITLEBLOCKS\KDG_Arch D 24x36 Vertical Title - BETA

GENERAL NOTES: EXTERIOR ELEVATIONS

1. REFER TO DWG A-1 FOR GENERAL NOTES
2. REFER TO DWG A-2 FOR ABBREVIATIONS, SYMBOLS & MOUNTING HEIGHTS
3. REFER TO DWG A-12 FOR TYPICAL ANNOTATIONS
4. REFER TO DWG A-25 FOR DOOR, WINDOW AND LOUVER SCHEDULES
5. REFER TO DWG A-26 FOR FINISH SCHEDULE AND MATERIALS
6. REFER TO CIVIL DRAWINGS FOR FINISH GRADES, TYP.

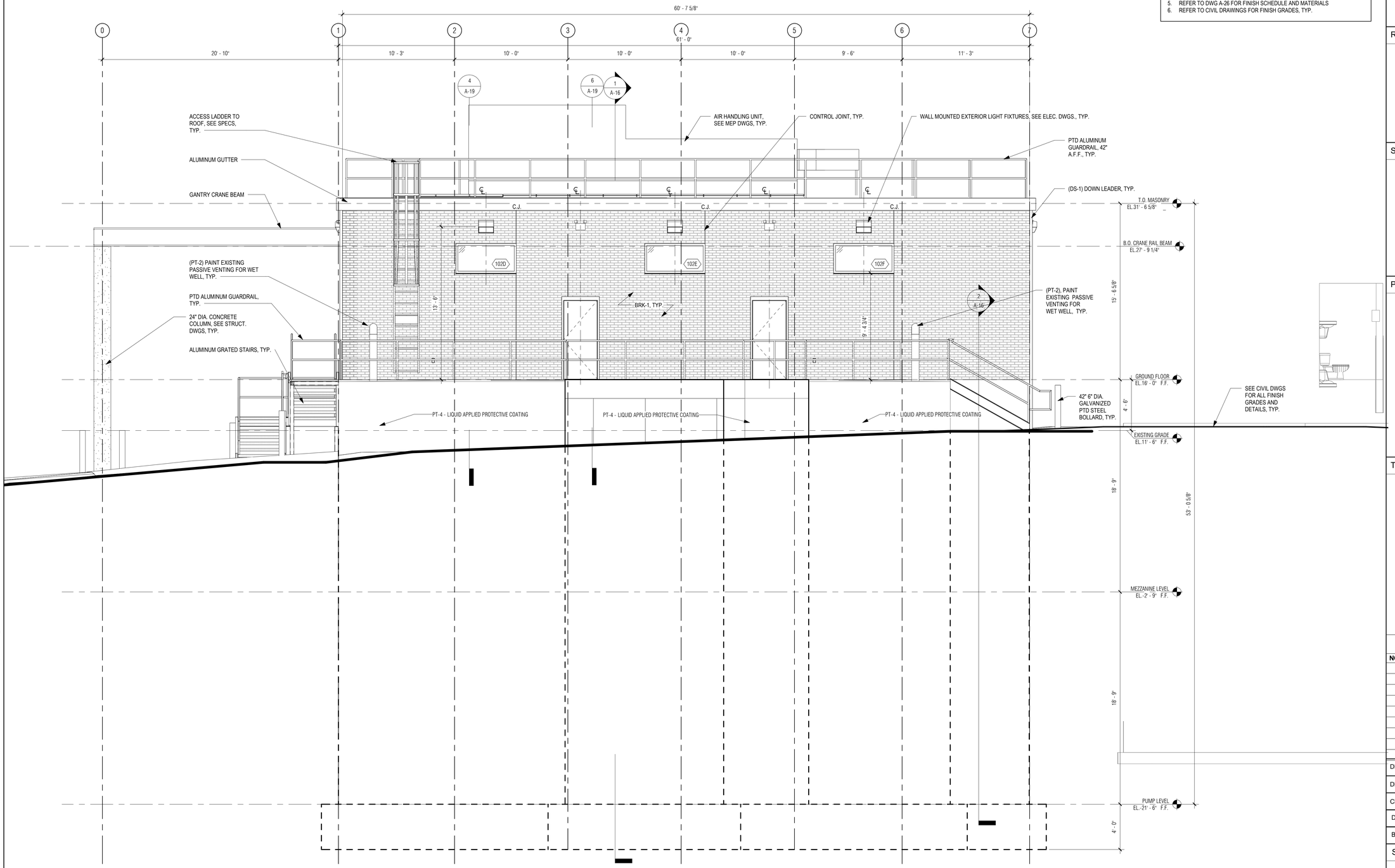

1 NORTH ELEVATION
1/4" = 1'-0"

PREPARED BY:

BETA
www.BETA-Inc.com
PLOT DATE: 8/29/2021 3:59:51 PM

REGISTERED PROFESSIONAL

REGISTERED ARCHITECT THOMAS D. MEARS No. 6938 BOSTON MASS. COMMONWEALTH OF MASSACHUSETTS

SUBCONSULTANT:

DSK Dewing Schmid Kearns
ARCHITECTS + PLANNERS

30 Monument Square
Suite 200B
Concord, MA
01742
978.371.7500

280 Elm Street
South Dartmouth, MA
02748
508.999.0440

PROJECT

MAIN LIFT PUMP STATION IMPROVEMENTS

TAUNTON, MA

TITLE

NORTH EXTERIOR ELEVATION

REVISIONS

NO.	DESCRIPTION	DATE

DRAWN BY: TM
DESIGNED BY: DSK
CHECKED BY: MPS
DSK JOB No.: TPS-1795 DATE: 3/31/2022
BETA JOB No.: 5530

SCALE

As indicated

UNLESS OTHERWISE NOTED OR CHANGED BY REPRODUCTION

CONTRACT 2

SHEET NO.

A-12

P:\PROJECTS\1510 NPS - NEWBURYPORT PUMP STATION\600-NPS-DWGS\601-REV\TF\FAMILIES\TITLEBLOCKS\KDG_Arch D 24x36 Vertical Title - BETA

GENERAL NOTES: EXTERIOR ELEVATIONS

1. REFER TO DWG A-1 FOR GENERAL NOTES
2. REFER TO DWG A-2 FOR ABBREVIATIONS, SYMBOLS & MOUNTING HEIGHTS
3. REFER TO DWG A-12 FOR TYPICAL ANNOTATIONS
4. REFER TO DWG A-25 FOR DOOR, WINDOW AND LOUVER SCHEDULES
5. REFER TO DWG A-26 FOR FINISH SCHEDULE AND MATERIALS
6. REFER TO CIVIL DRAWINGS FOR FINISH GRADES, TYP.

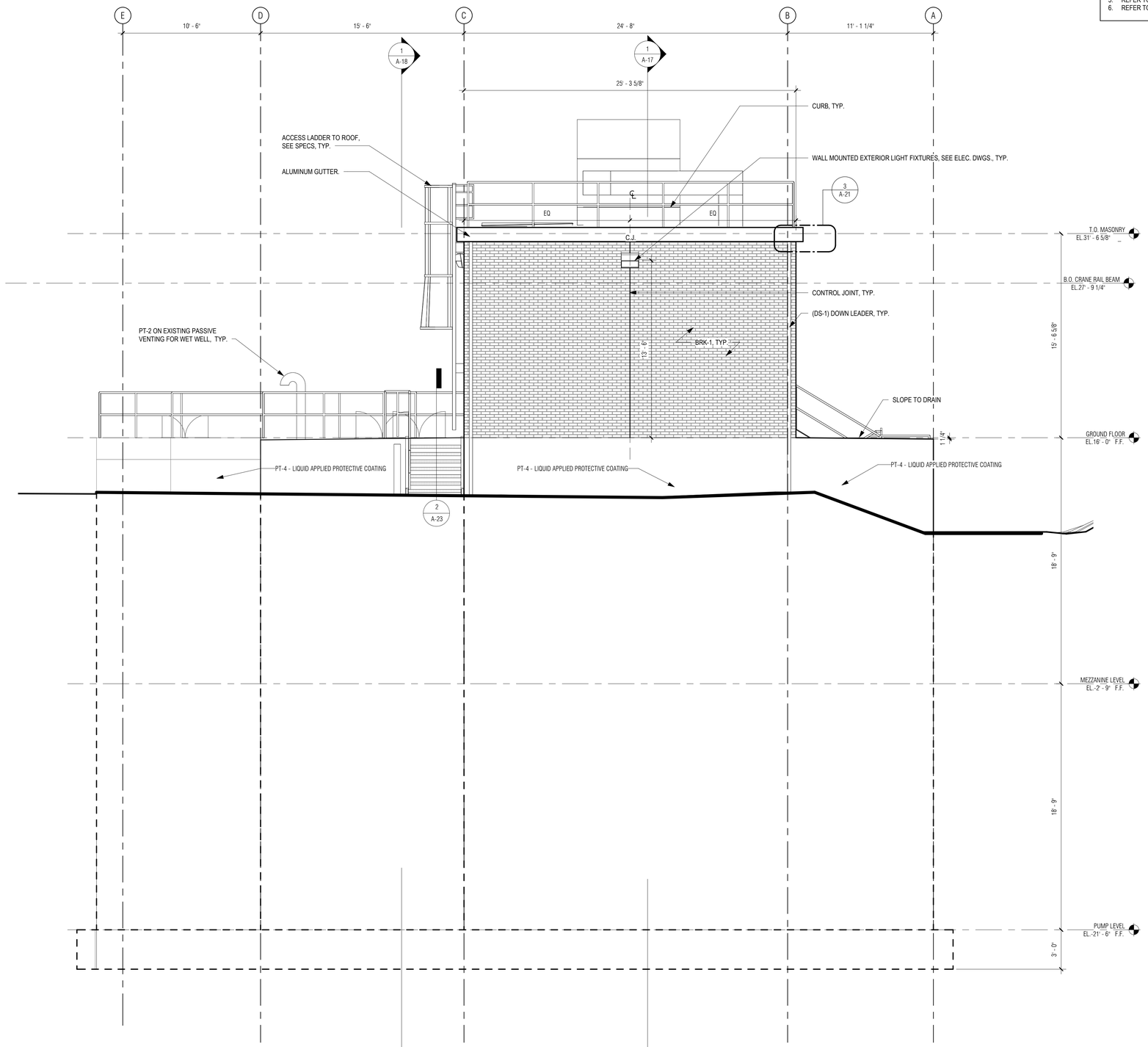

1 WEST ELEVATION
1/4" = 1'-0"

PREPARED BY:

BETA
www.BETA-Inc.com
PLOT DATE: 8/29/2021 3:59:52 PM

REGISTERED PROFESSIONAL

REGISTERED ARCHITECT THOMAS D. MCGRATH No. 6938 BOSTON MASS. COMMONWEALTH OF MASSACHUSETTS

SUBCONSULTANT:

DSK Dewing Schmid Kearns
ARCHITECTS + PLANNERS

30 Monument Square
Suite 200B
Concord, MA
01742
978.371.7500

280 Elm Street
South Dartmouth, MA
02748
508.999.0440

PROJECT

MAIN LIFT PUMP STATION IMPROVEMENTS

TAUNTON, MA

TITLE

WEST EXTERIOR ELEVATION

REVISIONS

NO.	DESCRIPTION	DATE

DRAWN BY: TM

DESIGNED BY: DSK

CHECKED BY: MPS

DSK JOB No.: TPS-1795 DATE: 3/31/2022

BETA JOB No.: 5530

SCALE

As indicated

UNLESS OTHERWISE NOTED OR CHANGED BY REPRODUCTION

CONTRACT 2

SHEET NO.

A-13

P:\PROJECTS\1510 NPS - NEWBURYPORT PUMP STATION\600-NPS-DWGS\601-REV\TTFAMILIES\TITLEBLOCKS\KDG_Arch D 24x36 Vertical Title - BETA

GENERAL NOTES: EXTERIOR ELEVATIONS

1. REFER TO DWG A-1 FOR GENERAL NOTES
2. REFER TO DWG A-2 FOR ABBREVIATIONS, SYMBOLS & MOUNTING HEIGHTS
3. REFER TO DWG A-12 FOR TYPICAL ANNOTATIONS
4. REFER TO DWG A-25 FOR DOOR, WINDOW AND LOUVER SCHEDULES
5. REFER TO DWG A-26 FOR FINISH SCHEDULE AND MATERIALS
6. REFER TO CIVIL DRAWINGS FOR FINISH GRADES, TYP.

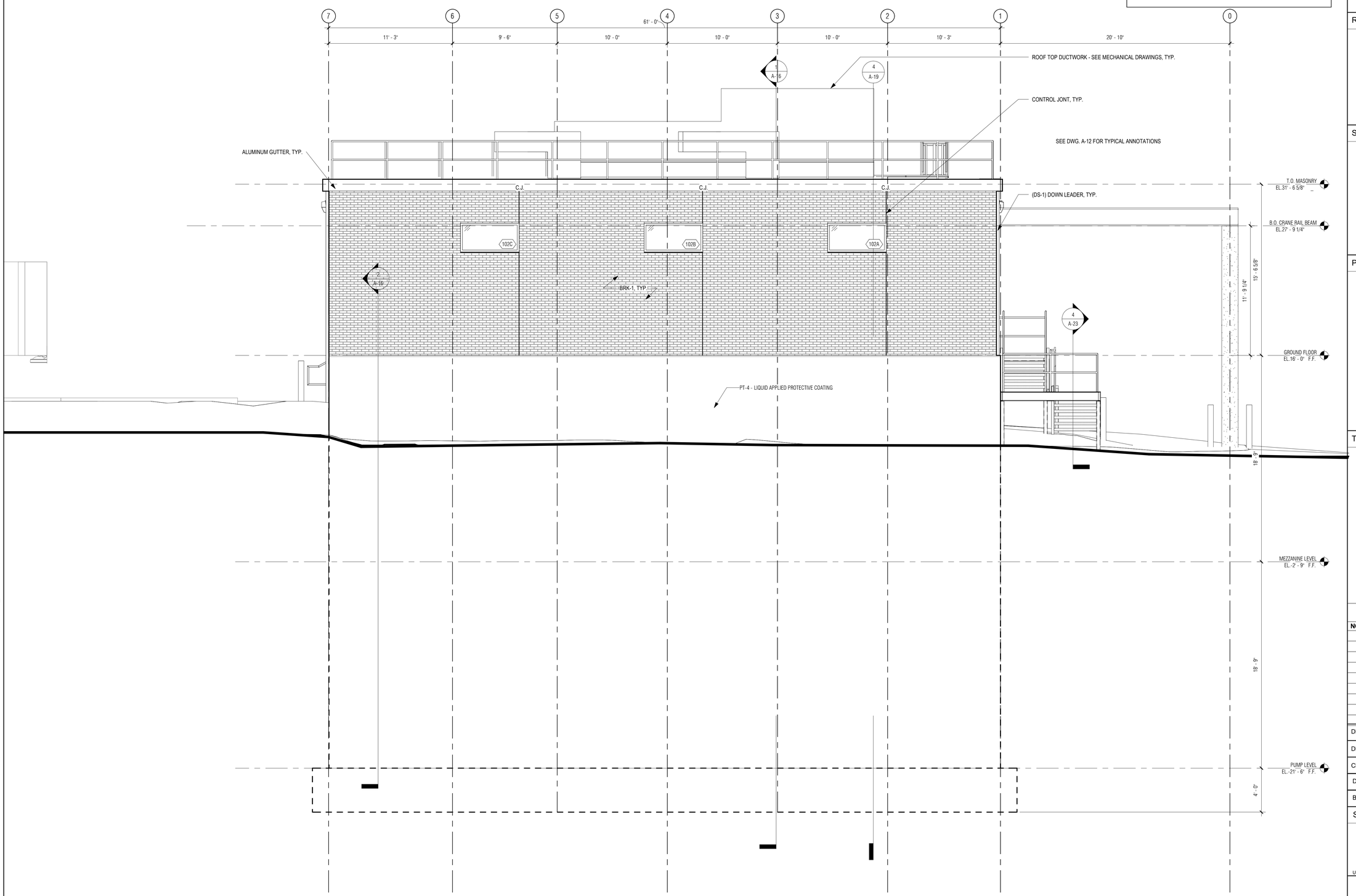

1 SOUTH ELEVATION
1/4" = 1'-0"

PREPARED BY:

BETA
www.BETA-Inc.com
PLOT DATE: 8/29/2021 3:59:54 PM

REGISTERED PROFESSIONAL

REGISTERED ARCHITECT THOMAS D. MCGRATH 6938 BOSTON MASS. COMMONWEALTH OF MASSACHUSETTS

SUBCONSULTANT:

DSK Dewing Schmid Kearns
ARCHITECTS + PLANNERS

30 Monument Square
Suite 200B
Concord, MA
01742
978.371.7500

280 Elm Street
South Dartmouth, MA
02748
508.999.0440

PROJECT

MAIN LIFT PUMP STATION IMPROVEMENTS

TAUNTON, MA

TITLE

SOUTH EXTERIOR ELEVATION

REVISIONS

NO.	DESCRIPTION	DATE

DRAWN BY:	TM
DESIGNED BY:	DSK
CHECKED BY:	MPS
DSK JOB No.: TPS-1795	DATE: 3/31/2022
BETA JOB No.:	5530

SCALE

As indicated

UNLESS OTHERWISE NOTED OR CHANGED BY REPRODUCTION

CONTRACT 2

SHEET NO.

A-14

P:\PROJECTS\1510 NPS - NEWBURYPORT PUMP STATION\600-NPS-DWGS\601-REVIT\FAMILIES\TITLEBLOCKS\KDG_Arch D 24x36 Vertical Title - BETA

GENERAL NOTES: EXTERIOR ELEVATIONS

1. REFER TO DWG A-1 FOR GENERAL NOTES
2. REFER TO DWG A-2 FOR ABBREVIATIONS, SYMBOLS & MOUNTING HEIGHTS
3. REFER TO DWG A-12 FOR TYPICAL ANNOTATIONS
4. REFER TO DWG A-25 FOR DOOR, WINDOW AND LOUVER SCHEDULES
5. REFER TO DWG A-26 FOR FINISH SCHEDULE AND MATERIALS
6. REFER TO CIVIL DRAWINGS FOR FINISH GRADES, TYP.

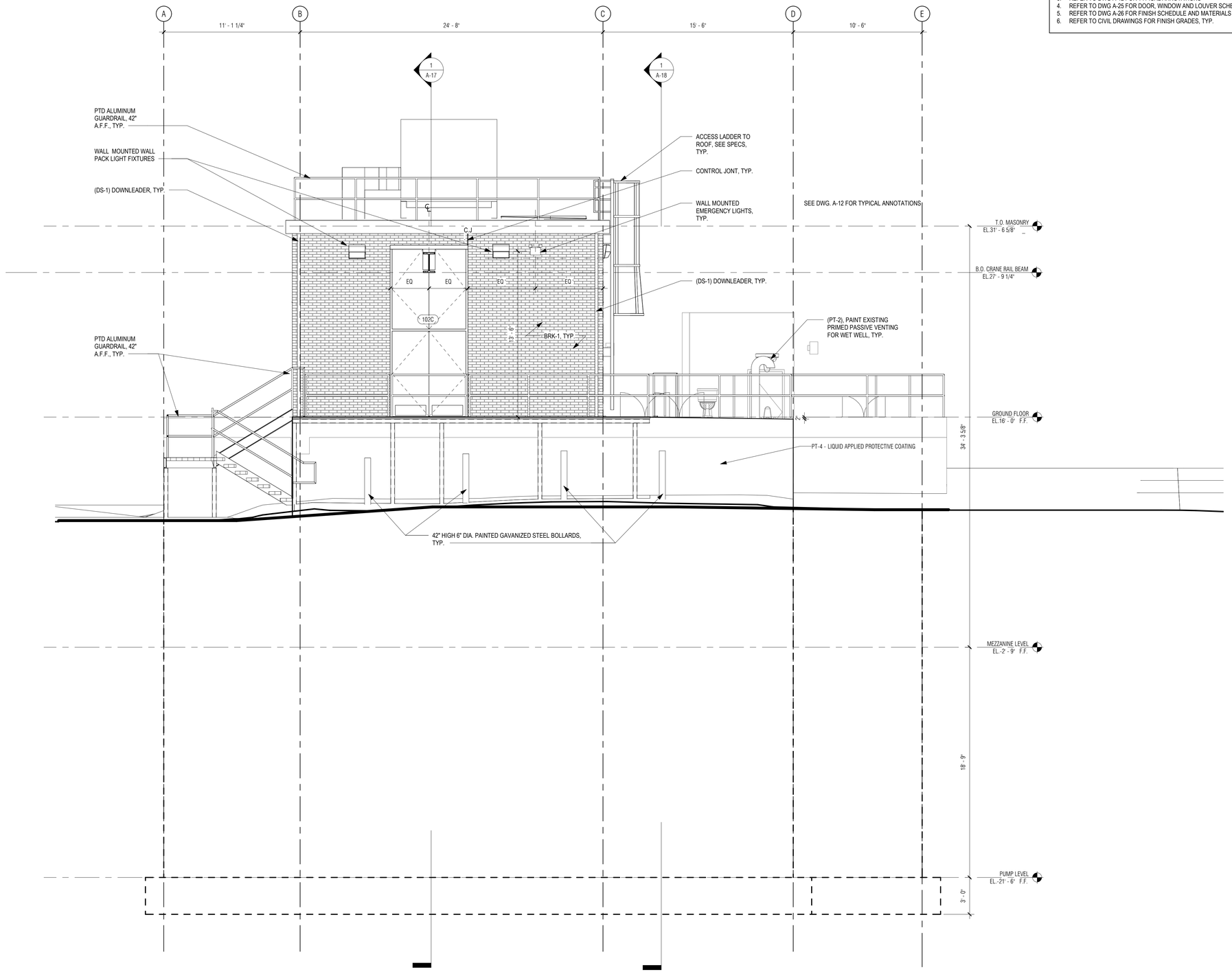

1 EAST ELEVATION
1/4" = 1'-0"

PREPARED BY:

BETA
www.BETA-Inc.com
PLOT DATE: 8/29/2021 3:59:55 PM

REGISTERED PROFESSIONAL

REGISTERED ARCHITECT THOMAS D. MCGRATH No. 6938 BOSTON MASS. COMMONWEALTH OF MASSACHUSETTS

SUBCONSULTANT:

DSK Dewing Schmid Kearns
ARCHITECTS + PLANNERS

30 Monument Square
Suite 200B
Concord, MA
01742
978.371.7500

280 Elm Street
South Dartmouth, MA
02748
508.999.0440

PROJECT

MAIN LIFT PUMP STATION IMPROVEMENTS

TAUNTON, MA

TITLE

EAST EXTERIOR ELEVATION

REVISIONS

NO.	DESCRIPTION	DATE

DRAWN BY: TM
DESIGNED BY: DSK
CHECKED BY: MPS
DSK JOB No.: TPS-1795 DATE: 3/31/2022
BETA JOB No.: 5530

SCALE

As indicated

UNLESS OTHERWISE NOTED OR CHANGED BY REPRODUCTION

CONTRACT 2

SHEET NO.

A-15

P:\PROJECTS\1510 NPS - NEWBURYPORT PUMP STATION\600-NPS-DWGS\601-REVIT\FAMILIES\TITLEBLOCKS\KDG_Arch D 24x36 Vertical Title - BETA

GENERAL NOTES: BUILDING SECTIONS

1. REFER TO DWG A-01 FOR GENERAL NOTES
2. REFER TO DWG A-02 FOR ABBREVIATIONS, SYMBOLS & MOUNTING HEIGHTS
3. REFER TO DWG A-26 FOR DOOR, WINDOW AND LOUVER SCHEDULES
4. REFER TO DWG A-27 FOR FINISH SCHEDULE AND MATERIALS
5. PIPING AND DUCT WORK SHOWN FOR DIAGRAMMATIC PURPOSES, REFER TO ENGINEER DWGS FOR DETAILS

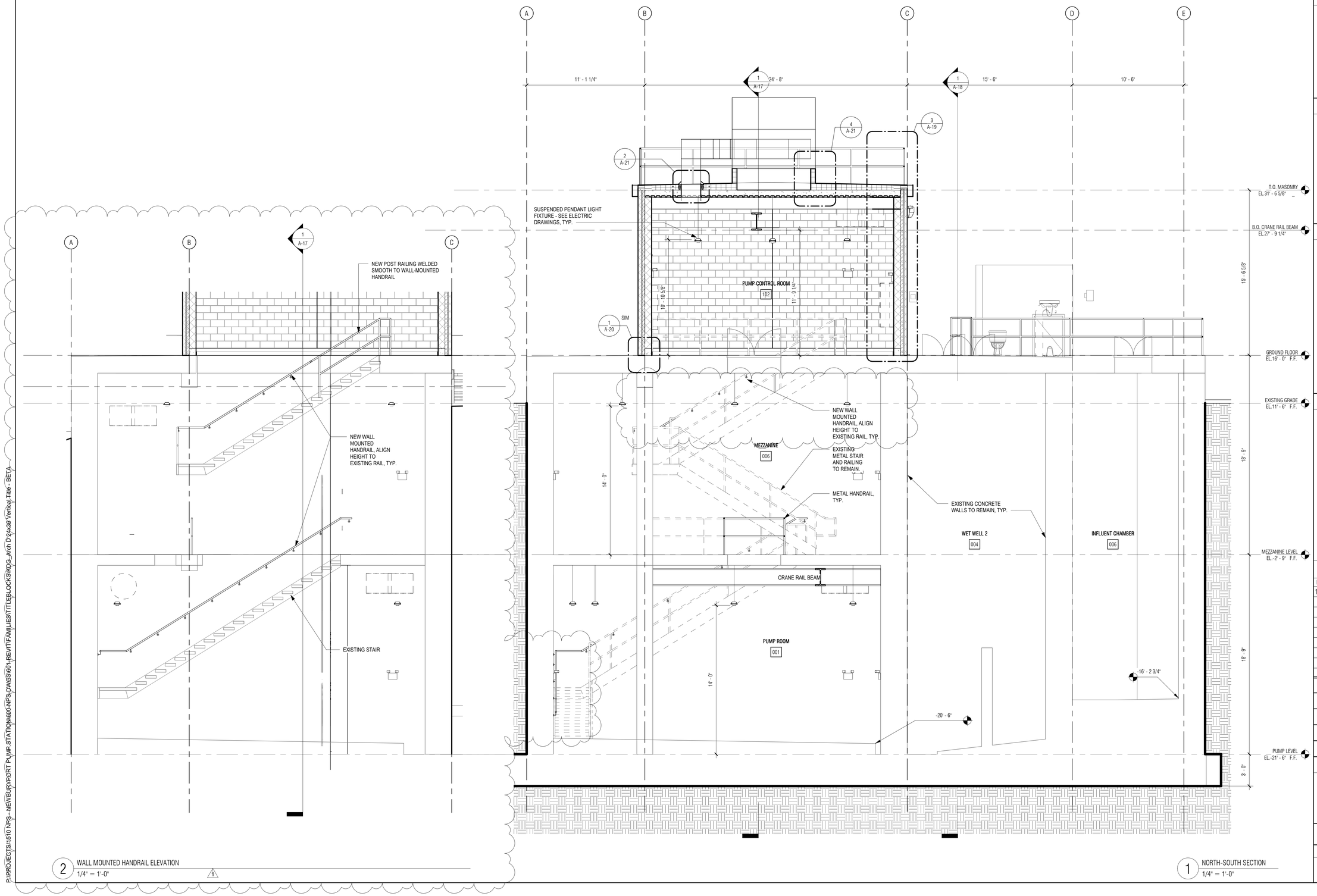

2 WALL MOUNTED HANDRAIL ELEVATION
1/4" = 1'-0"

1 NORTH-SOUTH SECTION
1/4" = 1'-0"

PREPARED BY:

BETA
www.BETA-Inc.com
PLOT DATE: 8/29/2021 3:59:58 PM

REGISTERED PROFESSIONAL

REGISTERED ARCHITECT THOMAS D. HEARNS No. 6938 BOSTON MASS. COMMONWEALTH OF MASSACHUSETTS

SUBCONSULTANT:

DSK Dewing Schmid Kearns
ARCHITECTS + PLANNERS

30 Monument Square
Suite 200B
Concord, MA
01742
978.371.7500

280 Elm Street
South Dartmouth, MA
02748
508.999.0440

PROJECT

MAIN LIFT PUMP STATION IMPROVEMENTS

TAUNTON, MA

TITLE

BUILDING SECTIONS

REVISIONS

NO.	DESCRIPTION	DATE
1	08/30/2021	Railing

DRAWN BY: TM

DESIGNED BY: DSK

CHECKED BY: MPS

DSK JOB No.: TPS-1795 DATE: 3/31/2022

BETA JOB No.: 5530

SCALE

As indicated

UNLESS OTHERWISE NOTED OR CHANGED BY REPRODUCTION

CONTRACT 2

SHEET NO.

A-16

P:\PROJECTS\1510 NPS - NEWBURYPORT PUMP STATION\600-NPS_DWGS\601-REV\TFFAMILIES\TITLEBLOCKS\KDG_Arch D 24x36 Vertical.T86 - BETA -

GENERAL NOTES: BUILDING SECTIONS

1. REFER TO DWG A-01 FOR GENERAL NOTES
2. REFER TO DWG A-02 FOR ABBREVIATIONS, SYMBOLS & MOUNTING HEIGHTS
3. REFER TO DWG A-26 FOR DOOR, WINDOW AND LOUVER SCHEDULES
4. REFER TO DWG A-27 FOR FINISH SCHEDULE AND MATERIALS
5. PIPING AND DUCT WORK SHOWN FOR DIAGRAMMATIC PURPOSES, REFER TO ENGINEER DWGS FOR DETAILS

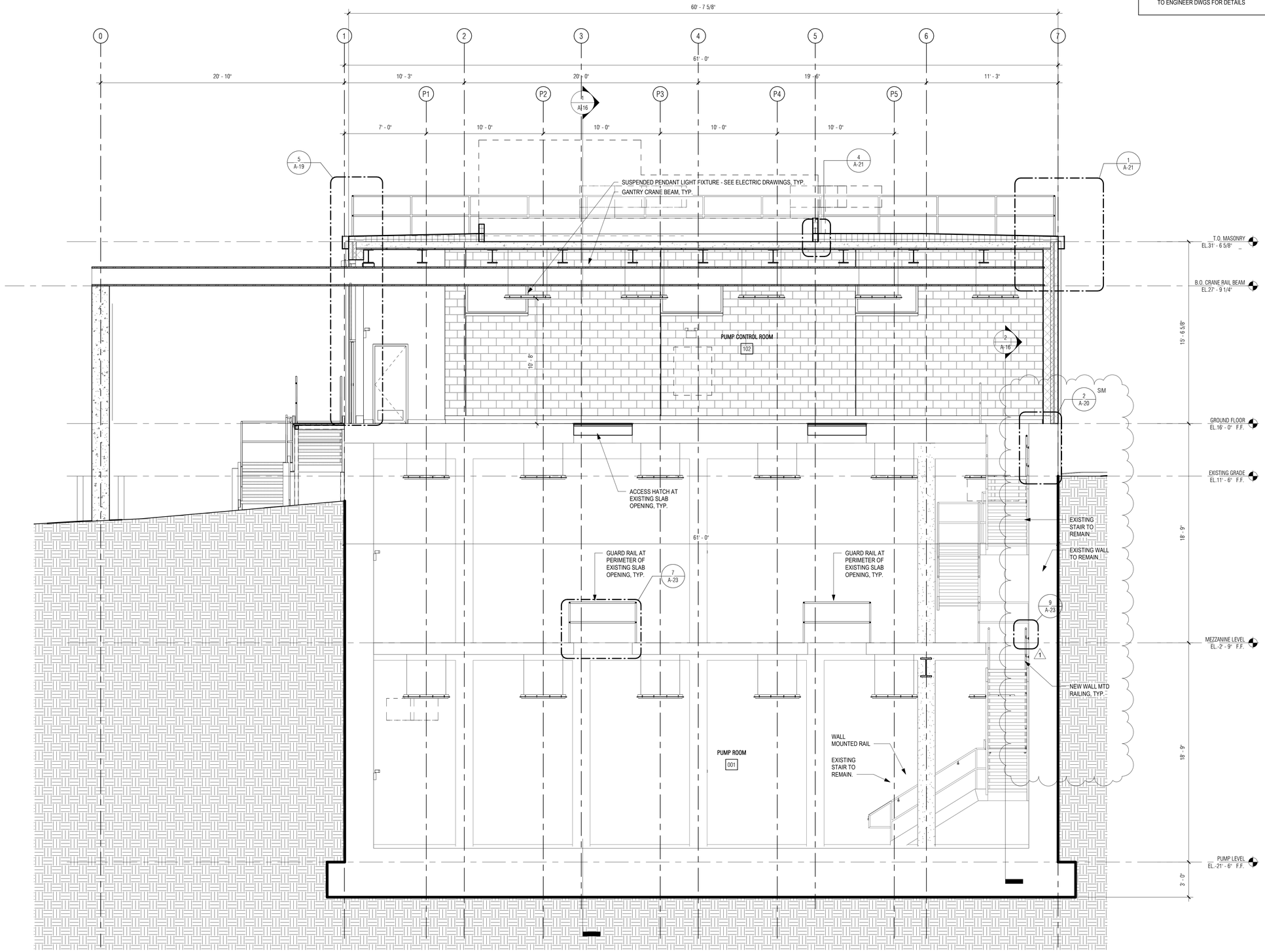

1 EAST-WEST SECTION THROUGH PUMP RM
1/4" = 1'-0"

PREPARED BY:

BETA
www.BETA-Inc.com
PLOT DATE: 8/29/2021 4:00:00 PM

REGISTERED PROFESSIONAL

THOMAS D. MCKEARNS
No. 29938
BOSTON
MASS.
REGISTERED ARCHITECT
COMMONWEALTH OF MASSACHUSETTS

SUBCONSULTANT:

DSK Dewing Schmid Kearns
ARCHITECTS + PLANNERS

30 Monument Square
Suite 200B
Concord, MA
01742
978.371.7500

280 Elm Street
South Dartmouth, MA
02748
508.999.0440

PROJECT

MAIN LIFT PUMP STATION IMPROVEMENTS

TAUNTON, MA

TITLE

BUILDING SECTIONS

REVISIONS

NO.	DESCRIPTION	DATE
1	08/30/2021	Railing

DRAWN BY: TM

DESIGNED BY: DSK

CHECKED BY: MPS

DSK JOB No.: TPS-1795 DATE: 3/31/2022

BETA JOB No.: 5530

SCALE

As indicated

UNLESS OTHERWISE NOTED OR CHANGED BY REPRODUCTION

CONTRACT 2

SHEET NO.

A-17

P:\PROJECTS\1510 NPS - NEWBURYPORT PUMP STATION\600-NPS-DWGS\601-REVIT\FAMILIES\TITLEBLOCKS\KDG_Arch D 24x36 Vertical Title - BETA

GENERAL NOTES: BUILDING SECTIONS

1. REFER TO DWG A-01 FOR GENERAL NOTES
2. REFER TO DWG A-02 FOR ABBREVIATIONS, SYMBOLS & MOUNTING HEIGHTS
3. REFER TO DWG A-26 FOR DOOR, WINDOW AND LOUVER SCHEDULES
4. REFER TO DWG A-27 FOR FINISH SCHEDULE AND MATERIALS
5. PIPING AND DUCT WORK SHOWN FOR DIAGRAMMATIC PURPOSES, REFER TO ENGINEER DWGS FOR DETAILS

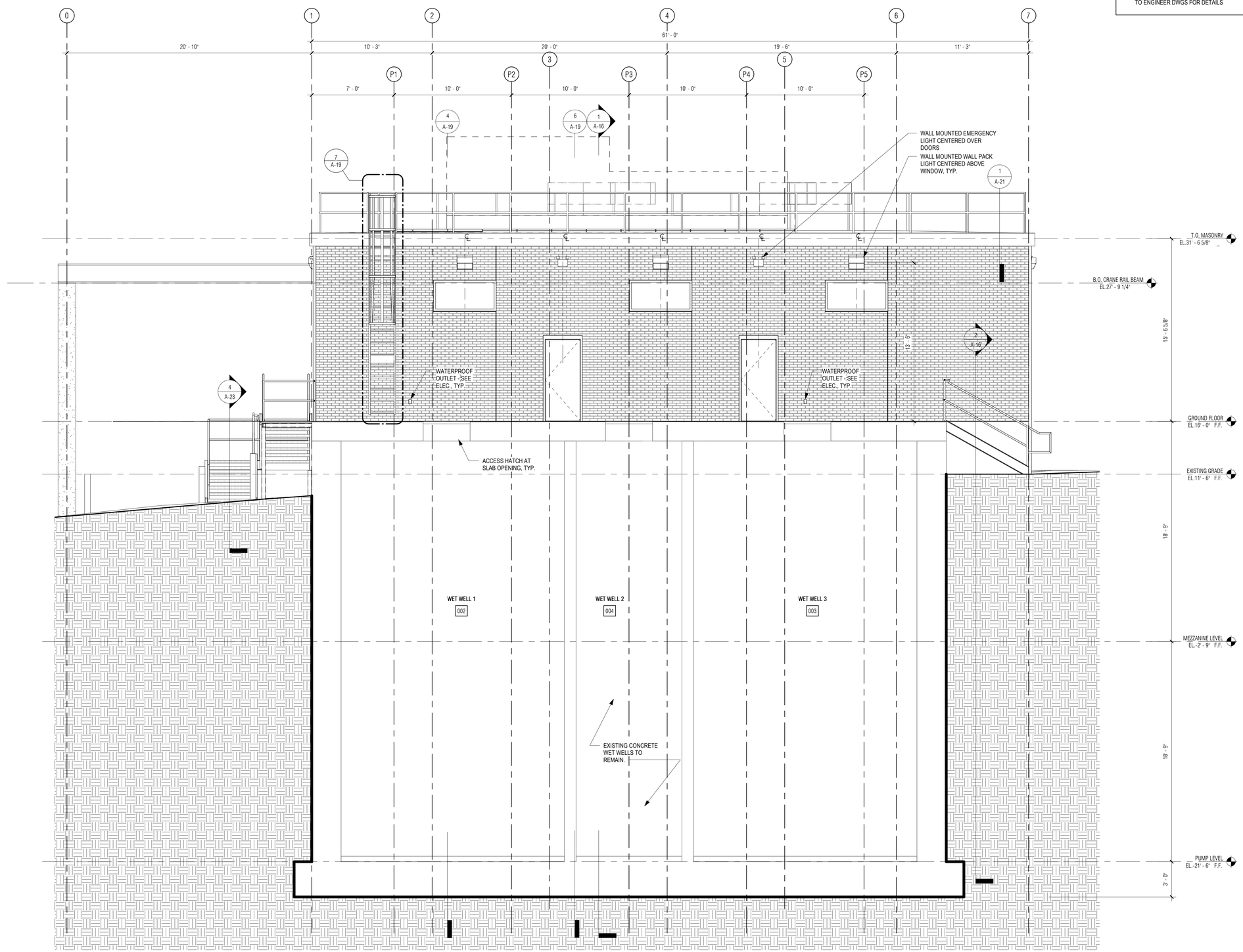

1 EAST-WEST SECTION THROUGH WET WELLS
1/4" = 1'-0"

PREPARED BY:

BETA
www.BETA-Inc.com
PLOT DATE: 8/29/2021 4:00:02 PM

REGISTERED PROFESSIONAL

REGISTERED ARCHITECT
THOMAS D. MCGRATH
No. 26938
BOSTON
MASS
COMMONWEALTH OF MASSACHUSETTS

SUBCONSULTANT:

DSK Dewing Schmid Kearns
ARCHITECTS + PLANNERS

30 Monument Square
Suite 200B
Concord, MA
01742
978.371.7500

280 Elm Street
South Dartmouth, MA
02748
508.999.0440

PROJECT

MAIN LIFT PUMP STATION IMPROVEMENTS

TAUNTON, MA

TITLE

BUILDING SECTIONS

REVISIONS

NO.	DESCRIPTION	DATE

DRAWN BY:	TM
DESIGNED BY:	DSK
CHECKED BY:	MPS
DSK JOB No.: TPS-1795	DATE: 3/31/2022
BETA JOB No.:	5530

SCALE

As indicated

UNLESS OTHERWISE NOTED OR CHANGED BY REPRODUCTION

CONTRACT 2

SHEET NO.

A-18

P:\PROJECTS\1510 NPS - NEWBURYPORT PUMP STATION\600-NPS-DWGS\601-REV\TFAMILIES\TITLEBLOCKS\KDG_Arch D 24x36 Vertical Title - BETA

GENERAL NOTES: DETAILS

1. REFER TO DWG A-01 FOR GENERAL NOTES
2. REFER TO DWG A-02 FOR ABBREVIATIONS, SYMBOLS, MOUNTING HEIGHTS

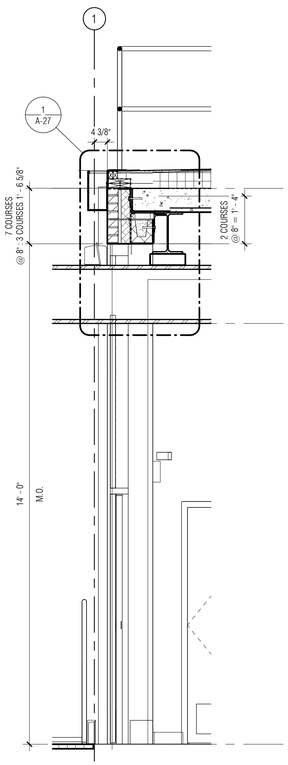

5 TYP. SECTION @ CRANE
1/2" = 1'-0"

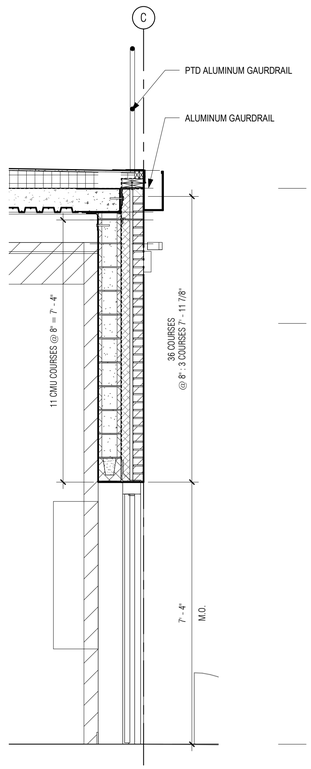

6 TYP. SECTION @ SIDE DOOR
1/2" = 1'-0"

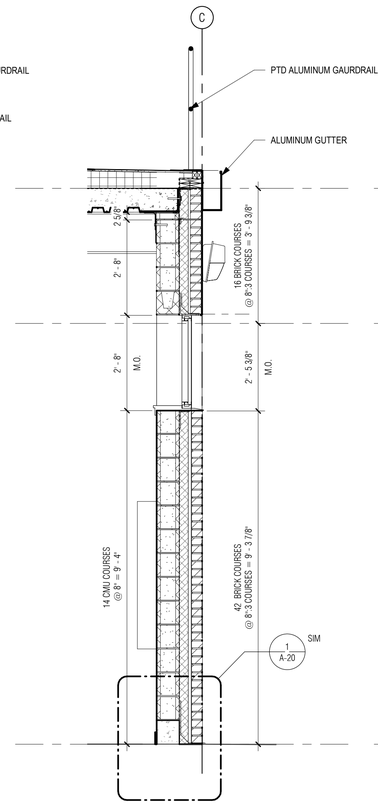

4 TYP. SECTION @ WINDOW
1/2" = 1'-0"

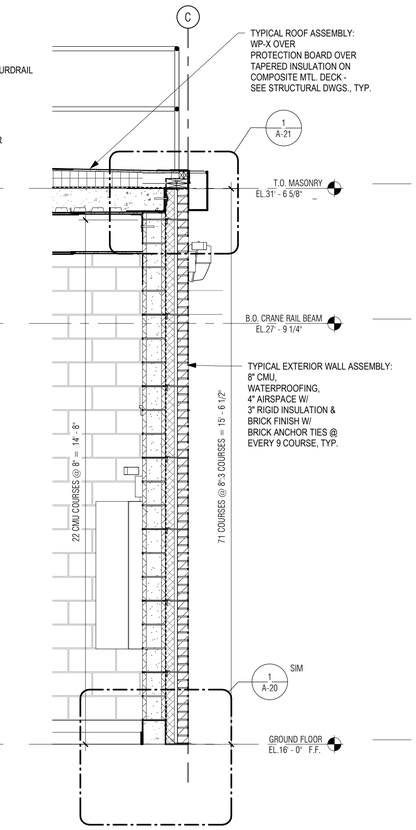

3 TYP. SECTION AT EXTERIOR WALL
1/2" = 1'-0"

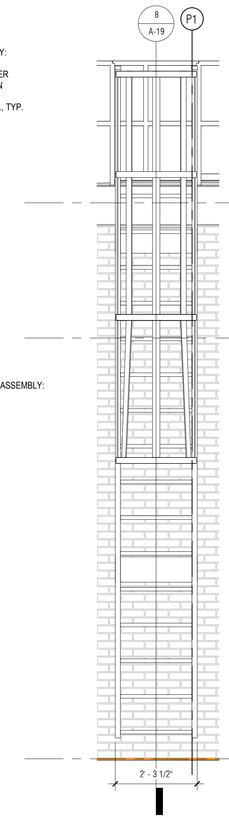

7 TYP. LADDER ELEVATION
1/2" = 1'-0"

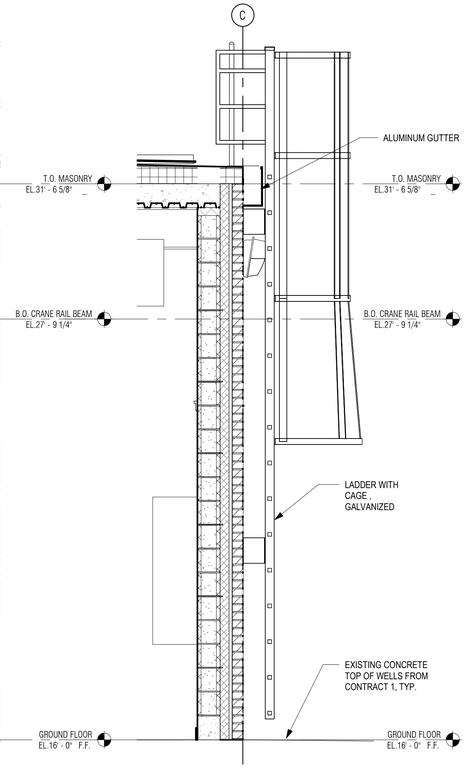

8 LADDER SECTION
1/2" = 1'-0"

PREPARED BY:

BETA
www.BETA-Inc.com
PLOT DATE: 8/29/2021 4:00:05 PM

REGISTERED PROFESSIONAL

SUBCONSULTANT:

DSK Dewing Schmid Kearns
ARCHITECTS + PLANNERS

30 Monument Square
Suite 200B
Concord, MA
01742
978.371.7500

280 Elm Street
South Dartmouth, MA
02748
508.999.0440

PROJECT

MAIN LIFT PUMP STATION IMPROVEMENTS

TAUNTON, MA

TITLE

WALL SECTIONS

REVISIONS

NO.	DESCRIPTION	DATE

DRAWN BY: TM

DESIGNED BY: DSK

CHECKED BY: MPS

DSK JOB No.: TPS-1795 DATE: 3/31/2022

BETA JOB No.: 5530

SCALE

As indicated

UNLESS OTHERWISE NOTED OR CHANGED BY REPRODUCTION

CONTRACT 2

SHEET NO.

A-19

P:\PROJECTS\1510 NPS - NEWBURYPORT PUMP STATION\600-NPS-DWGS\601-REV\TIFAMILIES\TITLEBLOCKS\KDG_Arch D 24x36 Vertical Title - BETA

GENERAL NOTES: DETAILS

1. REFER TO DWG A-01 FOR GENERAL NOTES
2. REFER TO DWG A-02 FOR ABBREVIATIONS, SYMBOLS, MOUNTING HEIGHTS

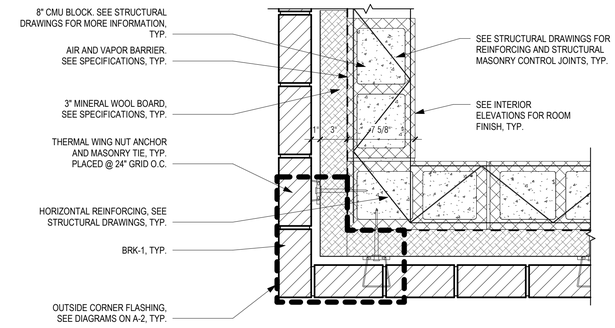

5 PLAN DETAIL - BRICK - CORNER DETAILS
1 1/2" = 1'-0"

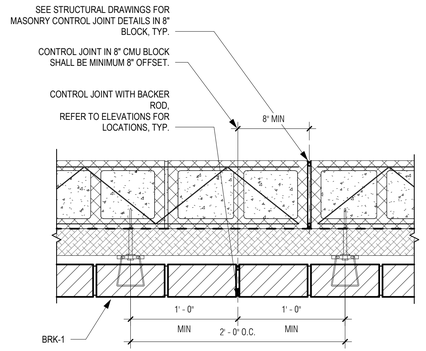

4 PLAN DETAIL - BRICK CONTROL JOINT
1 1/2" = 1'-0"

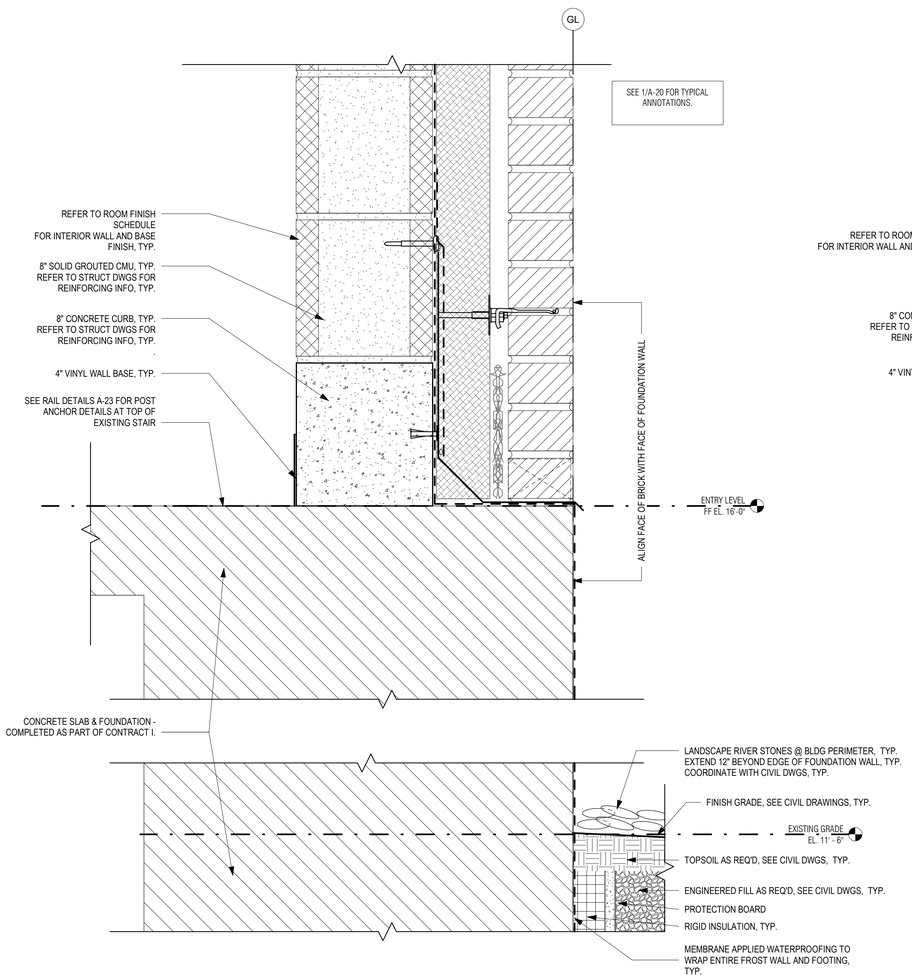

2 TYP. WALL SECTION DETAIL @ EXT RC WALL
3" = 1'-0"

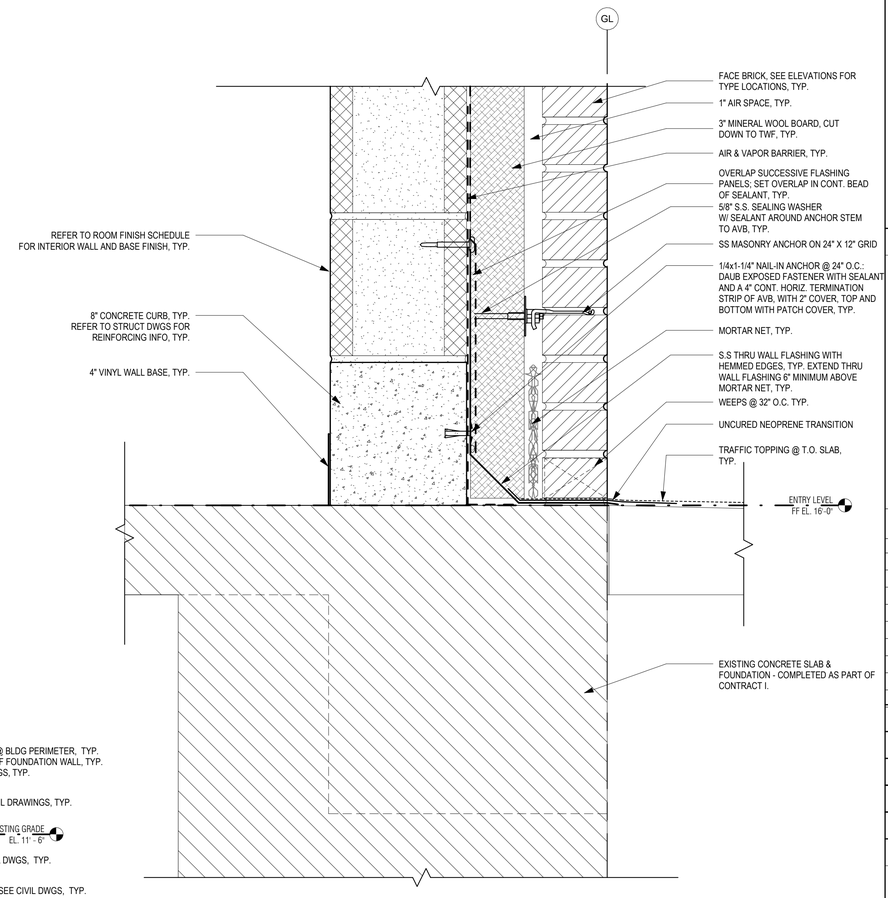

1 TYP. WALL SECTION DETAIL @ STRUCTURED SLAB AND RC WALL
3" = 1'-0"

PREPARED BY:

BETA
www.BETA-Inc.com
PLOT DATE: 8/29/2021 4:00:06 PM

REGISTERED PROFESSIONAL

REGISTERED ARCHITECT THOMAS D. MCGRATH JR. 6938 BOSTON MASS. COMMONWEALTH OF MASSACHUSETTS

SUBCONSULTANT:

DSK Dewing Schmid Kearns
ARCHITECTS + PLANNERS

30 Monument Square
Suite 200B
Concord, MA
01742
978.371.7500

280 Elm Street
South Dartmouth, MA
02748
508.999.0440

PROJECT

MAIN LIFT PUMP STATION IMPROVEMENTS

TAUNTON, MA

TITLE

MASONRY DETAILS

REVISIONS

NO.	DESCRIPTION	DATE

DRAWN BY: TM

DESIGNED BY: DSK

CHECKED BY: MPS

DSK JOB No.: TPS-1795 DATE: 3/31/2022

BETA JOB No.: 5530

SCALE

As indicated

UNLESS OTHERWISE NOTED OR CHANGED BY REPRODUCTION

CONTRACT 2

SHEET NO.

A-20

P:\PROJECTS\1510 NPS - NEWBURYPORT PUMP STATION\600-NPS-DWGS\601-REV\TTFAMILIES\TITLEBLOCKS\KDG_Arch D 24x36 Vertical Title - BETA

GENERAL NOTES: DETAILS

1. REFER TO DWG A-01 FOR GENERAL NOTES
2. REFER TO DWG A-02 FOR ABBREVIATIONS, SYMBOLS, MOUNTING HEIGHTS

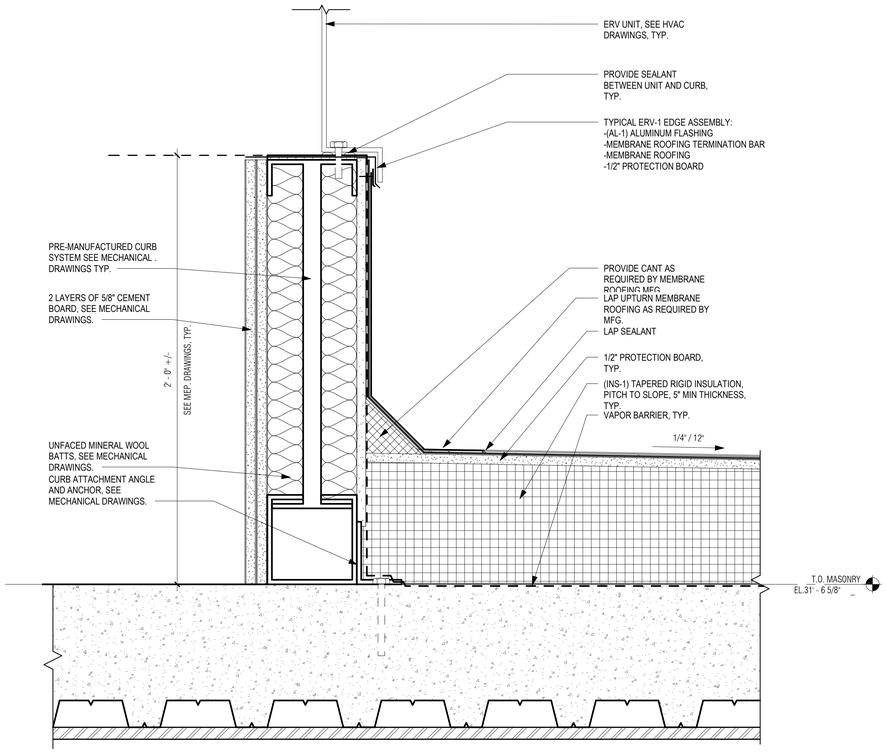

4 TYPICAL ERV-1 ROOF CURB DETAIL
3" = 1'-0"

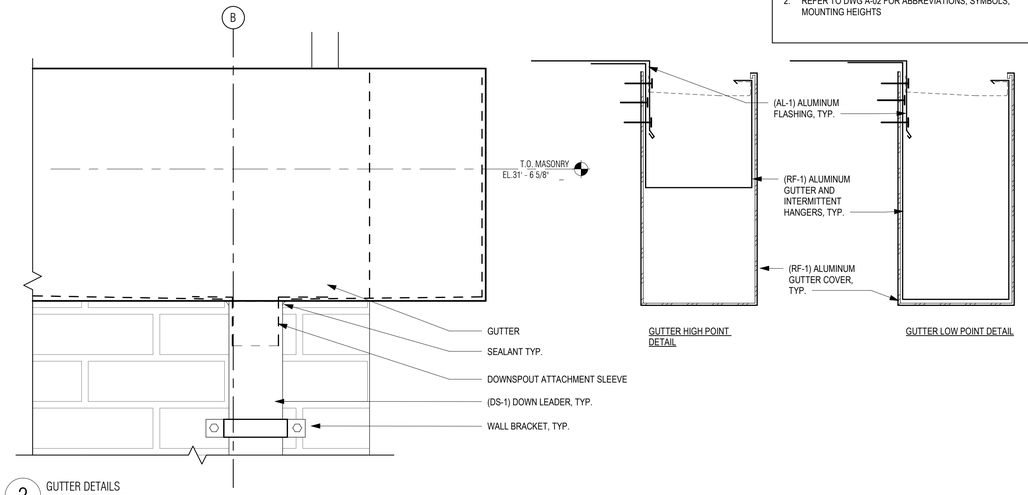

3 GUTTER DETAILS
3" = 1'-0"

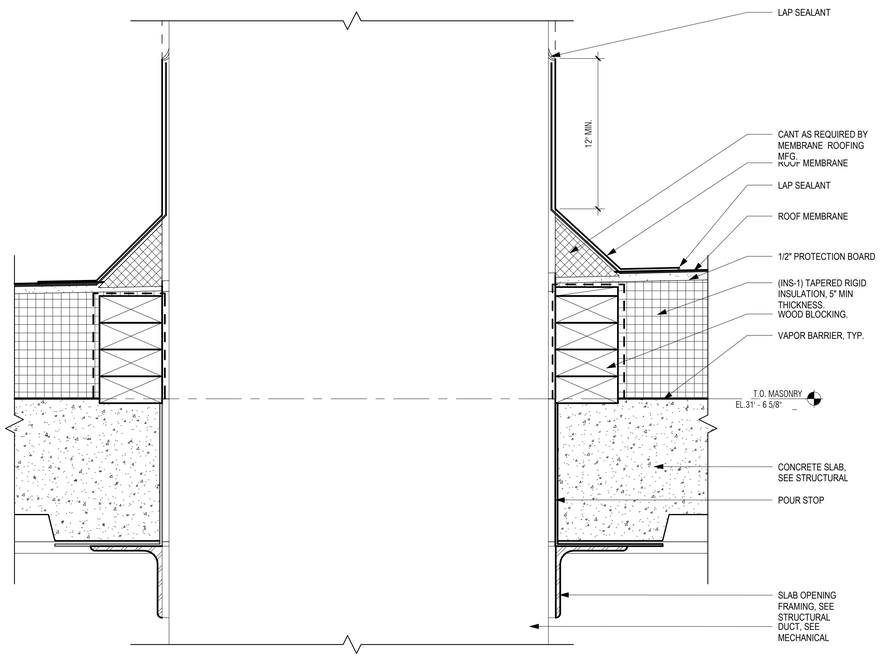

2 DUCT PENETRATION DETAIL
3" = 1'-0"

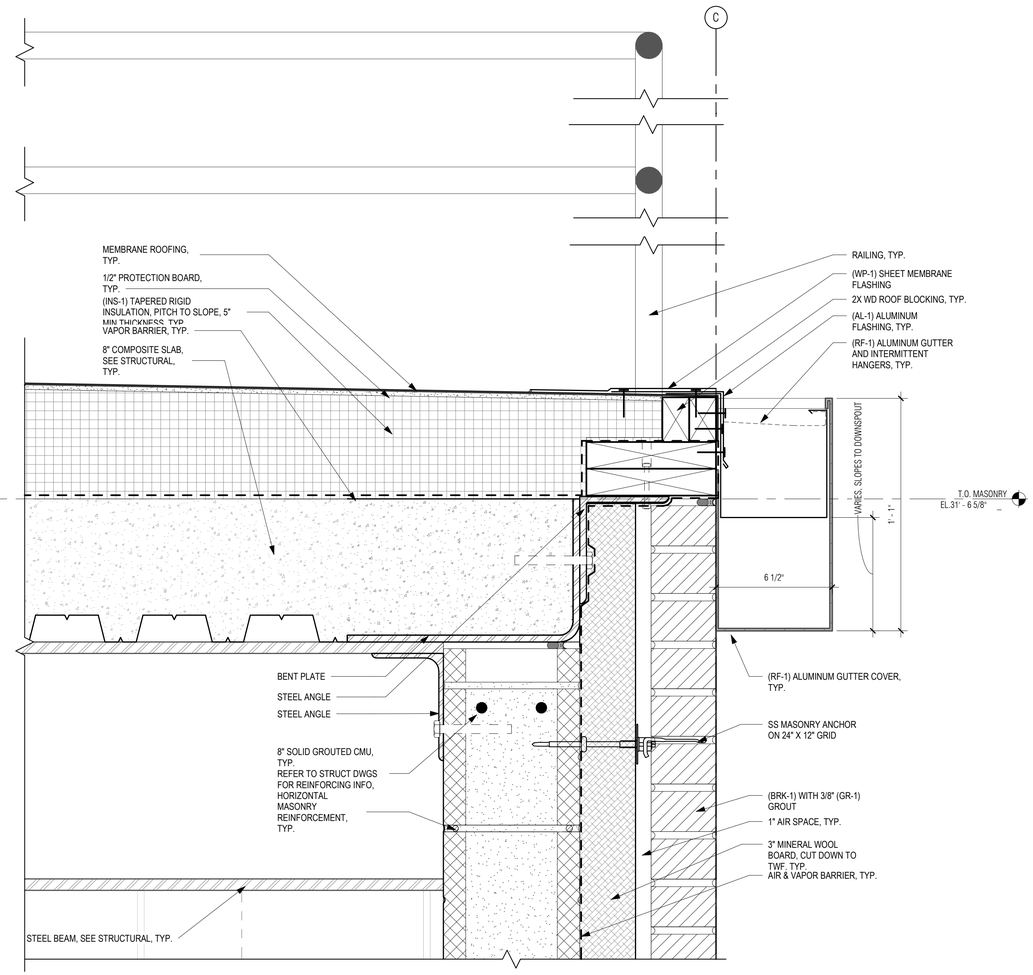

1 TYP. SECTION DETAIL @ PARAPET
3" = 1'-0"

PREPARED BY:

BETA
www.BETA-Inc.com
PLOT DATE: 8/29/2021 4:00:08 PM

REGISTERED PROFESSIONAL

REGISTERED ARCHITECT THOMAS D. MEARS No. 6938 BOSTON MASS. COMMONWEALTH OF MASSACHUSETTS

SUBCONSULTANT:

DSK Dewing Schmid Kearns
ARCHITECTS + PLANNERS

30 Monument Square
Suite 200B
Concord, MA
01742
978.371.7500

280 Elm Street
South Dartmouth, MA
02748
508.999.0440

PROJECT

MAIN LIFT PUMP STATION IMPROVEMENTS

TAUNTON, MA

TITLE

ROOF DETAILS

REVISIONS

NO.	DESCRIPTION	DATE

DRAWN BY:	TM
DESIGNED BY:	DSK
CHECKED BY:	MPS
DSK JOB No.:	TPS-1795 DATE: 3/31/2022
BETA JOB No.:	5530

SCALE

As indicated

UNLESS OTHERWISE NOTED OR CHANGED BY REPRODUCTION

CONTRACT 2

SHEET NO.

A-21

P:\PROJECTS\1510 NPS - NEWBURYPORT PUMP STATION\600-NPS-DWGS\601-REV\TTFAMILIES\TITLEBLOCKS\KDG_Arch D 24x36 Vertical Title - BETA

TOILET ACCESSORY SCHEDULE	
CODE	DESCRIPTION
TA-1	24"x36" MIRROR
TA-2	CONTURA SERIES SURFACE MOUNTED SOAP DISPENSER
TA-3	SEMI-RECESSED CONVERTIBLE PAPER TOWEL DISPENSER AND WASTE RECEPTACLE
TA-4	SURFACE MOUNTED DOUBLE TOILET PAPER DISPENSER

GENERAL NOTES: INTERIOR ELEVATIONS

1. REFER TO DWG A-01 FOR GENERAL NOTES
2. REFER TO DWG A-02 FOR ABBREVIATIONS, SYMBOLS & MOUNTING HEIGHTS
3. REFER TO DWG A-26 FOR DOOR, WINDOW AND LOUVER SCHEDULES
4. REFER TO DWG A-27 FOR FINISH SCHEDULE AND MATERIALS
5. ALL FURNITURE SHOWN FOR REFERENCE ONLY, N.I.C., TYP.
6. REFER TO MEP DRAWINGS FOR MORE INFORMATION ABOUT PLUMBING AND LIGHT FIXTURES, MECHANICAL AND ELECTRICAL EQUIPMENT AND SERVICES, TYP.

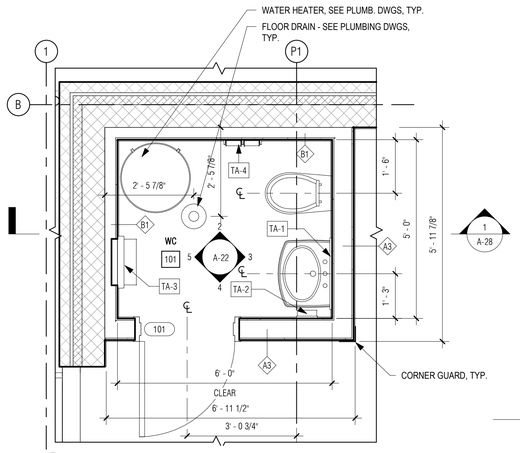

1 ENLARGED WC PLAN
1/2" = 1'-0"

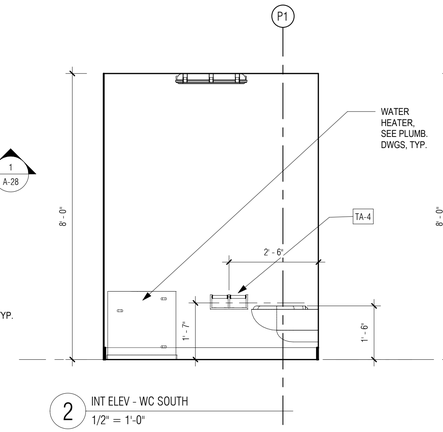

2 INT ELEV - WC SOUTH
1/2" = 1'-0"

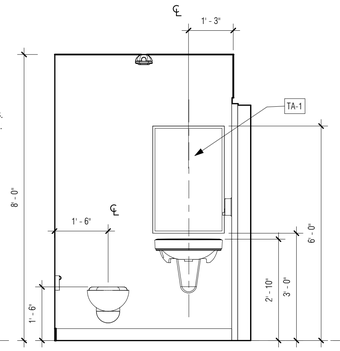

3 INT ELEV - WC WEST
1/2" = 1'-0"

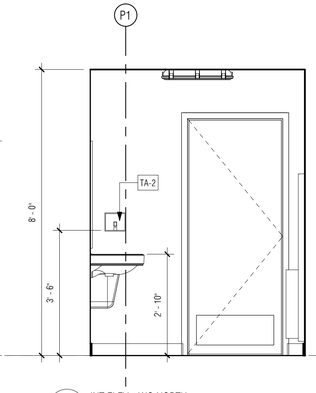

4 INT ELEV - WC NORTH
1/2" = 1'-0"

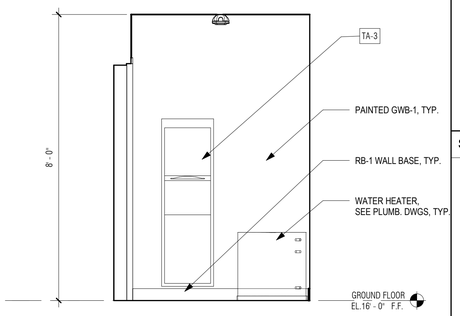

5 INT ELEV - WC EAST
1/2" = 1'-0"

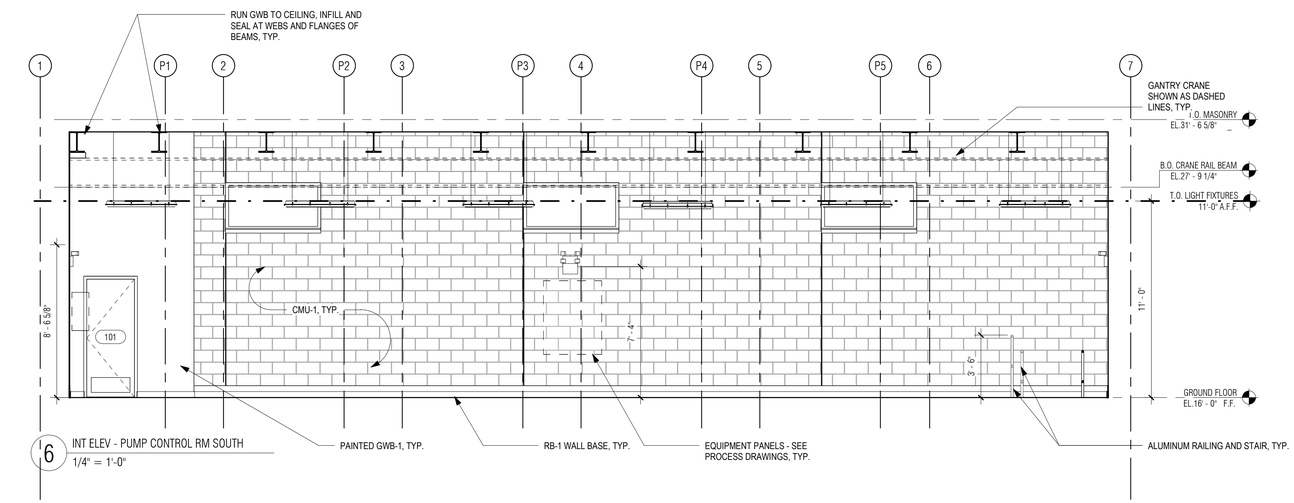

6 INT ELEV - PUMP CONTROL RM SOUTH
1/4" = 1'-0"

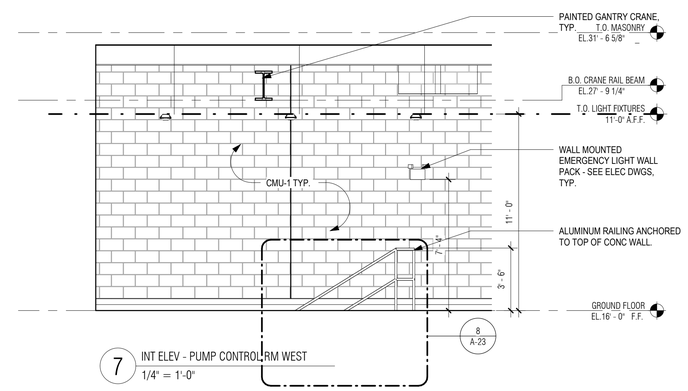

7 INT ELEV - PUMP CONTROL RM WEST
1/4" = 1'-0"

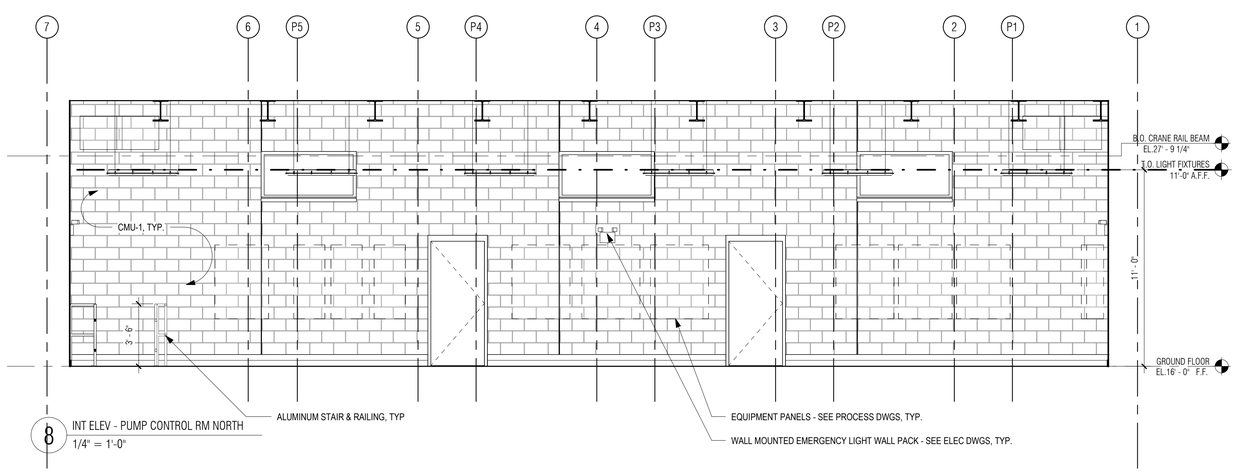

8 INT ELEV - PUMP CONTROL RM NORTH
1/4" = 1'-0"

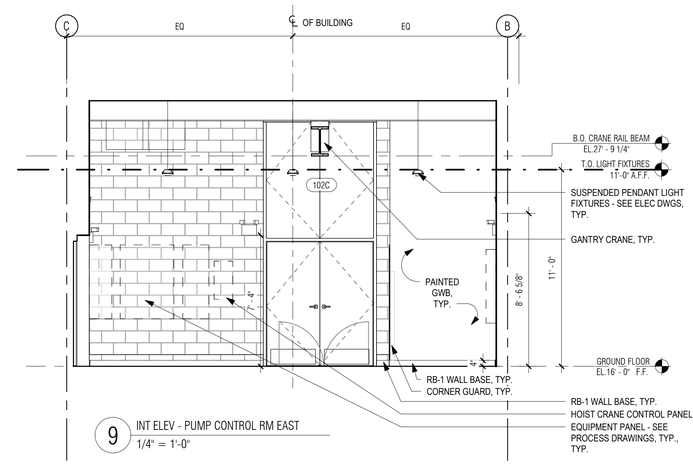

9 INT ELEV - PUMP CONTROL RM EAST
1/4" = 1'-0"

PREPARED BY:

BETA
www.BETA-Inc.com
PLOT DATE: 8/29/2021 4:00:13 PM

REGISTERED PROFESSIONAL

REGISTERED ARCHITECT THOMAS D. MAGUIRE JR. No. 29936 BOSTON MASS. COMMONWEALTH OF MASSACHUSETTS

SUBCONSULTANT:

DSK Dewing Schmid Kearns
ARCHITECTS + PLANNERS

30 Monument Square
Suite 200B
Concord, MA
01742
978.371.7500

280 Elm Street
South Dartmouth, MA
02748
508.999.0440

PROJECT

MAIN LIFT PUMP STATION IMPROVEMENTS

TAUNTON, MA

TITLE

INTERIOR ELEVATIONS AND WC PLAN

REVISIONS

NO.	DESCRIPTION	DATE

DRAWN BY:	TM
DESIGNED BY:	DSK
CHECKED BY:	MPS
DSK JOB No.:	TPS-1795 DATE: 3/31/2022
BETA JOB No.:	5530

SCALE

As indicated

UNLESS OTHERWISE NOTED OR CHANGED BY REPRODUCTION

CONTRACT 2

SHEET NO.

A-22

P:\PROJECTS\1510 NPS - NEWBURYPORT PUMP STATION\600-NPS-DWGS\601-REV\TTFAMILIES\TITLEBLOCKS\KDG_Arch D 24x36 Vertical Title - BETA

GENERAL NOTES: DETAILS

1. REFER TO DWG A-01 FOR GENERAL NOTES
2. REFER TO DWG A-02 FOR ABBREVIATIONS, SYMBOLS, MOUNTING HEIGHTS

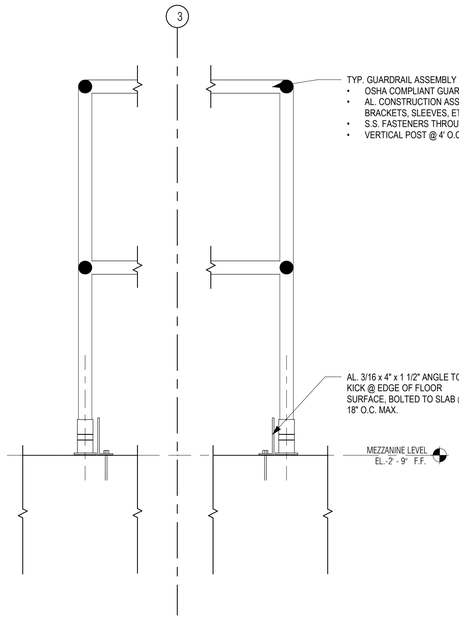

7 TYPICAL SECTION THROUGH GUARD RAIL @ MEZZANINE SLAB OPENING
1 1/2" = 1'-0"

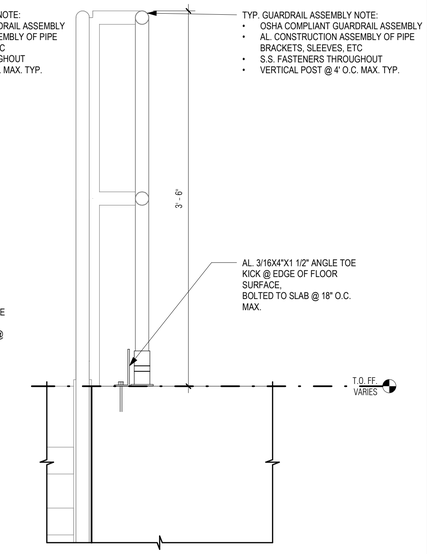

6 TYP RAILING DTL
1 1/2" = 1'-0"

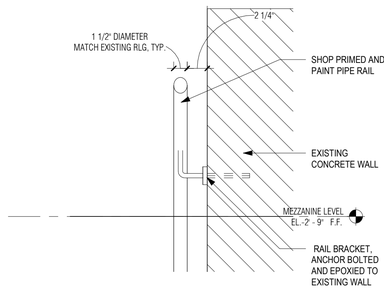

9 TYPICAL BRACKET FOR WALL MOUNTED RAILING
1 1/2" = 1'-0"

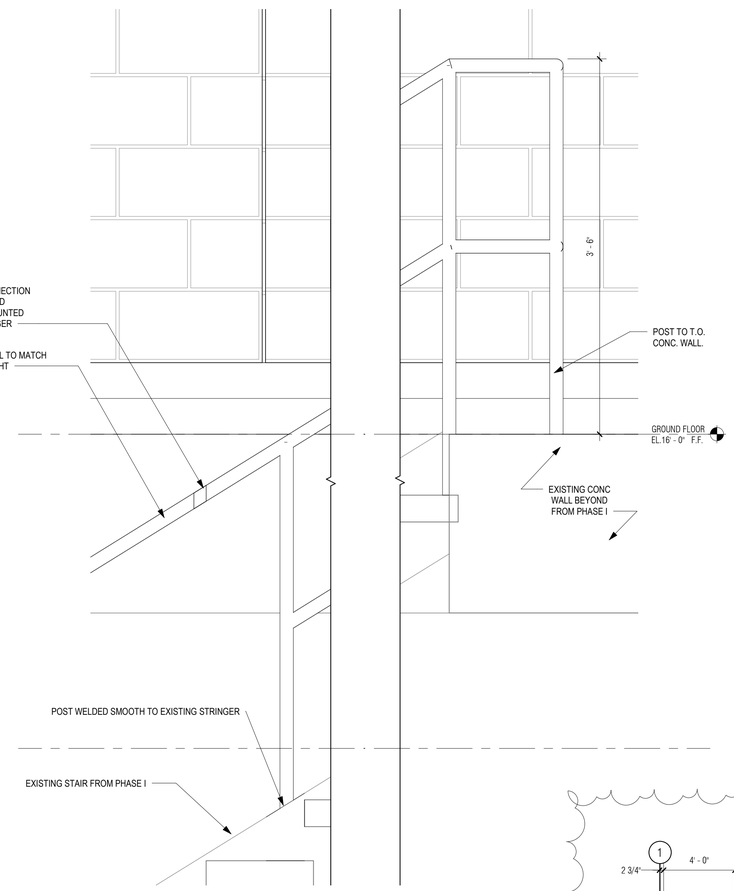

8 RAILING DETAIL AT T.O.W.
1 1/2" = 1'-0"

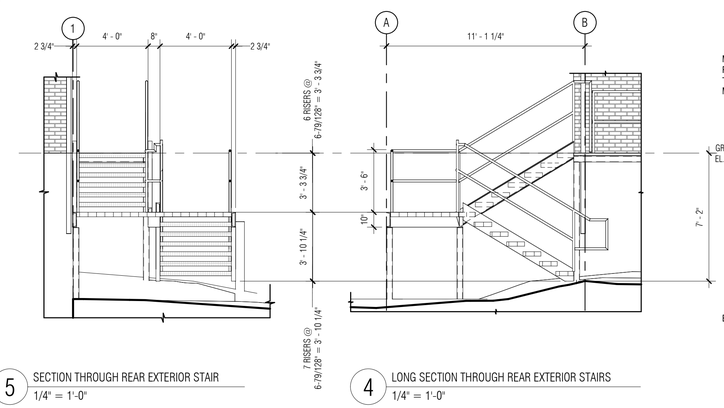

5 SECTION THROUGH REAR EXTERIOR STAIR
1/4" = 1'-0"

4 LONG SECTION THROUGH REAR EXTERIOR STAIRS
1/4" = 1'-0"

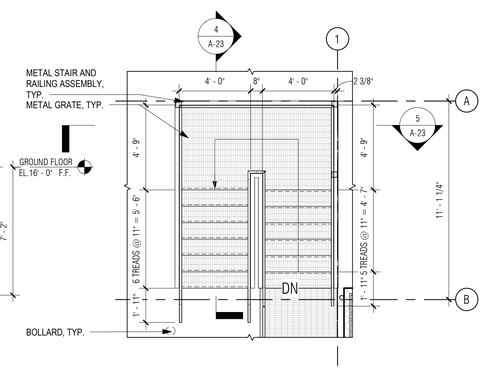

3 ENLARGED STAIR PLAN - EXTERIOR REAR STAIR
1/4" = 1'-0"

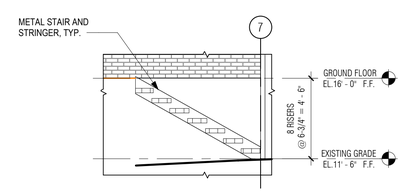

2 SECTION THROUGH EXTERIOR ENTRY STAIR "B"
1/4" = 1'-0"

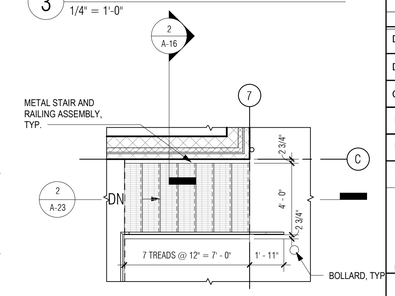

1 ENLARGED STAIR "B" PLAN - EXTERIOR ENTRY STAIR "B"
1/4" = 1'-0"

PREPARED BY:

BETA
www.BETA-Inc.com
PLOT DATE: 8/29/2021 4:00:16 PM

REGISTERED PROFESSIONAL

REGISTERED ARCHITECT THOMAS D. MCGRATH No. 6938 BOSTON MASS. COMMONWEALTH OF MASSACHUSETTS

SUBCONSULTANT:

DSK Dewing Schmid Kearns
ARCHITECTS + PLANNERS

30 Monument Square
Suite 200B
Concord, MA
01742
978.371.7500

280 Elm Street
South Dartmouth, MA
02748
508.999.0440

PROJECT

MAIN LIFT PUMP STATION IMPROVEMENTS

TAUNTON, MA

TITLE

EXTERIOR STAIR SECTIONS AND TYPICAL RAILING DETAILS

REVISIONS

NO.	DESCRIPTION	DATE
1	08/30/2021	Railing

DRAWN BY:	TM
DESIGNED BY:	DSK
CHECKED BY:	MPS
DSK JOB No.:	TPS-1795 DATE: 3/31/2022
BETA JOB No.:	5530

SCALE

As indicated

UNLESS OTHERWISE NOTED OR CHANGED BY REPRODUCTION

CONTRACT 2

SHEET NO.

A-23

P:\PROJECTS\1510 NPS - NEWBURYPORT PUMP STATION\600-NPS-DWGS\601-REV\TTFAMILIES\TITLEBLOCKS\KDG_Arch\D 24x36 Vertical Title - BETA

HARDWARE SCHEDULE

HD-1 ENTRANCE LEVER SET
1 1/2 BUTTS
BULB WEATHER STRIPPING ALL AROUND
BOTTOM SWEEP
MOP PLATE INTERIOR SIDE ONLY
HEAVY DUTY THRESHOLD WITH GASKET
OVERHEAD CLOSER
SILENCER

HD-3A MULTI- SET LOWER DOORS
3 BUTTS
BULB WEATHER STRIPPING ALL AROUND
STORE ROOM FUNCTION LEVER SET ON ACTIVE LEAF
DUMMY LEVER SET ON INACTIVE LEAF
BOTTOM SURFACE FLUSH BOLTS ON INACTIVE LEAF
TOP SURFACE FLUSH BOLTS ON INACTIVE LEAF WITH LONG THROW
KICK PLATE EXTERIOR SIDE
MOP PLATE INTERIOR SIDE
PAIR OF WALL STOPS WITH HOOK AND EYE
ASTRAGAL
SILENCER

HD-3B MULTI- SET UPPER DOORS
PAIR HAS NO LEVER SET
3 BUTTS
BULB WEATHER STRIPPING ALL AROUND
BOTTOM SURFACE FLUSH BOLTS ON BOTH LEAFS
PAIR OF WALL STOPS WITH HOOK AND EYE
ASTRAGAL
BRUSH WEATHERSTRIPPING AROUND BEAM OPENING
SEE DOOR DETAIL SHEETS FOR NEOPRENE GASKET INFO

HD-5 PRIVACY LEVER SET
1 1/2 BUTTS
MOP PLATE BOTH SIDES
OVERHEAD CLOSER
WALL STOP
SILENCER

HD-7 MANUFACTURERS HARDWARE WITH TAMPER PROOF KEY SET
FULLY WATERPROOF GASKET SEAL ALL AROUND

HD-8 MANUFACTURERS HARDWARE

NOTES:
ALL HARDWARE SATIN SS FINISH
PROVIDE KEYBOX IN OFFICE
ALL EXTERIOR DOORS TO BE INSULATED
PROVIDE SWEEPS AT ALL EXTERIOR DOORS
PROVIDE SS DRIP CAP AT ALL EXTERIOR DOORS

DOOR SCHEDULE

DOOR NUMBER	DOOR TYPE	LOCATION: ROOM NUMBER	LOCATION: ROOM NAME	LOCATION: INT/EXT	DOOR: PANEL SIZE: WIDTH	DOOR: PANEL SIZE: HEIGHT	DOOR: PANEL: THICKNESS	DOOR: PANEL: TOTAL PANEL COUNT	DOOR: MAT'L	DOOR: FINISH	DOOR: GLAZING TYPE	FRAME: FRAME TYPE	FRAME: THRESHOLD TYPE	FRAME: GASKET	FIRE RATING	HARDWARE	NOTES
GROUND FLOOR																	
101	FL	101	WC	INT	2' - 8"	6' - 8"	0' - 1 3/4"	1	STEEL		N/A	B		Yes		HD-5	
102A	FL	102	PUMP CONTROL ROOM	EXT	3' - 0"	7' - 0"	0' - 1 3/4"	1	STEEL		N/A	A		Yes		HD-1	
102B	FL	102	PUMP CONTROL ROOM	EXT	3' - 0"	7' - 0"	0' - 1 3/4"	1	STEEL		N/A	A		Yes		HD-1	
102C	FL	102	PUMP CONTROL ROOM	EXT	3' - 0"	7' - 0"	0' - 1 3/4"	4	STEEL		N/A	C		Yes		HD-3A/3B	

WINDOW SCHEDULE

WINDOW NUMBER	WINDOW TYPE	LOCATION: ROOM NUMBER	LOCATION: ROOM NAME	WINDOW: WINDOW SIZE: WIDTH M.O.	WINDOW: WINDOW SIZE: HEIGHT M.O.	FRAME MATERIAL: EXT	FRAME MATERIAL: INT	GLAZING	FINISH: EXT	FINISH: INT	SILL TYPE	HEAD TYPE	JAMB TYPE	NOTES
GROUND FLOOR														
102A	FX-1	102	PUMP CONTROL ROOM	5' - 4"	2' - 8"	AL-1	AL-1	GLX-1	PT-2	PT-2	3/A-27	4/A-27	5/A-27	
102B	FX-1	102	PUMP CONTROL ROOM	5' - 4"	2' - 8"	AL-1	AL-1	GLX-1	PT-2	PT-2	3/A-27	4/A-27	5/A-27	
102C	FX-1	102	PUMP CONTROL ROOM	5' - 4"	2' - 8"	AL-1	AL-1	GLX-1	PT-2	PT-2	3/A-27	4/A-27	5/A-27	
102D	FX-1	102	PUMP CONTROL ROOM	5' - 4"	2' - 8"	AL-1	AL-1	GLX-1	PT-2	PT-2	3/A-27	4/A-27	5/A-27	
102E	FX-1	102	PUMP CONTROL ROOM	5' - 4"	2' - 8"	AL-1	AL-1	GLX-1	PT-2	PT-2	3/A-27	4/A-27	5/A-27	
102F	FX-1	102	PUMP CONTROL ROOM	5' - 4"	2' - 8"	AL-1	AL-1	GLX-1	PT-2	PT-2	3/A-27	4/A-27	5/A-27	

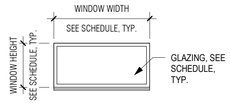

FX-1 - FIXED

WINDOW TYPE

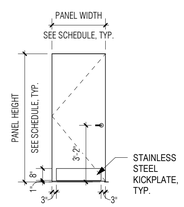

FL - FLUSH

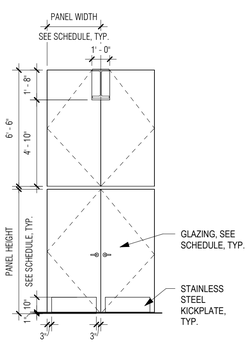

CP - CRANE PANEL

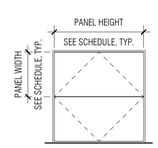

HATCH - ACCESS PANEL

DOOR TYPES

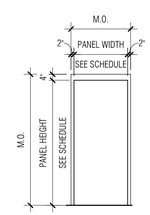

A - TYPICAL CMU DOOR
*SEE A-27 FOR DETAILS, TYP.

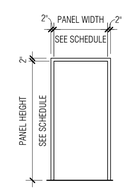

B - TYPICAL LIGHT GAUGE METAL FRAMED DOOR

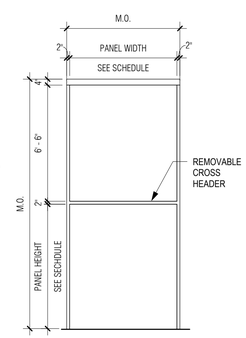

C - GANTRY CRANE ACCESSIBLE

DOOR FRAME TYPES

PREPARED BY:

BETA
www.BETA-Inc.com
PLOT DATE: 8/29/2021 4:00:17 PM

REGISTERED PROFESSIONAL

REGISTERED ARCHITECT
THOMAS D. MAGUIRE JR.
No. 6938
BOSTON
MASS.
COMMONWEALTH OF MASSACHUSETTS

SUBCONSULTANT:

DSK Dewing Schmid Kearns
ARCHITECTS + PLANNERS

30 Monument Square
Suite 200B
Concord, MA
01742
978.371.7500

280 Elm Street
South Dartmouth, MA
02748
508.999.0440

PROJECT

MAIN LIFT PUMP STATION IMPROVEMENTS

TAUNTON, MA

TITLE

DOOR AND WINDOW SCHEDULES

REVISIONS

NO.	DESCRIPTION	DATE

DRAWN BY: TM
DESIGNED BY: DSK
CHECKED BY: MPS
DSK JOB No.: TPS-1795 DATE: 3/31/2022
BETA JOB No.: 5530

SCALE

As indicated

UNLESS OTHERWISE NOTED OR CHANGED BY REPRODUCTION

CONTRACT 2

SHEET NO.

A-24

P:\PROJECTS\1510 NPS - NEWBURYPORT PUMP STATION\600-NPS-DWGS\601-REV\TTFAMILIES\TITLEBLOCKS\KDG_Arch D 24x36 Vertical Title - BETA

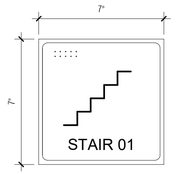

CHARACTER PROPORTIONS WIDTH-TO-HEIGHT RATIO BETWEEN 3:5 TO 1:1
STROKE WIDTH-TO-HEIGHT RATIO BETWEEN 1:5 AND 1:10
FINISH: ADAAG 4.30.5: NON-GLARE
CONTRAST: LIGHT ON DARK
REQUIREMENTS: RAISED LETTERS AND BRAILLE
LOCATION: ON WALL ADJACENT TO LATCH SIDE OF DOOR, 60" A.F.F TO SIGN CENTERLINE.
OBSTACLES: A PERSON MUST BE ABLE TO APPROACH WITHIN 3" OF SIGN WITHOUT ENCOUNTERING PROTRUDING OBJECTS OR STANDING (SITTING) WITHIN SWING OF DOOR

3 TYPICAL STAIR SIGNAGE
3" = 1'-0"

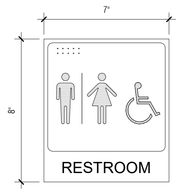

CHARACTER PROPORTIONS WIDTH-TO-HEIGHT RATIO BETWEEN 3:5 TO 1:1
STROKE WIDTH-TO-HEIGHT RATIO BETWEEN 1:5 AND 1:10
FINISH: ADAAG 4.30.5: NON-GLARE
CONTRAST: LIGHT ON DARK
REQUIREMENTS: RAISED LETTERS AND BRAILLE
LOCATION: ON WALL ADJACENT TO LATCH SIDE OF DOOR, 60" A.F.F TO SIGN CENTERLINE.
OBSTACLES: A PERSON MUST BE ABLE TO APPROACH WITHIN 3" OF SIGN WITHOUT ENCOUNTERING PROTRUDING OBJECTS OR STANDING (SITTING) WITHIN SWING OF DOOR
THE RESTROOM SHALL USE THE INTERNATIONAL SYMBOL OF ACCESSIBILITY

2 RESTROOM SIGNAGE
3" = 1'-0"

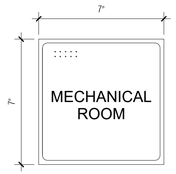

CHARACTER PROPORTIONS WIDTH-TO-HEIGHT RATIO BETWEEN 3:5 TO 1:1
STROKE WIDTH-TO-HEIGHT RATIO BETWEEN 1:5 AND 1:10
FINISH: ADAAG 4.30.5: NON-GLARE
CONTRAST: LIGHT ON DARK
REQUIREMENTS: RAISED LETTERS AND BRAILLE
LOCATION: ON WALL ADJACENT TO LATCH SIDE OF DOOR, 60" A.F.F TO SIGN CENTERLINE.
OBSTACLES: A PERSON MUST BE ABLE TO APPROACH WITHIN 3" OF SIGN WITHOUT ENCOUNTERING PROTRUDING OBJECTS OR STANDING (SITTING) WITHIN SWING OF DOOR

1 TYPICAL ROOM SIGNAGE
3" = 1'-0"

SIGNAGE SCHEDULE

ROOM NO.	DESCRIPTION	QUANTITY
-	STAIRS	3
006	MEZZANINE	1
101	WC	1
102	PUMP CONTROL ROOM	1
EXTERIOR		
-	BUILDING STREET ADDRESS	1
-	BUILDING DEDICATION PLAQUE (BRONZE)	1

Grand total: 6

MATERIAL FINISH LEGEND

CODE	PRODUCT NAME / TYPE	LOCATION	IMAGE	SIZE (HxWxD)	COLOR	PATTERN	TEXTURE / FINISH	MANUFACTURER	NOTES
04210 : CLAY UNIT MASONRY									
BRK-1	BRICK - FACE BRICK	EXTERIOR WALLS		2.25x7.625x3.5	FULL RANGE DANISH	RUNNING BOND	SAND MOLDED FACE BRICK	STILES AND HART	
GR-1	GROUT	USED WITH BRK-1		3/8" JOINTS	WHITE				
04222 : STRUCTURAL UNIT MASONRY									
CMU-1 - Structural CMU	CMU - STRUCTURAL	SEE DRAWINGS		8x16x8 NOMINAL CONCRETE BLOCKS				JANDRIS	
05500 : METAL FABRICATION									
GRT-1	ALUMINUM GRATING	EXTERIOR STAIRS AND LANDING							
05500 : METAL FABRICATIONS									
AL-1	ALUMINUM	STAIRS, RAILINGS AND HATCHES							
06100 : ROUGH CARPENTRY									
PLY	PLYWOOD PANELING	AT ALL WALL-MOUNTED ELEC. PANELS		3/4" THICK					
07130 : SELF-ADHERING SHEET WATERPROOFING									
WP-1	SHEET WATERPROOFING	SEE SPECS							
WP-2	LIQUID APPLIED WATERPROOFING	WET WELL, INTERIOR CONC. SURFACES							
07610 : SHEET METAL ROOFING									
DS-1	DOWNSPOUT TO MATCH RF-1								
RF-1	ALUMINUM GUTTER			SEE DRAWINGS	CLEAR ANODIZED				
08800 : GLAZING									
GLX-1	1" IGU - VISION GLASS	WINDOWS		SEE DOOR AND WINDOW SCHEDULE	TRANSLUCENT	TRANSLUCENT GLAZING, PATTERN TO BE APPROVED BY ARCHITECT			EXTERIOR PANE TO BE LAMINATED
09211 : GYPSUM BOARD ASSEMBLIES									
GWB-1	GYPSUM WALL BOARD			SEE DETAILS					
09653 : RESILIENT WALL BASE AND ACCESSORIES									
RB-1	RESILIENT BASE - COLOR "A"	AT ALL GWB-1 WALLS		4" HEIGHT	CHARCOAL 20	TRADITIONAL TOELESS		JOHNSONITE	
09671 : RESINOUS FLOORING									
SL-1	SEALER - CONCRETE								
09900 : PAINTING AND COATING									
PT-1A	PAINT - ALL GWB-1 WALLS				SIMPLY WHITE OC-117		EGGSHELL	BEN MOORE	
PT-1B	PAINT - ALL EXPOSED STRUCTURE (DRY-FALL)				WHITE				
PT-2	PAINT - DOORS AND WINDOWS AND FRAMES				ARCH. TO COMFIRM				
PT-3	PAINT - BOLLARDS				SAFETY YELLOW				
PT-4	LIQUID APPLIED PROTECTIVE COATING	EXT VERTICAL CONCRETE WALLS		WATER DISPERSED, ACRYLIC, PROTECTIVE, ANTI-CARBONATION COATING	ARCH. TO CONFIRM		670W, OR EQUAL	SIKA	usa.sika.com
12481 : ENTRANCE FLOOR MATS									
CPT-1	CARPET WALK-OFF MAT	ENTRY DOORS			CHARCOAL	BERBER - RB		MATS INC	

NOTE: SEE SPECIFICATIONS FOR MORE DETAILS, TYP.

ROOM FINISH SCHEDULE

Level	ROOM #	ROOM NAME	FLOOR FINISH	BASE FINISH	WALL FINISH NORTH	WALL FINISH EAST	WALL FINISH SOUTH	WALL FINISH WEST	CEILING FINISH
PUMP LEVEL									
PUMP LEVEL	005	WET WELL 4	NA	N/A	N/A	N/A	N/A	N/A	
MEZZANINE LEVEL									
MEZZANINE LEVEL	006	MEZZANINE	SL-1	N/A	N/A	N/A	N/A	N/A	N/A
GROUND FLOOR									
GROUND FLOOR	101	WC	SL-1	RB-1	PT-1A	PT-1A	PT-1A	PT-1A	PT-1A
GROUND FLOOR	102	PUMP CONTROL ROOM	SL-1	RB-1	PT-1A	PT-1A	PT-1A	PT-1A	EXPOSED STRUCTURE
GROUND FLOOR	103	EXTERIOR ENTRY PLATFORM	SL-1	N/A	N/A	N/A	N/A	N/A	N/A
PUMP LEVEL									
PUMP LEVEL	001	PUMP ROOM	SL-1	N/A	N/A	N/A	N/A	N/A	N/A
PUMP LEVEL	002	WET WELL 1	WP-2	N/A	WP-2	WP-2	WP-2	WP-2	WP-2
PUMP LEVEL	003	WET WELL 3	WP-2	N/A	WP-2	WP-2	WP-2	WP-2	WP-2
PUMP LEVEL	004	WET WELL 2	WP-2	N/A	WP-2	WP-2	WP-2	WP-2	WP-2
PUMP LEVEL	006	INFLUENT CHAMBER	WP-2	N/A	WP-2	WP-2	WP-2	WP-2	WP-2

PREPARED BY:

BETA
www.BETA-Inc.com
PLOT DATE: 8/29/2021 4:00:20 PM

REGISTERED PROFESSIONAL

REGISTERED ARCHITECT
THOMAS D. MCGRATH
No. 29336
BOSTON
MASS.
COMMONWEALTH OF MASSACHUSETTS

SUBCONSULTANT:

DSK Dewing Schmid Kearns
ARCHITECTS + PLANNERS

30 Monument Square
Suite 200B
Concord, MA
01742
978.371.7500

280 Elm Street
South Dartmouth, MA
02748
508.999.0440

PROJECT

MAIN LIFT PUMP STATION IMPROVEMENTS

TAUNTON, MA

TITLE

SIGNAGE, ACCESSORIES AND FINISH SCHEDULES

REVISIONS

NO.	DESCRIPTION	DATE

DRAWN BY: TM
DESIGNED BY: DSK
CHECKED BY: MPS
DSK JOB No.: TPS-1795 DATE: 3/31/2022
BETA JOB No.: 5530

SCALE
3" = 1'-0"

UNLESS OTHERWISE NOTED OR CHANGED BY REPRODUCTION

CONTRACT 2

SHEET NO.
A-25

P:\PROJECTS\1510 NPS - NEWBURYPORT PUMP STATION\600-NPS-DWGS\601-REVIT\FAMILIES\TITLEBLOCKS\KDG_Arch D 24x36 Vertical Title - BETA

GENERAL NOTES: DETAILS

1. REFER TO DWG A-01 FOR GENERAL NOTES
2. REFER TO DWG A-02 FOR ABBREVIATIONS, SYMBOLS, MOUNTING HEIGHTS

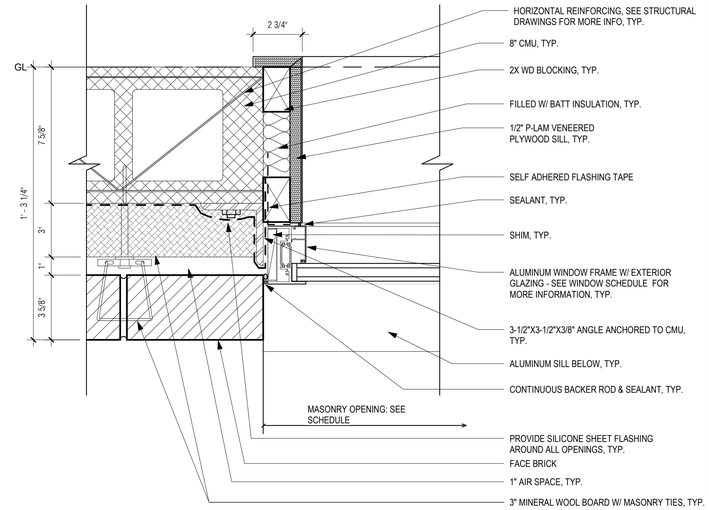

5 TYP. PLAN DETAIL @ WINDOW JAMB
3" = 1'-0"

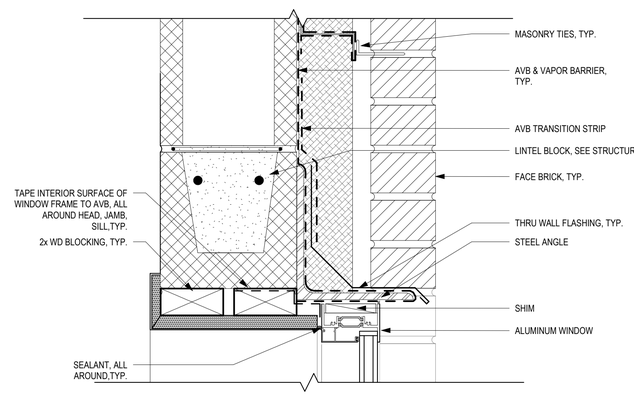

4 TYP. SECTION DETAIL @ WINDOW HEAD
3" = 1'-0"

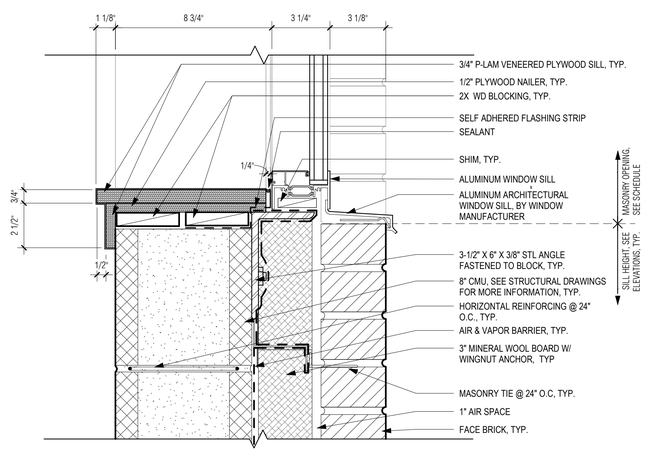

3 TYP. SECTION DETAIL @ WINDOW SILL
3" = 1'-0"

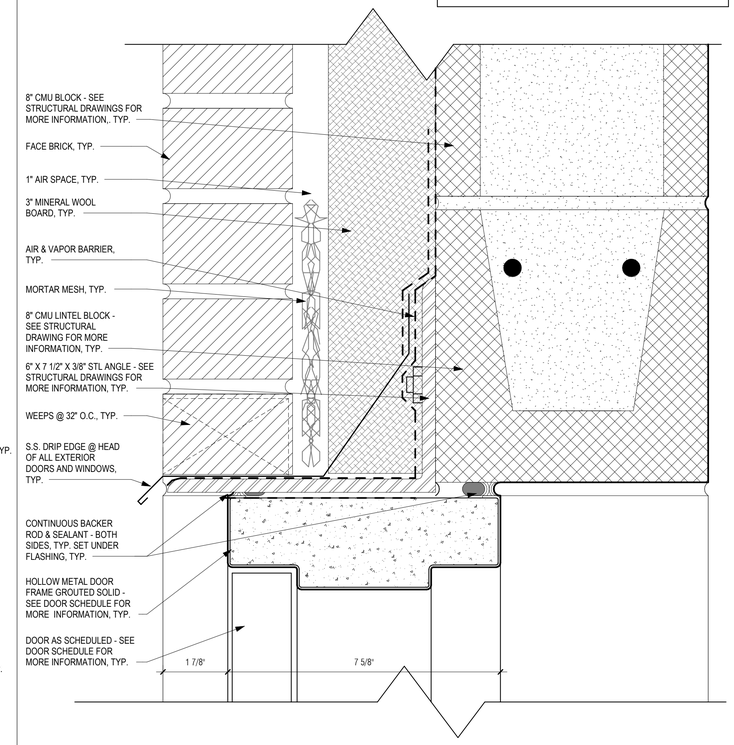

2 TYP. EXT. HOLLOW METAL DOOR W/ CMU HEADER DETAIL - HEAD
6" = 1'-0"

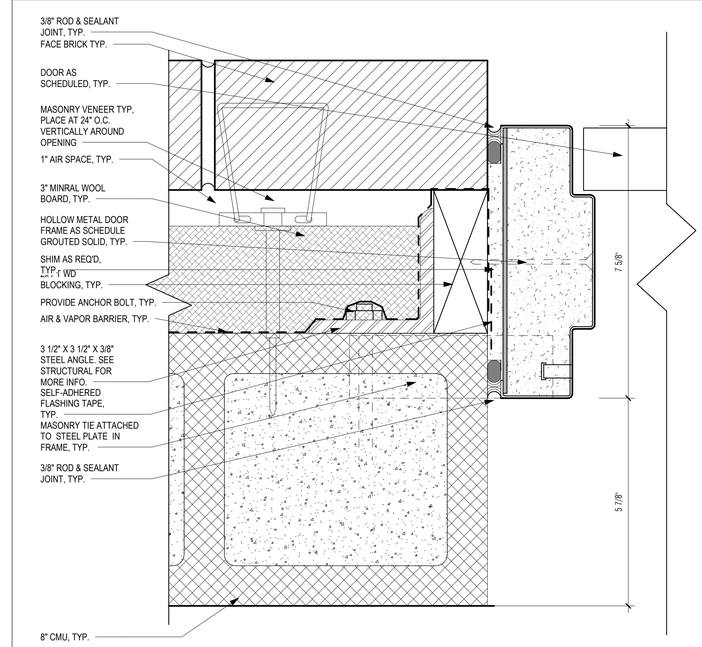

1 TYP. EXT. HOLLOW METAL DOOR W/ CMU HEADER DETAIL - JAMB
6" = 1'-0"

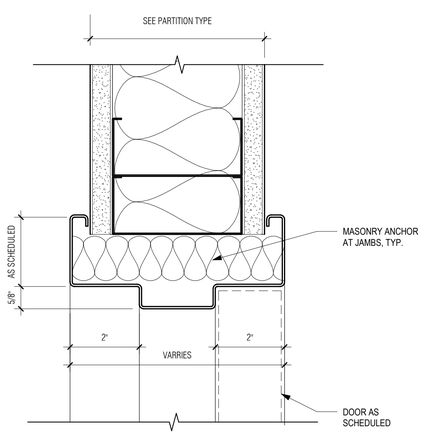

6 TYPICAL HOLLOW METAL DOOR JAMB/HEAD DETAIL AT GWB
6" = 1'-0"

PREPARED BY:

BETA
www.BETA-Inc.com
PLOT DATE: 8/29/2021 4:00:21 PM

REGISTERED PROFESSIONAL

REGISTERED ARCHITECT THOMAS D. MCGRATH 6/29/22 BOSTON MASS. COMMONWEALTH OF MASSACHUSETTS

SUBCONSULTANT:

DSK Dewing Schmid Kearns
ARCHITECTS + PLANNERS

30 Monument Square
Suite 200B
Concord, MA
01742
978.371.7500

280 Elm Street
South Dartmouth, MA
02748
508.999.0440

PROJECT

MAIN LIFT PUMP STATION IMPROVEMENTS

TAUNTON, MA

TITLE

DOOR & WINDOW DETAILS

REVISIONS

NO.	DESCRIPTION	DATE

DRAWN BY:	TM
DESIGNED BY:	DSK
CHECKED BY:	MPS
DSK JOB No.: TPS-1795	DATE: 3/31/2022
BETA JOB No.:	5530

SCALE

As indicated

UNLESS OTHERWISE NOTED OR CHANGED BY REPRODUCTION

CONTRACT 2

SHEET NO.

A-26

P:\PROJECTS/1510 NPS - NEWBURYPORT PUMP STATION\600-NPS-DWGS\601-REV\TTFAMILIES\TITLEBLOCKS\KDG_Arch D 24x36 Vertical Title - BETA

GENERAL NOTES: DETAILS

1. REFER TO DWG A-01 FOR GENERAL NOTES
2. REFER TO DWG A-02 FOR ABBREVIATIONS, SYMBOLS, MOUNTING HEIGHTS

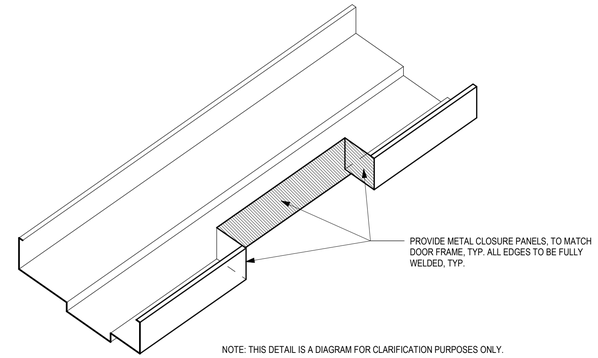

NOTE: THIS DETAIL IS A DIAGRAM FOR CLARIFICATION PURPOSES ONLY.

3 MONORAIL DOOR FRAME DETAIL
3" = 1'-0"

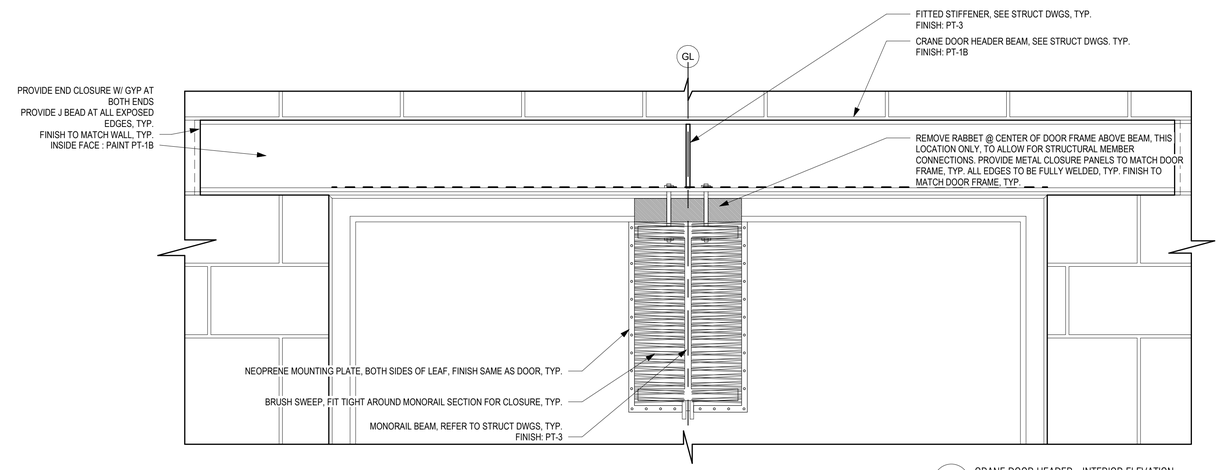

2 CRANE DOOR HEADER - INTERIOR ELEVATION
1 1/2" = 1'-0"

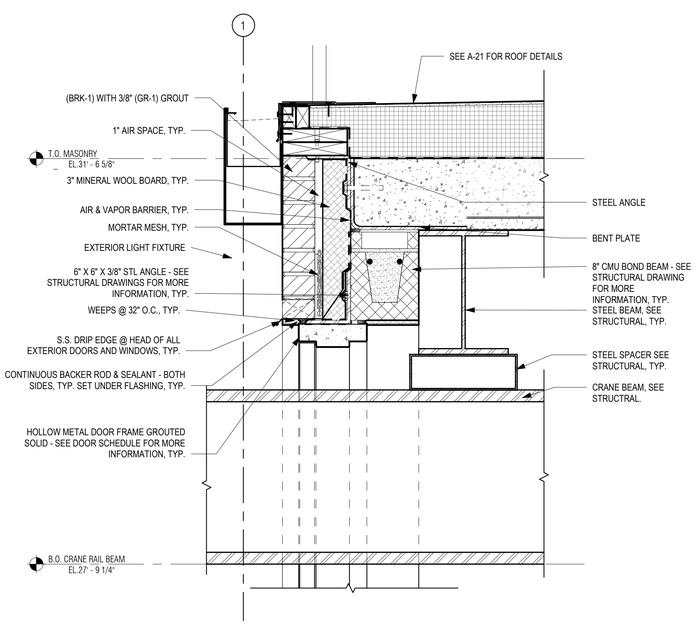

1 TOP OF WALL AT HOIST BEAM
1 1/2" = 1'-0"

PREPARED BY:

BETA
www.BETA-Inc.com
PLOT DATE: 8/29/2021 4:00:22 PM

REGISTERED PROFESSIONAL

REGISTERED ARCHITECT THOMAS D. MAHONEY No. 6938 BOSTON MASS. COMMONWEALTH OF MASSACHUSETTS

SUBCONSULTANT:

DSK Dewing Schmid Kearns
ARCHITECTS + PLANNERS

30 Monument Square
Suite 200B
Concord, MA
01742
978.371.7500

280 Elm Street
South Dartmouth, MA
02748
508.999.0440

PROJECT

MAIN LIFT PUMP STATION IMPROVEMENTS

TAUNTON, MA

TITLE

DOOR DETAILS

REVISIONS

NO.	DESCRIPTION	DATE

DRAWN BY: TM

DESIGNED BY: DSK

CHECKED BY: MPS

DSK JOB No.: TPS-1795 DATE: 3/31/2022

BETA JOB No.: 5530

SCALE

As indicated

UNLESS OTHERWISE NOTED OR CHANGED BY REPRODUCTION

CONTRACT 2

SHEET NO.

A-27

P:\PROJECTS\510 NPS - NEWBURYPORT PUMP STATION\600-NPS-DWGS\601-REVIT\FAMILIES\TITLEBLOCKS\KDG_Arch D 24x36 Vertical Title - BETA

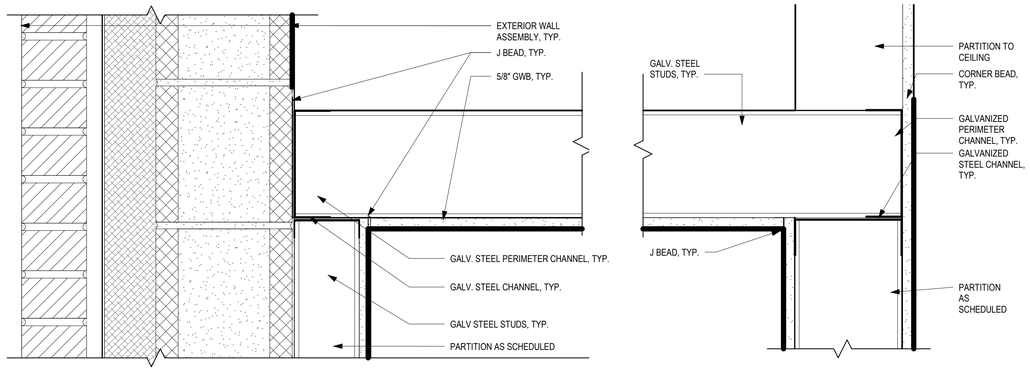

3 DETAIL @ METAL STUD WALL AND CMU TO CEILING
3" = 1'-0"

2 DETAIL @ METAL STUD WALL TO CEILING
3" = 1'-0"

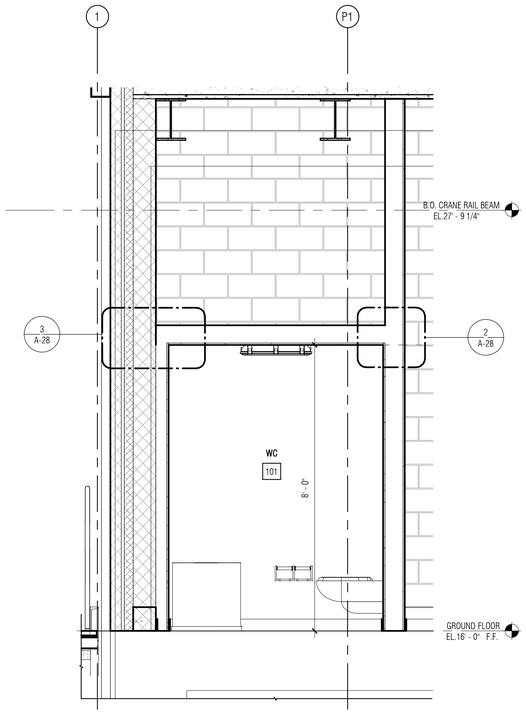

1 SECTION @ RESTROOM
1/2" = 1'-0"

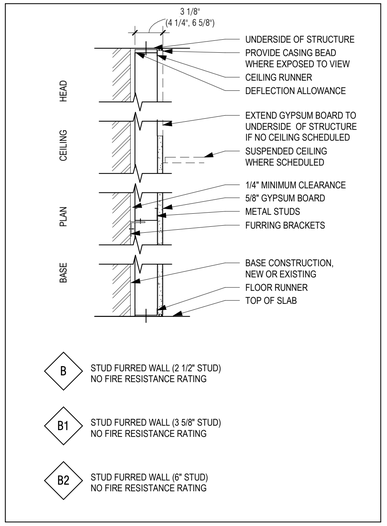

B B - STUD FURRED GWB PARTITION
1 1/2" = 1'-0"

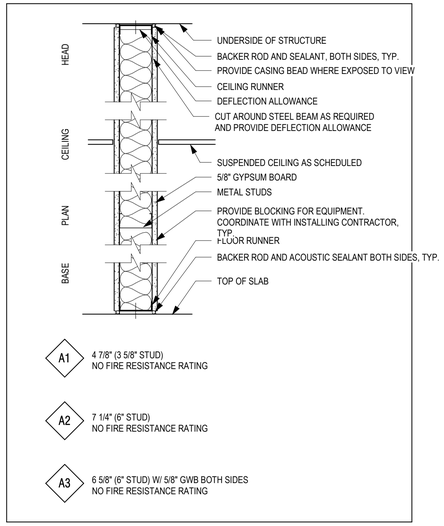

A A - SOUND ATTENUATED GWB PARTITION
1 1/2" = 1'-0"

PREPARED BY:

BETA
www.BETA-Inc.com
PLOT DATE: 8/29/2021 4:00:23 PM

REGISTERED PROFESSIONAL

SUBCONSULTANT:

DSK Dewing Schmid Kearns
ARCHITECTS + PLANNERS

30 Monument Square
Suite 200B
Concord, MA
01742
978.371.7500

280 Elm Street
South Dartmouth, MA
02748
508.999.0440

PROJECT

MAIN LIFT PUMP STATION IMPROVEMENTS

TAUNTON, MA

TITLE

RESTROOM DETAILS AND PARTITION TYPES

REVISIONS

NO.	DESCRIPTION	DATE

DRAWN BY: TM

DESIGNED BY: DSK

CHECKED BY: MPS

DSK JOB No.: TPS-1795 DATE: 3/31/2022

BETA JOB No.: 5530

SCALE

As indicated

UNLESS OTHERWISE NOTED OR CHANGED BY REPRODUCTION

CONTRACT 2

SHEET NO.

A-28

P:\PROJECTS\1510 NPS - NEWBURYPORT PUMP STATION\600-NPS-DWGS\601-REVIT\FAMILIES\TITLEBLOCKS\KDG_Arch D 24x36 Vertical Title - BETA

GENERAL STRUCTURAL NOTES:

1. STRUCTURAL WORK SHALL CONFORM TO THE REQUIREMENTS OF THE COMMONWEALTH OF MASSACHUSETTS STATE BUILDING CODE, 9TH EDITION AND ASCE 7–10 AND ASCE 24 FOR FLOOD HAZARD AREAS.
2. SPECIFICATIONS ARE PART OF THE CONSTRUCTION DOCUMENTS AND MUST BE USED IN CONJUNCTION WITH THE DRAWINGS.
3. VERIFY EXISTING CONDITIONS AND DIMENSIONS PRIOR TO BEGINNING WORK OR FABRICATING MATERIALS. NOTIFY THE ENGINEER OF DISCREPANCIES BEFORE PROCEEDING WITH ANY PHASE OF WORK.
4. THE CONTRACTOR SHALL BE RESPONSIBLE FOR NOTIFYING DIG SAFE PRIOR TO THE START OF ANY EXCAVATION OR SITE WORK.
5. DO NOT SCALE FROM THESE DRAWINGS. REFER TO LABELED DIMENSIONS ONLY.
6. DETAILS LABELED "TYPICAL DETAILS" ON DRAWINGS APPLY TO SITUATIONS OCCURRING ON THE PROJECT THAT ARE THE SAME OR SIMILAR TO THOSE SPECIFICALLY DETAILED. SUCH DETAILS APPLY WHETHER OR NOT DETAILS ARE REFERENCED AT EACH LOCATION. NOTIFY ENGINEER OF CONFLICTS REGARDING APPLICABILITY OF TYPICAL DETAILS.
7. COORDINATE THE WORK OF THESE DRAWINGS WITH OTHER TRADES. DIMENSIONS AND QUANTITIES OF RELATED WORK ARE PROVIDED FOR GENERAL GUIDANCE AND SHALL BE CONFIRMED.
8. DO NOT LOAD THE SLAB ON GRADE OR SUPPORTED SLAB WITH ERECTION CRANES OR ERECTION EQUIPMENT. THE SLABS HAVE NOT BEEN DESIGNED FOR CRANE LOADS AND WILL REQUIRE AN INCREASE IN THICKNESS AND/OR REINFORCEMENT. CONTRACTOR SHALL OBTAIN ENGINEER'S APPROVAL ON PROPOSED CRANE SUPPORT PLAN FOR SLABS PRIOR TO COMMENCING WORK.
9. DO NOT STORE OR STACK CONSTRUCTION MATERIALS ON POURED OR ERECTED FLOORS/ROOFS IN EXCESS OF 80 PERCENT OF LIVE LOAD. GENERAL CONTRACTOR WILL ENSURE THAT ALL SUB–CONTRACTORS ARE INFORMED OF LOADING RESTRICTIONS. AVOID IMPACT WHEN PLACING MATERIALS ON POURED OR ERECTED FLOORS OR ROOFS.
10. THE CONTRACTOR SHALL SHORE, BRACE, SHEETPILE, OR OTHERWISE SUPPORT THE STRUCTURE AS REQUIRED TO MAINTAIN STRUCTURAL INTEGRITY AT ALL TIMES. SHORING DESIGN SHALL BE DESIGNED, ERECTED, SUPPORTED, BRACED, AND MAINTAINED BY THE CONTRACTOR TO SAFELY SUPPORT ALL DEAD LOADS CARRIED BY THE STRUCTURAL WORK BEING SHORED, AND ANY CONSTRUCTION LIVE LOADS.
11. NEW STRUCTURAL SYSTEMS SHALL BE COMPLETELY INSTALLED AND CAPABLE OF SUPPORTING DESIGN LOADS BEFORE SHORES ARE REMOVED. SHORES SHALL BE RELEASED GRADUALLY.
12. THE CONTRACT STRUCTURAL DOCUMENTS REPRESENT THE FINISHED STRUCTURE. THE CONTRACTOR IS RESPONSIBLE FOR THE MEANS AND METHODS OF CONSTRUCTION. PROVIDE ALL MEASURES REQUIRED TO PROTECT THE STRUCTURE, WORKMEN, AND OTHER PERSONS DURING CONSTRUCTION, INCLUDING BRACING, SHORING FOR THE BUILDING, FORMS AND SCAFFOLDING, SHORING OF RETAINING WALLS AND OTHER TEMPORARY SUPPORTS AS REQUIRED. COMPLY WITH APPLICABLE REQUIREMENTS OF OSHA AND OTHER GOVERNING BODIES HAVING JURISDICTION AT THE SITE.
13. BACKFILLING AND COMPACTING ADJACENT TO THE STRUCTURE WALLS SHALL NOT BE PERMITTED UNTIL ALL THE CONCRETE HAS REACHED THE FULL STRUCTURAL CAPACITY.
14. USE OF EXCAVATED MATERIAL SHALL NOT BE PERMITTED FOR USE OF BACKFILLING BETWEEN EXCAVATION SUPPORT AND THE STRUCTURE. BACKFILL SHALL CONSIST OF A CLEAN GRAVEL (SEE SPECIFICATIONS).

DESIGN LOADS:

LIVE LOADS:	
ROOF	20 P.S.F.
SLAB (GROUND LEVEL)	250 P.S.F.
SLAB (MEZZANINE LEVEL)	250 P.S.F.
SNOW LOADS:	
GROUND SNOW LOAD (Pg)	30.0 P.S.F.
FLAT ROOF SNOW LOAD (Pf)	23.1 P.S.F.
WIND LOADS:	
BASIC WIND SPEED	140 MPH
RISK CATEGORY	CATEGORY III
WIND EXPOSURE CATEGORY	CATEGORY III
SEISMIC:	
IMPORTANCE FACTOR (Ie)	1.25 (CATEGORY III)
DESIGN FACTOR Ss	0.182
DESIGN FACTOR S1	0.062
SITE CLASSIFICATION	D
SPECTRAL RESPONSE SDs	0.194
SPECTRAL RESPONSE SD1	0.099
SEISMIC DESIGN CATEGORY	B

FOUNDATIONS:

1. ALL FOOTINGS AND BASE SLABS SHALL BEAR ON NATURALLY DEPOSITED SOILS FOR AN ALLOWABLE BEARING PRESSURE OF 4000 PSF IN ACCORDANCE WITH THE GEOTECHNICAL REPORT DATED AUGUST 2017 BY PAUL B. ALDINGER & ASSOCIATES, INC.
2. SLABS ON GRADE SHALL BE PLACED ON 12 INCHES OF COMPACTED STRUCTURAL FILL.
3. SEE THE SPECIFICATIONS FOR ALL RELATED CONSTRUCTION REQUIREMENTS.
4. ALL UNSUITABLE MATERIAL WITHIN FOUNDATIONS AND SLABS SHALL BE REMOVED AND REPLACED AS DIRECTED BY THE ENGINEER.
5. NO RESPONSIBILITY IS ASSUMED BY THE ENGINEER FOR THE VALIDITY OF THE SUBSURFACE CONDITIONS PRESENTED WITHIN THE CONTRACT DOCUMENTS. SUBSURFACE INVESTIGATIONS REFLECT THE CONDITIONS AT THE TIME THEY WERE PERFORMED. SUPPLEMENTAL INVESTIGATIONS SHALL BE PERFORMED BY THE CONTRACTOR AS REQUIRED TO COMPLETE THE WORK.
6. FOUNDATIONS MAY BE ALTERED TO SUIT EXISTING CONDITIONS AS DIRECTED BY THE ENGINEER.
7. PROVIDE TEMPORARY OR PERMANENT SUPPORTS AS REQUIRED TO PROTECT EXISTING AND NEWLY COMPLETED STRUCTURES AND UTILITIES.
8. CARRY OUT CONTINUOUS CONTROL OF SURFACE AND SUBSURFACE WATER DURING CONSTRUCTION SUCH THAT FOUNDATION WORK IS DONE IN DRY AND ON UNDISTURBED SUB–GRADE MATERIAL.
9. ALL CONCRETE SURFACES SHALL BE FORMED. DO NOT FORM AGAINST EXCAVATIONS WITHOUT PRIOR APPROVAL FROM THE ENGINEER.
10. NO FOUNDATION CONCRETE SHALL BE PLACED ON FROZEN SUB–GRADE MATERIAL.
11. PLACE BACKFILL BEHIND WALLS ON BOTH SIDES SIMULTANEOUSLY.

CONCRETE:

1. CONCRETE WORK SHALL CONFORM TO BUILDING CODE REQUIREMENTS FOR STRUCTURAL CONCRETE (ACI 350) AND SPECIFICATIONS FOR STRUCTURAL CONCRETE FOR BUILDINGS (ACI 301).
2. UNLESS NOTED OTHERWISE, CONCRETE SHALL BE AS FOLLOWS:

		MAX. WATER CEMENT RATIO
ROOF SLAB & COLUMNS:	5000 P.S.I. (NORMAL WEIGHT)	0.40
HOUSEKEEPING:	5000 P.S.I. (NORMAL WEIGHT)	0.40
SLAB–ON–GRADE:	4000 P.S.I. (NORMAL WEIGHT)	0.45
SUPPORT WALLS & GRATING SUPPORT COLUMNS:	4000 P.S.I. (NORMAL WEIGHT)	0.45

3. CONCRETE EXPOSED TO THE WEATHER SHALL BE AIR ENTRAINED.
4. PROVIDE VAPOR BARRIER UNDER INTERIOR SLABS CAST ON GRADE.
5. CONSTRUCTION JOINTS SHOWN ON THE DRAWINGS ARE MANDATORY.
6. SIZE OF CONCRETE PLACEMENTS, UNLESS NOTED OTHERWISE, SHALL CONFORM TO ACI GUIDELINES AND RECOMMENDATIONS.

REINFORCEMENT:

1. REINFORCEMENT SHALL CONFORM TO BUILDING CODE REQUIREMENTS FOR STRUCTURAL CONCRETE (ACI 350), ACI DETAILING MANUAL (SP–66), CRSI MANUAL OF STANDARD PRACTICE (MSP), AND THE STRUCTURAL WELDING CODE–REINFORCING STEEL (AWS D1).
2. STEEL REINFORCEMENT SHALL CONFORM TO ASTM A615 GRADE 60.
3. WELDED WIRE FABRIC SHALL CONFORM TO ASTM A185.
4. PROVIDE SUPPLEMENTAL BARS AND ACCESSORIES AS REQUIRED TO HOLD REINFORCEMENT SECURELY IN POSITION.
5. MINIMUM CONCRETE PROTECTIVE COVER, UNLESS NOTED OTHERWISE, SHALL BE AS FOLLOWS:

FOOTINGS & BASE SLAB – BOTTOMS:	3 INCHES
FOOTINGS & BASE SLAB – SIDES AND TOPS:	2 INCHES
WALLS:	2 INCHES
SLABS ON GRADE:	1 INCH TOP/1½" BOTTOM

6. ALL CONTINUOUS REINFORCEMENT SHALL BE EXTENDED AROUND CORNERS AND LAPPED AT NECESSARY SPLICES OR HOOKED AT DISCONTINUOUS ENDS.
7. LAPS SHALL BE CLASS B TENSION LAP SPLICES, UNLESS NOTED OTHERWISE.
8. REINFORCEMENT SHALL BE CONTINUOUS THROUGH CONSTRUCTION JOINTS.
9. COLUMN DOWELS SHALL BE SET WITH A TEMPLATE AND POSITIONED SO AS TO BE ENCLOSED BY THE COLUMN TIES.
10. WELDED WIRE FABRIC SHALL LAP 8" OR 1–1/2 SPACES, WHICHEVER IS LARGER, AND SHALL BE WIRED TOGETHER.

STRUCTURAL STEEL:

1. WORK SHALL CONFORM TO SPECIFICATION FOR STRUCTURAL STEEL BUILDINGS, CODE OF STANDARD PRACTICE FOR STEEL BUILDINGS AND BRIDGES, AND THE STRUCTURAL WELDING CODE.
2. STRUCTURAL STEEL SHALL BE DETAILED IN ACCORDANCE WITH "DETAILING FOR STEEL CONSTRUCTION" (AISC) AND, WHERE REQUIRED, DESIGNED IN ACCORDANCE WITH THE CITED REFERENCES.
3. STRUCTURAL STEEL SHALL BE NEW STEEL CONFORMING TO THE FOLLOWING:

UNLESS NOTED OTHERWISE:	ASTM A992 GRADE 50 (FY = 50 K.S.I.)
CHANNELS, ANGLES, PLATES:	ASTM A36 (FY = 36 K.S.I.)
HOLLOW STRUCTURAL SECTIONS:	ASTM A500 GRADE B (FY = 40 K.S.I.)
ANCHOR BOLTS:	ASTM F1554
HIGH STRENGTH BOLTS:	ASTM A325

4. BOLTED CONNECTIONS SHALL BE MADE WITH A325–N HIGH STRENGTH BOLTS, DIAMETER AS SHOWN IN RESPECTIVE DETAILS.
5. WELDED CONNECTIONS SHALL BE MADE BY APPROVED CERTIFIED WELDERS USING FILLER METAL CONFORMING TO E70XX.
6. PROVIDE STIFFENERS WHERE SHOWN ON DRAWINGS.
7. PROVIDE TEMPORARY ERECTION BRACING AND SUPPORTS TO HOLD STRUCTURAL STEEL FRAMING SECURELY IN POSITION. SUCH TEMPORARY BRACING AND SUPPORTS SHALL NOT BE REMOVED UNTIL PERMANENT BRACING HAS BEEN INSTALLED AND CONCRETE FOR FLOOR SLABS HAS ATTAINED 75% OF SPECIFIED CONCRETE STRENGTH.
8. FIELD CUTTING OF STRUCTURAL STEEL OR ANY FIELD MODIFICATIONS OF STRUCTURAL STEEL SHALL NOT BE MADE WITHOUT PRIOR WRITTEN APPROVAL.
9. STRUCTURAL STEEL ENCASED IN MASONRY OR CONCRETE SHALL BE COVERED WITH MASTIC.
10. STRUCTURAL STEEL MEMBERS AND CONNECTIONS EXPOSED TO THE WEATHER SHALL BE HOT–DIPPED GALVANIZED.

PREPARED BY

BETA
www.BETA-Inc.com

REGISTERED PROFESSIONAL

SUBCONSULTANT

TODD M. WARZECKI
8/17/20
No. 9414
REGISTERED PROFESSIONAL ENGINEER
CIVIL

PROJECT

Main Lift

Pump Station

Taunton, MA

TITLE

STRUCTURAL NOTES
(1 OF 2)

NO.	REVISIONS	DATE

DRAWN BY:	BWN
DESIGNED BY:	TMW
CHECKED BY:	CWJ
ISSUE DATE:	3/31/2022
BETA JOB NO.:	5530

SCALE

NONE

UNLESS OTHERWISE NOTED OR CHANGED BY REPRODUCTION

SHEET NO.

S-1

8/18/2020 3:42 PM J:\TAUNTON\MAIN LIFT PUMP STATION\AUTOCAD\DRAWINGFILES\STRUCTURAL\PHASE 3\S-15530_SR1.DWG (BETA_STB.BW.STB)

SUBMITTALS, TESTING, AND INSPECTIONS:

1. SUBMITTALS AND TESTING SHALL BE AS REQUIRED BY THE MASSACHUSETTS STATE BUILDING CODE AND THESE FOLLOWING REQUIREMENTS.
2. THE CONTRACTOR SHALL PROVIDE FOR AN INDEPENDENT TESTING AGENCY TO PERFORM REQUIRED TESTING.
3. THE CONTRACTOR SHALL COORDINATE ALL WORK WITH THE TESTING AGENCY AND THE ENGINEERS OF RECORD ACCORDINGLY.
4. NOTIFY THE GEOTECHNICAL ENGINEER OF RECORD PRIOR TO FOUNDATION EXCAVATION.
5. NOTIFY THE STRUCTURAL ENGINEER OF RECORD PRIOR TO FIRST CONCRETE PLACEMENT.
6. SUBMITTALS INCLUDE BUT NOT LIMITED TO:
   DEWATERING
   BORROW MATERIAL
   CONCRETE MIX DESIGN
   STEEL REINFORCING
   ACCESSORIES
   STRUCTURAL STEEL/COLD FORMED METAL
   CONCRETE MASONRY UNITS
   MORTAR AND GROUT
   STEEL JOIST & METAL DECKING
7. TESTS/INSPECTIONS INCLUDES BUT NOT LIMITED TO:
   EARTHWORK
   CONCRETE STRENGTH
   REINFORCING STEEL INSTALLATION
   CONCRETE PLACEMENT AND CURING
   STEEL BOLTING
   MASONRY MATERIAL INSTALLATION
8. THE CONTRACTOR SHALL KEEP COMPLETE AND ORGANIZED RECORDS OF ALL TESTS AND INSPECTIONS AND PROVIDE THEM TO THE ENGINEER SO THAT THE FINAL AFFIDAVIT CAN BE PREPARED. A BINDER SHALL BE MAINTAINED AT THE JOBSITE AT ALL TIMES FOR THE ENGINEER'S INSPECTION.
9. THE CONTRACTOR SHALL NOTIFY THE ENGINEER, IN ADVANCE, BEFORE CONCEALING ANY WORK THAT WILL REQUIRE OBSERVATION NEEDED TO PREPARE THE FINAL AFFIDAVIT.

LIST OF ABBREVIATIONS:

ARCH. – ARCHITECTURAL
ADD'L – ADDITIONAL
APPROX. – APPROXIMATE
BRG. – BEARING
B.O. – BOTTOM OF
C–C – CENTER TO CENTER
℄ – CENTERLINE
C.I.P. – CAST IN PLACE
CONC. – CONCRETE
CONST. – CONSTRUCTION
CONT. – CONTINUOUS
C.Y. – CUBIC YARD
d – DEEP
DET. – DETAIL
DTL. – DETAIL
DIA. – DIAMETER
DWG. – DRAWING
EA. – EACH
EL. – ELEVATION
ELEV. – ELEVATION
EMBED. – EMBEDMENT
E.F. – EACH FACE
E.S. – EACH SIDE
E.W. – EACH WAY
EXIST. – EXISTING
EXP. – EXPANSION
FIN. – FINISH
F.O. – FACE OF
FT. – FEET/FOOT
FTG. – FOOTING
GA. – GAUGE
GALV. – GALVANIZED
GC – GENERAL CONTRACTOR
h – HIGH
HORIZ. – HORIZONTAL
H.A. – HIGH POINT
I.F. – INSIDE FACE
IN. – INCH
I.D. – INSIDE DIAMETER
INFO. – INFORMATION
INV. – INVERT
JT. – JOINT
K.S.I. – KIPS PER SQUARE INCH
LG. – LONG
(LLH) – LONG LEG HORIZONTAL
(LLV) – LONG LEG VERTICAL
LOC.'S – LOCATIONS
MAX. – MAXIMUM
MIN. – MINIMUM
MISC. – MISCELLANEOUS
N.F. – NEAR FACE
N.S. – NEAR SIDE
N.T.S. – NOT TO SCALE
NO. – NUMBER
O.C. – ON CENTER
O.D. – OUTSIDE DIAMETER
O.F. – OUTSIDE FACE
PERIM. – PERIMETER
PL – PLATE
PVC – POLYVINYL CHLORIDE
P.S.F. – POUNDS PER SQUARE FOOT
P.S.I. – POUNDS PER SQUARE INCH
RAD. – RADIUS
REINF. – REINFORCING
REQ'D – REQUIRED
SECT. – SECTION
SCH. – SCHEDULE
S.F. – SQUARE FOOT
SHT. – SHEET
SIM. – SIMILAR
SP. – SPACES
S.S. – STAINLESS STEEL
STD. – STANDARD
STL. – STEEL
SYM. – SYMMETRIC
t – THICK
T&B – TOP AND BOTTOM
T.O. – TOP OF
TO.S. – TOP OF SLAB
T.O.W. – TOP OF WALL
TYP. – TYPICAL
U.N.O. – UNLESS NOTED OTHERWISE
VERT. – VERTICAL
W.W.F. – WELDED WIRE FABRIC
w – WIDE
w/ – WITH
ø – DIAMETER

SECTION AND DETAIL DESIGNATIONS:

SECTION CUT SYMBOL:

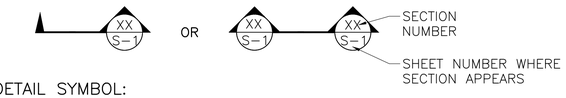

DETAIL SYMBOL:

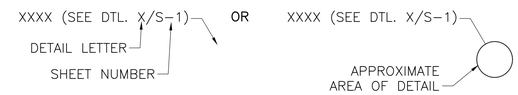

EXISTING HATCH SCHEDULE:

DOOR NUMBER	DOOR TYPE	LOCATION		DOOR							FRAME			FIRE RATING	HARDWARE	NOTES
		ROOM NAME	INT/EXT	WIDTH	LENGTH	PANEL THICKNESS	TOTAL PANEL COUNT	MAT'L	FINISH	GLAZING TYPE	FRAME TYPE	THRESHOLD TYPE	GASKET			
H–1	HATCH	PUMP CONTROL ROOM	INT	5'–0"	5'–0"	0'–1⅛"	2	AL–1		N/A	F		YES		HD–8	
H–2	HATCH	PUMP CONTROL ROOM	INT	5'–0"	5'–0"	0'–1⅛"	2	AL–1		N/A	F		YES		HD–8	
H–3	HATCH	EXTERIOR ENTRY PLATFORM	EXT	4'–0"	4'–0"	0'–1⅛"	2	AL–1		N/A	F		YES		HD–7	
H–4	HATCH	EXTERIOR ENTRY PLATFORM	EXT	4'–0"	4'–0"	0'–1⅛"	2	AL–1		N/A	F		YES		HD–7	
H–5	HATCH	EXTERIOR ENTRY PLATFORM	EXT	4'–0"	4'–0"	0'–1⅛"	2	AL–1		N/A	F		YES		HD–7	
H–6	HATCH	EXTERIOR ENTRY PLATFORM	EXT	3'–6"	3'–6"	0'–1⅛"	1	AL–1		N/A	F		YES		HD–7	

HD–7 MANUFACTURERS HARDWARE WITH TAMPER PROOF KEY SET FULLY WATERPROOF GASKET SEAL ALL AROUND
HD–8 MANUFACTURERS HARDWARE

EXISTING CONCRETE PENETRATION SCHEDULE: [REFERENCE CONTRACT DOCUMENTS MAIN LIFT PUMP STATION FOUNDATION FOR INFORMATION NOT SHOWN IN THESE DRAWINGS]

PENETRATION NUMBER	PENETRATION TYPE	PENETRATION LOCATION	CENTERLINE ELEVATION	PIPE DESCRIPTION	PIPE MATERIAL	NOMINAL PIPE SIZE (IN)	PENETRATION SIZE (IN)
P–1	FLUSH FLANGE x FLUSH FLANGE WALL PIPE	PUMP ROOM SEPARATING WALL	–18.63	PUMP SUCTION	DUCTILE IRON	18	N/A
P–2	FLUSH FLANGE x FLUSH FLANGE WALL PIPE	PUMP ROOM SEPARATING WALL	–18.63	PUMP SUCTION	DUCTILE IRON	18	N/A
P–3	FLUSH FLANGE x FLUSH FLANGE WALL PIPE	PUMP ROOM SEPARATING WALL	–18.63	PUMP SUCTION	DUCTILE IRON	18	N/A
P–4	FLUSH FLANGE x FLUSH FLANGE WALL PIPE	PUMP ROOM SEPARATING WALL	–18.63	PUMP SUCTION	DUCTILE IRON	18	N/A
P–5	FLUSH FLANGE x FLUSH FLANGE WALL PIPE	PUMP ROOM SEPARATING WALL	–18.63	PUMP SUCTION	DUCTILE IRON	18	N/A
P–6	WALL SLEEVE	INFLUENT CHAMBER	–2.05	INFLUENT SEWER	GALVANIZED STEEL	48	56
P–7	WALL SLEEVE	INFLUENT CHAMBER	–10.28	SIPHON DISCHARGE	GALVANIZED STEEL	24	28
P–8	WALL SLEEVE	INFLUENT CHAMBER	–2.00	SIPHON DISCHARGE	GALVANIZED STEEL	24	28
P–9	FLUSH FLANGE x MJ WALL PIPE	WEST PUMP ROOM WALL	–6.70	PUMP DISCHARGE HEADER	DUCTILE IRON	20	N/A
P–10	FLUSH FLANGE x MJ WALL PIPE	WEST MEZZANINE WALL	0.19	PUMP DISCHARGE HEADER	DUCTILE IRON	20	N/A
P–11	FLUSH FLANGE x FLUSH FLANGE WALL PIPE	PUMP ROOM SEPARATING WALL	–7.65	FORCE MAIN DRAIN	DUCTILE IRON	8	12
P–12	WALL SLEEVE	MEZZANINE SEPARATING WALL	11.50	SUMP PUMP	GALVANIZED STEEL	1½	3½"
P–13	WALL SLEEVE	MEZZANINE SEPARATING WALL	11.50	SUMP PUMP	GALVANIZED STEEL	1½	3½"
P–14	WALL SLEEVE	WET WELL–3	–2.00	OVERFLOW PIPE	GALVANIZED STEEL	24	28
P–15	PENETRATION	INFLUENT CHAMBER	12.66	VENTILATION	FORMED CONCRETE	16	N/A

PREPARED BY
BETA
www.BETA-Inc.com

REGISTERED PROFESSIONAL

SUBCONSULTANT
TODD M. WARZECKI
No. 9414
REGISTERED PROFESSIONAL ENGINEER CIVIL

PROJECT
Main Lift
Pump Station
Taunton, MA

TITLE
STRUCTURAL NOTES (2 OF 2)

NO.	REVISIONS	DATE

DRAWN BY: BWN
DESIGNED BY: TMW
CHECKED BY: CWJ
ISSUE DATE: 3/31/2022
BETA JOB NO.: 5530

SCALE
NONE
UNLESS OTHERWISE NOTED OR CHANGED BY REPRODUCTION

SHEET NO.
S-2

8/18/2020 3:42 PM J:\TAUNTON\MAIN LIFT PUMP STATION\AUTOCAD\DRAWINGFILES\STRUCTURAL\PHASE 3\S-2\5530_SR2.DWG (BETA STB BW.STB)

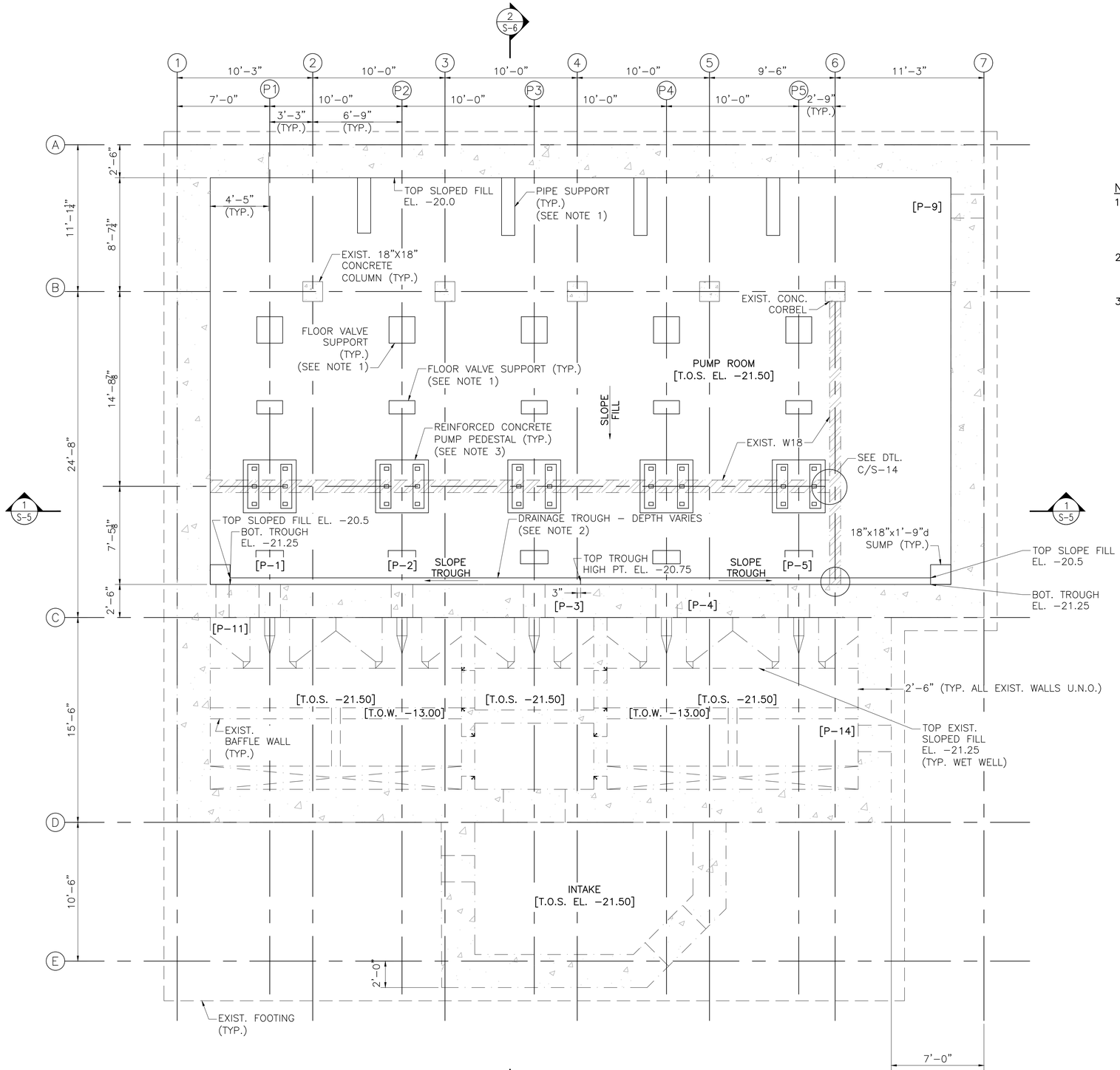

[PLAN @ ELEV. -21.50]

PUMP ROOM PLAN

SCALE: ¼" = 1'-0"

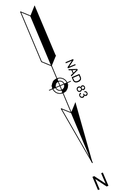

NOTES:

1. PIPE AND FLOOR VALVE SUPPORT LOCATIONS ARE APPROXIMATE. SEE MECHANICAL DRAWINGS FOR PIPE SUPPORT DETAILS AND NOTES.
2. SEE SHEET A-05 AND S-6 FOR ADDITIONAL SLOPED FILL AND DRAINAGE TROUGH ELEVATIONS.
3. CONCRETE PUMP PEDESTALS SHOWN ARE FOR CONCEPTUAL PURPOSES. PEDESTAL SIZE, CONFIGURATION, AND ANCHORAGE TO BE SUPPLIED BY PUMP MANUFACTURER.

PREPARED BY

BETA
www.BETA-Inc.com

REGISTERED PROFESSIONAL

SUBCONSULTANT

TODD M. WARZECKI
8/17/20
No. 9414
REGISTERED
PROFESSIONAL ENGINEER
CIVIL

PROJECT

Main Lift

Pump Station

Taunton, MA

TITLE

EXISTING PUMP ROOM PLAN

NO.	REVISIONS	DATE

DRAWN BY:	BWN
DESIGNED BY:	TMW
CHECKED BY:	CWJ
ISSUE DATE:	3/31/2022
BETA JOB NO.:	5530

SCALE

AS SHOWN

UNLESS OTHERWISE NOTED OR CHANGED BY REPRODUCTION

SHEET NO.

S-3

8/18/2020 3:42 PM J:\TAUNTON\MAIN LIFT PUMP STATION\AUTOCAD\DRAWINGFILES\STRUCTURAL\PHASE 3\S-2\A5530_SR2A.DWG (BETA STB BW.STB)

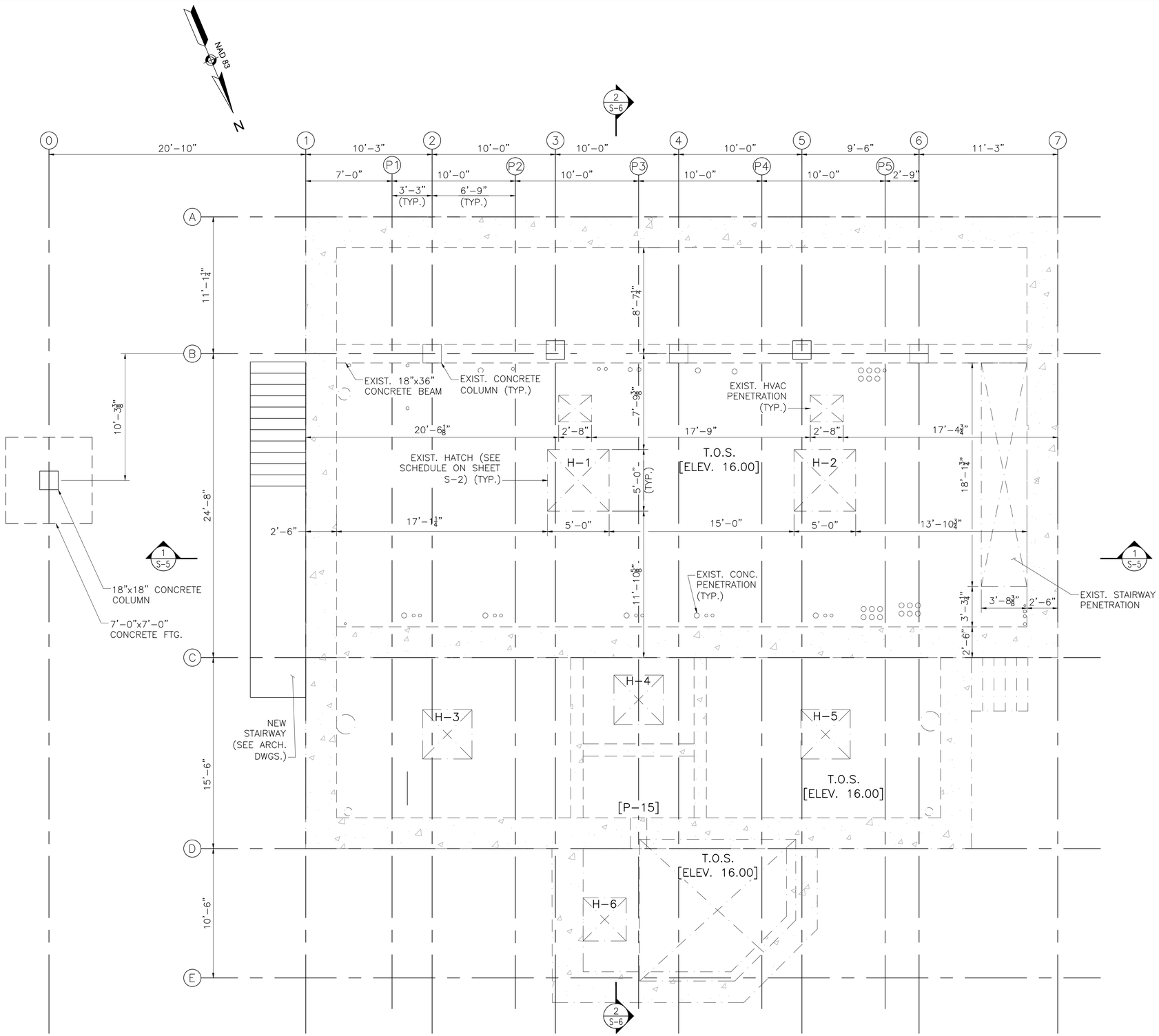

[PLAN @ ELEV. 16.00]

EXISTING GROUND FLOOR PLAN

SCALE: 1/4" = 1'-0"

PREPARED BY

BETA
www.BETA-Inc.com

REGISTERED PROFESSIONAL

SUBCONSULTANT

TODD M. WARZECKI
8/17/20
No. 9414
REGISTERED PROFESSIONAL ENGINEER CIVIL

PROJECT

Main Lift

Pump Station

Taunton, MA

TITLE

EXISTING GROUND FLOOR PLAN

NO.	REVISIONS	DATE

DRAWN BY:	BWN
DESIGNED BY:	TMW
CHECKED BY:	CWJ
ISSUE DATE:	3/31/2022
BETA JOB NO.:	5530

SCALE

AS SHOWN

UNLESS OTHERWISE NOTED OR CHANGED BY REPRODUCTION

SHEET NO. S-4

8/18/2020 3:43 PM J:\TAUNTON\MAIN LIFT PUMP STATION\AUTOCAD\DRAWINGFILES\STRUCTURAL\PHASE 3\S-3\5530_SR3.DWG (BETA STB BW.STB)

NOTES:

1. SEE CONTROL BUILDING SECTIONS ON SHEET S–10.
2. CONCRETE PUMP PEDESTALS SHOWN ARE FOR CONCEPTUAL PURPOSES. PEDESTAL SIZE, CONFIGURATION, AND ANCHORAGE TO BE SUPPLIED BY PUMP MANUFACTURER.
3. ROOF SLAB REINFORCEMENT NOT SHOWN FOR CLARITY.
4. SEE SHEET S–10 FOR ROOF SLAB REINFORCEMENT.

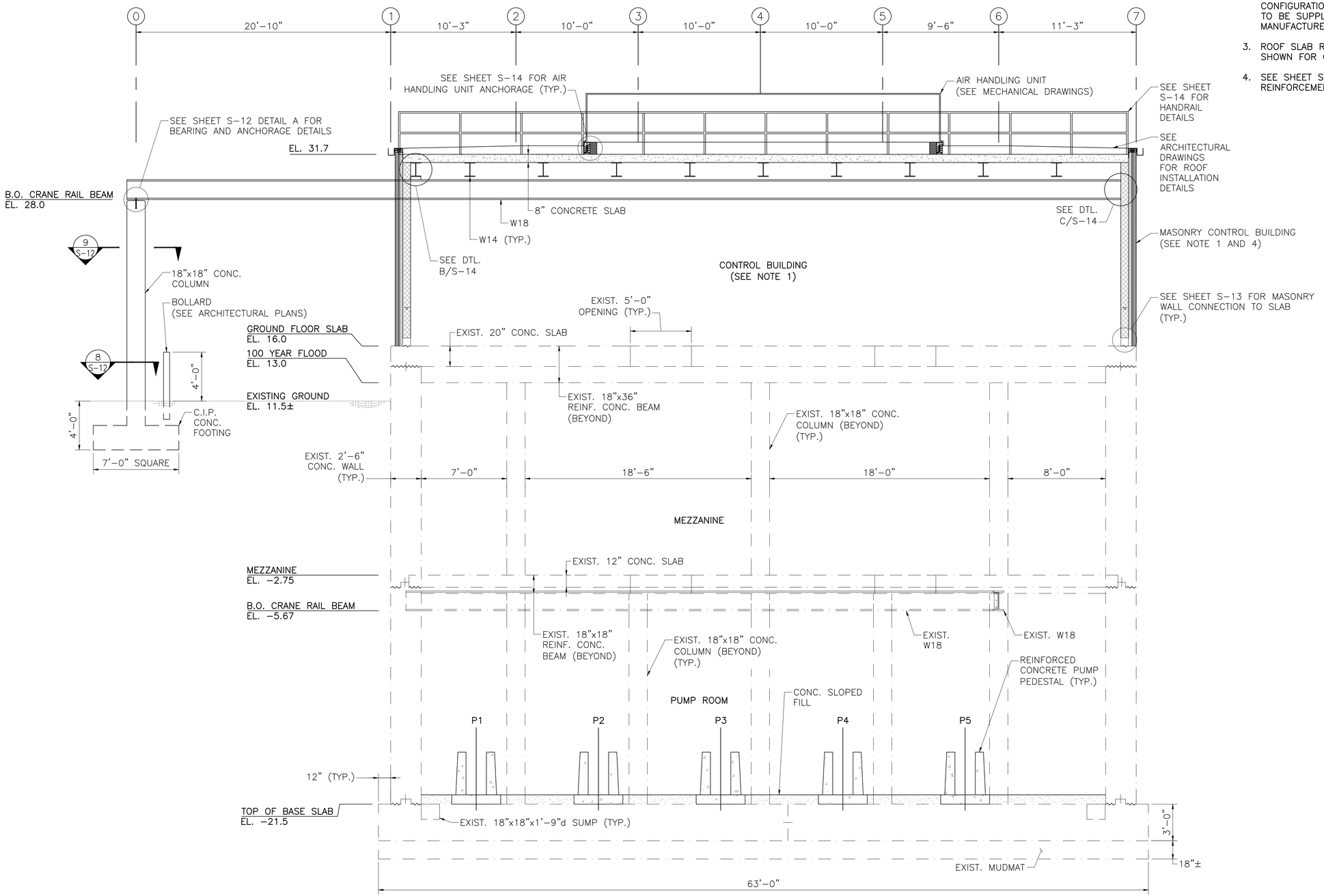

SECTION 1

SCALE: $\frac{1}{4}$" = 1'–0"

PREPARED BY

BETA
www.BETA-Inc.com

REGISTERED PROFESSIONAL

SUBCONSULTANT

TODD M. WARZECKI
No. 9414
REGISTERED PROFESSIONAL ENGINEER CIVIL

PROJECT

Main Lift

Pump Station

Taunton, MA

TITLE

BUILDING SECTIONS (1 OF 2)

NO.	REVISIONS	DATE

DRAWN BY:	BWN
DESIGNED BY:	TMW
CHECKED BY:	CWJ
ISSUE DATE:	3/31/2022
BETA JOB NO.:	5530

SCALE

AS SHOWN

UNLESS OTHERWISE NOTED OR CHANGED BY REPRODUCTION

SHEET NO.

S-5

8/18/2020 3:43 PM J:\TAUNTON\MAIN LIFT PUMP STATION\AUTOCAD\DRAWINGFILES\STRUCTURAL\PHASE 3\S-45530_SR4.DWG (BETA STB BW.STB)

NOTES:

1. SEE CONTROL BUILDING SECTIONS ON SHEET S–10.
2. CONCRETE PUMP PEDESTALS SHOWN ARE FOR CONCEPTUAL PURPOSES. PEDESTAL SIZE, CONFIGURATION, AND ANCHORAGE TO BE SUPPLIED BY PUMP MANUFACTURER.
3. ROOF SLAB REINFORCEMENT NOT SHOWN FOR CLARITY.
4. SEE SHEET S–10 FOR ROOF SLAB REINFORCEMENT.
5. PIPE SUPPORT LOCATIONS ARE APPROXIMATE. SEE MECHANICAL DRAWINGS FOR PIPE SUPPORT DETAILS AND NOTES.

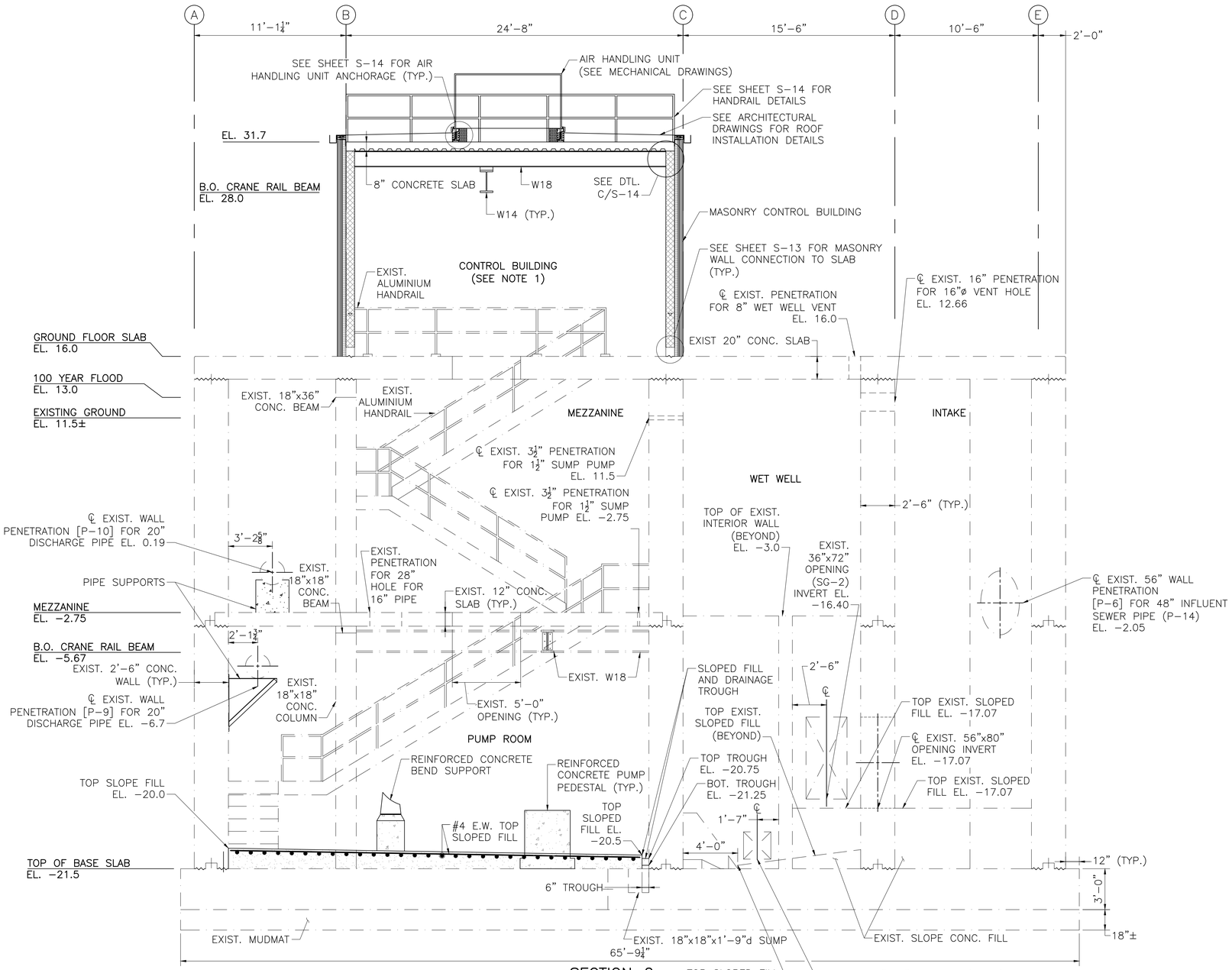

SECTION 2
SCALE: ¼" = 1'–0"

PREPARED BY

BETA
www.BETA-Inc.com

REGISTERED PROFESSIONAL

SUBCONSULTANT

TODD M. WARZECKI
8/17/20
No. 9414
REGISTERED PROFESSIONAL ENGINEER CIVIL

PROJECT

Main Lift

Pump Station

Taunton, MA

TITLE

BUILDING SECTION (2 OF 2)

NO.	REVISIONS	DATE

DRAWN BY:	BWN
DESIGNED BY:	TMW
CHECKED BY:	CWJ
ISSUE DATE:	3/31/2022
BETA JOB NO.:	5530

SCALE

AS SHOWN

UNLESS OTHERWISE NOTED OR CHANGED BY REPRODUCTION

SHEET NO.

S-6

8/18/2020 3:44 PM J:\TAUNTON\MAIN LIFT PUMP STATION\AUTOCAD\DRAWINGFILES\STRUCTURAL\PHASE 3\S-5\5530_SR5.DWG (BETA STB BW.STB)

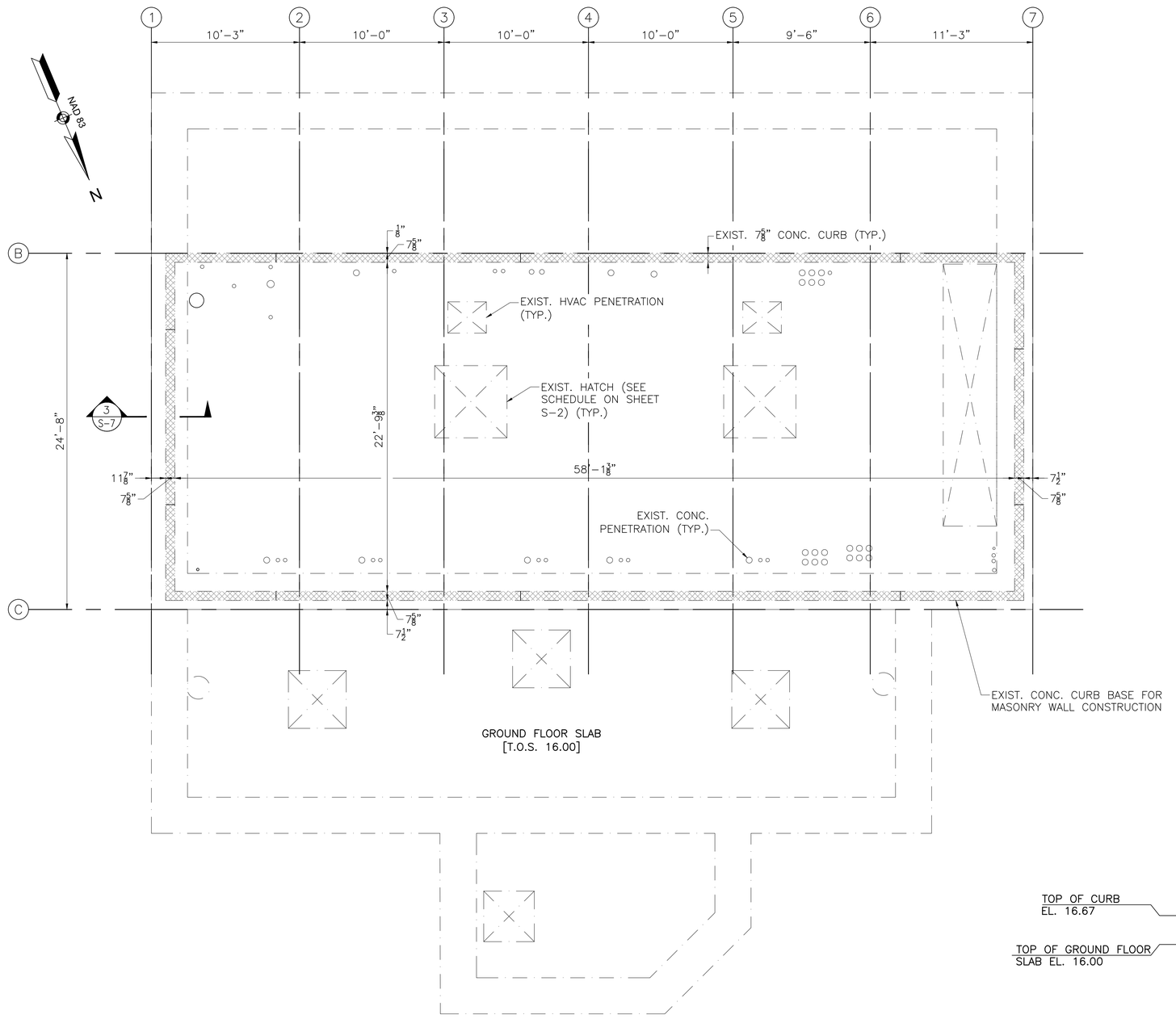

MASONRY WALL CONNECTION PLAN

SCALE: 1/4" = 1'-0"

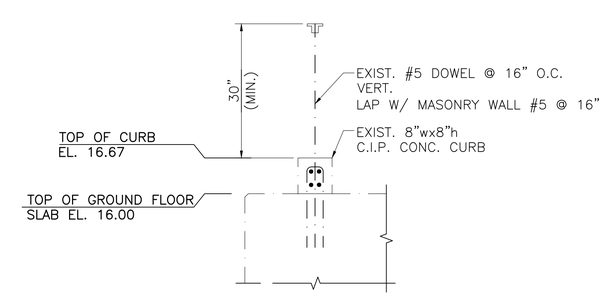

SECTION 3

SCALE: 3/4" = 1'-0"

PREPARED BY

BETA

www.BETA-Inc.com

REGISTERED PROFESSIONAL

SUBCONSULTANT

TODD M. WARZECKI
8/17/20
No. 9414
REGISTERED PROFESSIONAL ENGINEER CIVIL

PROJECT

Main Lift

Pump Station

Taunton, MA

TITLE

CONTROL BUILDING EXISTING BASE PLAN

NO.	REVISIONS	DATE

DRAWN BY:	BWN
DESIGNED BY:	TMW
CHECKED BY:	CWJ
ISSUE DATE:	3/31/2022
BETA JOB NO.:	5530

SCALE

AS SHOWN

UNLESS OTHERWISE NOTED OR CHANGED BY REPRODUCTION

SHEET NO.

S-7

8/18/2020 3:45 PM J:\TAUNTON\MAIN LIFT PUMP STATION\AUTOCAD\DRAWINGFILES\STRUCTURAL\PHASE 3\S-6\5530_SR6.DWG (BETA STB BW.STB)

NOTES:

1. SEE ARCHITECTURAL DRAWINGS FOR LOCATIONS OF DOOR OPENINGS AND WINDOWS.
2. LOCATION OF CMU CONTROL JOINTS SHOWN IS RECOMMENDED. CONTROL JOINTS SHALL BE IN ACCORDANCE WITH NCMA TEK 10–2C – CONTROL JOINTS FOR CONCRETE MASONRY WALLS.
3. CMU CONTROL JOINTS SHALL BE COORDINATED WITH MASON AND BRICK CONTROL JOINTS. ADEQUATE SPACING SHALL BE PROVIDED BETWEEN CMU AND BRICK CONTROL JOINTS.
4. CMU CONTROL JOINTS SHALL HAVE A MAXIMUM SPACING OF 25'–0".

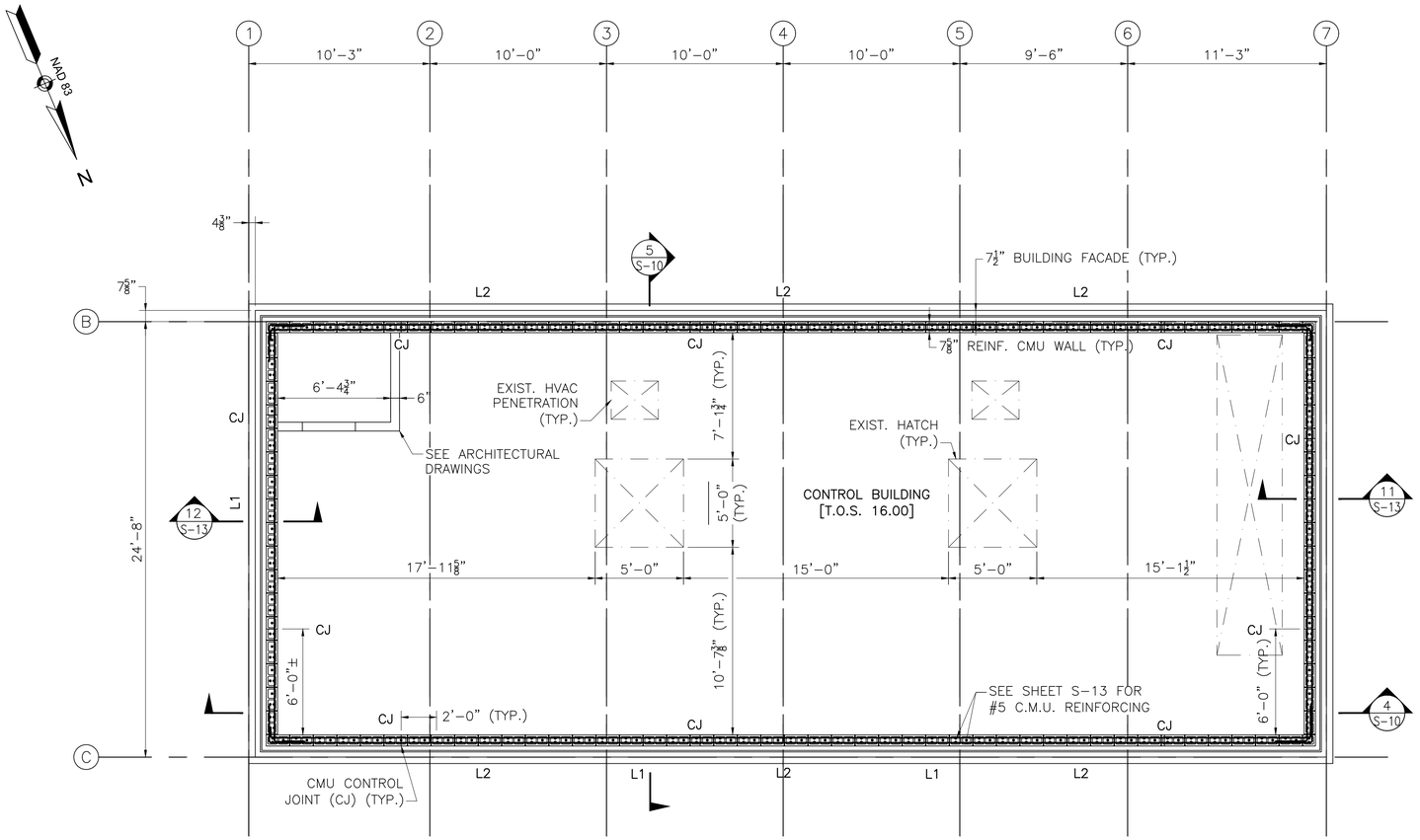

[PLAN @ ELEV. 16.00]

CONTROL BUILDING PLAN

SCALE: 1/4" = 1'–0"

PREPARED BY

BETA
www.BETA-Inc.com

REGISTERED PROFESSIONAL

SUBCONSULTANT

TODD M. WARZECKI
8/17/20
No. 9414
REGISTERED PROFESSIONAL ENGINEER CIVIL

PROJECT

Main Lift

Pump Station

Taunton, MA

TITLE

CONTROL BUILDING PLAN

NO.	REVISIONS	DATE

DRAWN BY:	BWN
DESIGNED BY:	TMW
CHECKED BY:	CWJ
ISSUE DATE:	3/31/2022
BETA JOB NO.:	5530

SCALE

AS SHOWN

UNLESS OTHERWISE NOTED OR CHANGED BY REPRODUCTION

SHEET NO.

S-8

8/18/2020 3:45 PM J:\TAUNTON\MAIN LIFT PUMP STATION\AUTOCAD\DRAWINGFILES\STRUCTURAL\PHASE 3\S-75530_SR7.DWG (BETA STB BW.STB)

FRAMING PLAN NOTES:

1. RJ = W14x61 (ROOF JOIST)
   HB = W18x143 (HOIST BEAM)
2. HOLES SMALLER THAN 12" ARE NOT SHOWN FOR CLARITY. COORDINATE WITH EQUIPMENT MANUFACTURERS AND OTHER DISCIPLINES FOR LOCATIONS.

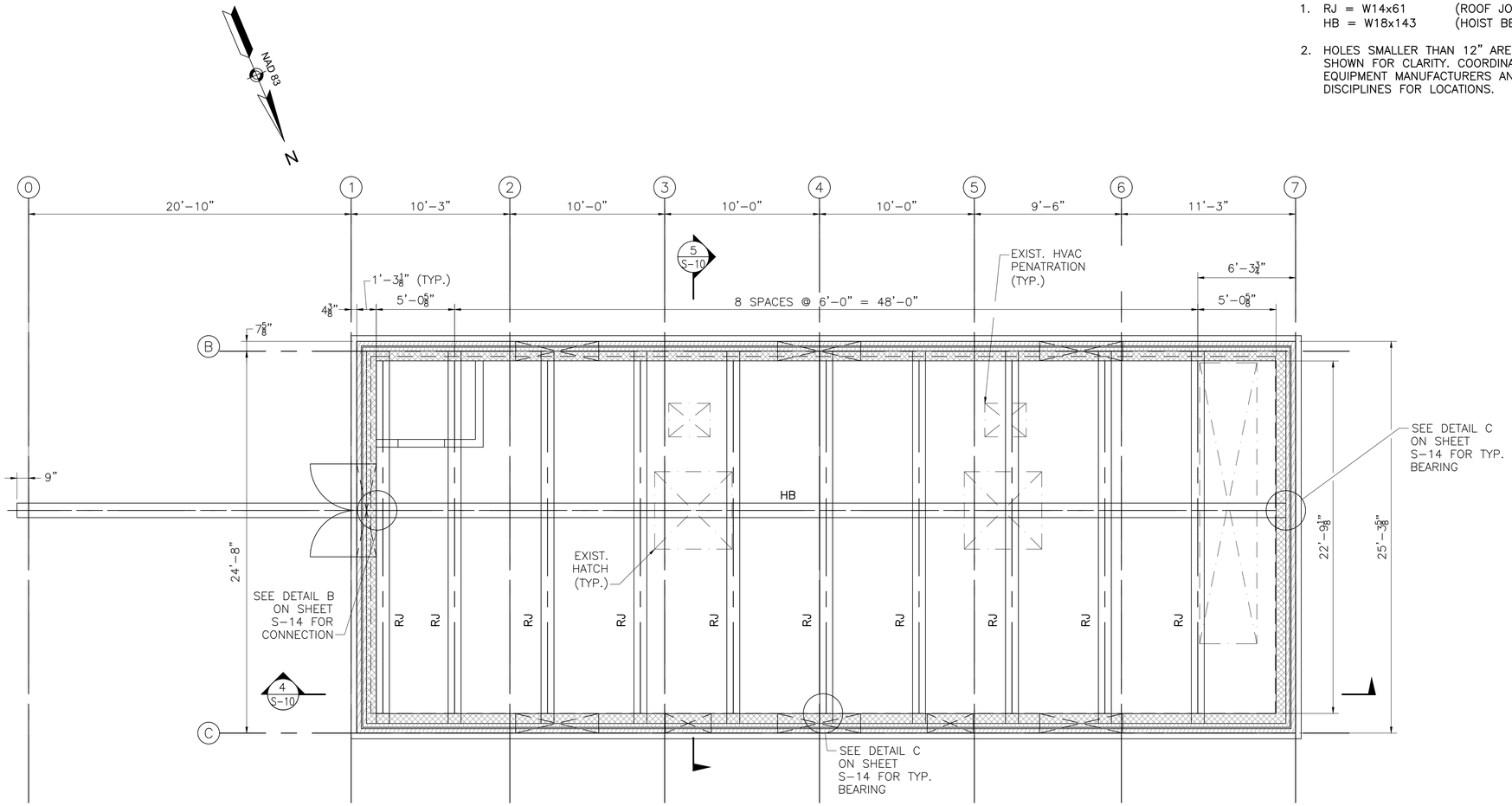

CONTROL ROOM ROOF FRAMING PLAN

SCALE: 1/4" = 1'-0"

PREPARED BY

BETA
www.BETA-Inc.com

REGISTERED PROFESSIONAL

SUBCONSULTANT

TODD M. WARZECKI
8/17/20
No. 9414
REGISTERED PROFESSIONAL ENGINEER CIVIL

PROJECT

Main Lift

Pump Station

Taunton, MA

TITLE

CONTROL BUILDING ROOF FRAMING PLAN

NO.	REVISIONS	DATE

DRAWN BY:	BWN
DESIGNED BY:	TMW
CHECKED BY:	CWJ
ISSUE DATE:	3/31/2022
BETA JOB NO.:	5530

SCALE

AS SHOWN

UNLESS OTHERWISE NOTED OR CHANGED BY REPRODUCTION

SHEET NO. S-9

8/18/2020 3:45 PM J:\TAUNTON\MAIN LIFT PUMP STATION\AUTOCAD\DRAWINGFILES\STRUCTURAL\PHASE 3\S-8\5530_SR8.DWG (BETA STB.BW.STB)

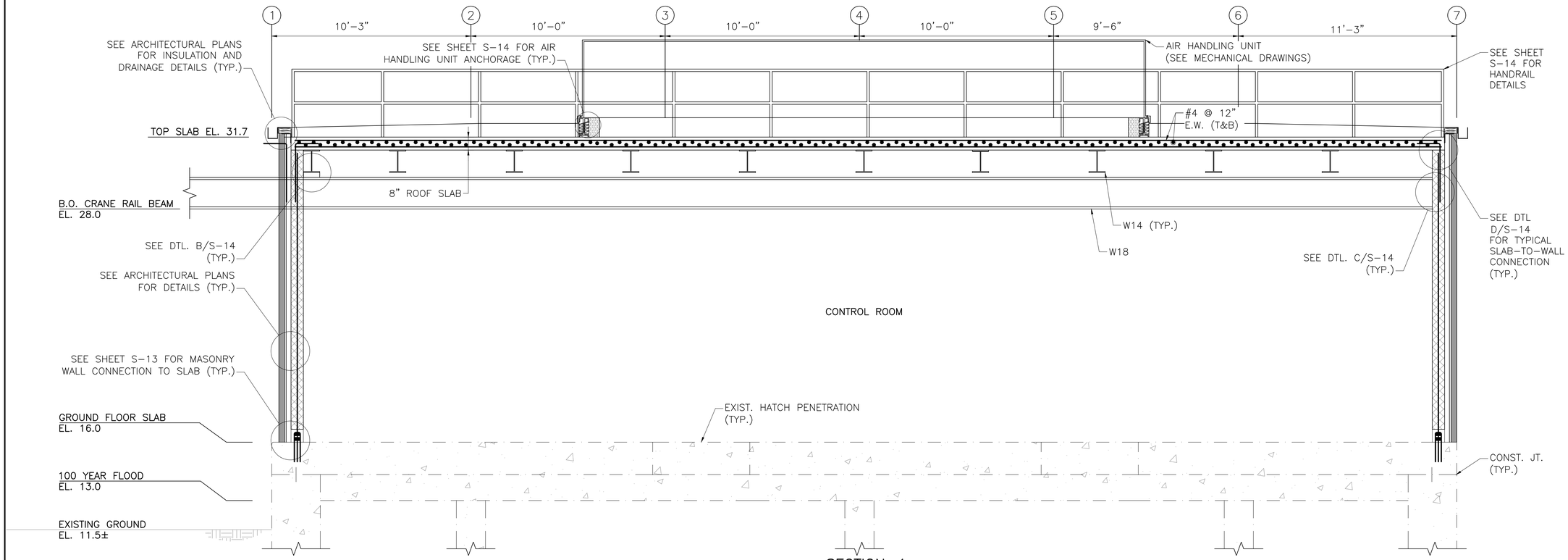

SECTION 4

SCALE: $\frac{3}{8}$" = 1'-0"

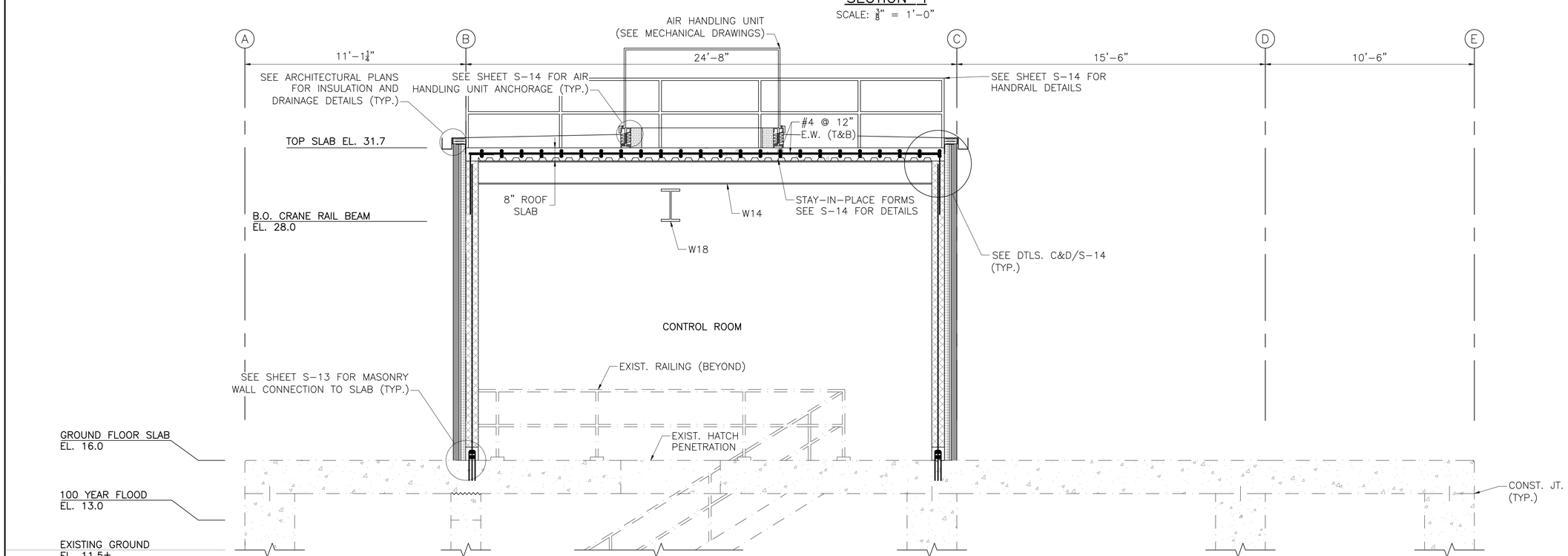

SECTION 5

SCALE: $\frac{3}{8}$" = 1'-0"

PREPARED BY

BETA
www.BETA-Inc.com

REGISTERED PROFESSIONAL

SUBCONSULTANT

TODD M. WARZECKI
8/17/20
No. 9414
REGISTERED PROFESSIONAL ENGINEER CIVIL

PROJECT

Main Lift

Pump Station

Taunton, MA

TITLE

CONTROL BUILDING SECTIONS

NO.	REVISIONS	DATE

DRAWN BY:	BWN
DESIGNED BY:	TMW
CHECKED BY:	CWJ
ISSUE DATE:	3/31/2022
BETA JOB NO.:	5530

SCALE

AS SHOWN

UNLESS OTHERWISE NOTED OR CHANGED BY REPRODUCTION

SHEET NO.

S-10

8/18/2020 3:46 PM J:\TAUNTON\MAIN LIFT PUMP STATION\AUTOCAD\DRAWINGFILES\STRUCTURAL\PHASE 3\S-95530_SR9.DWG (BETA STB BW.STB)

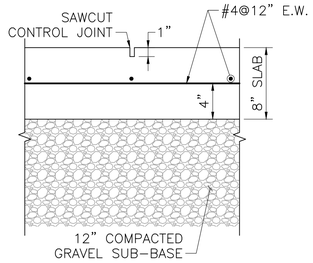

CONTROL JOINT

SCALE: $1\frac{1}{2}$" = 1'-0"

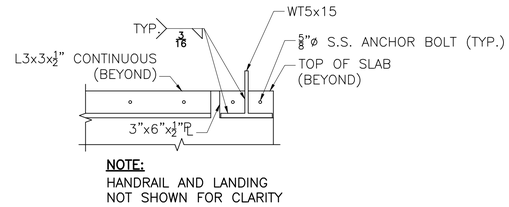

NOTE:
HANDRAIL AND LANDING
NOT SHOWN FOR CLARITY

SECTION 6

SCALE: $1\frac{1}{2}$" = 1'-0"

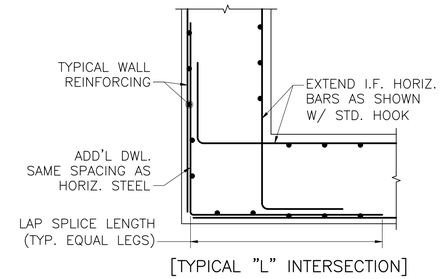

[TYPICAL "L" INTERSECTION]

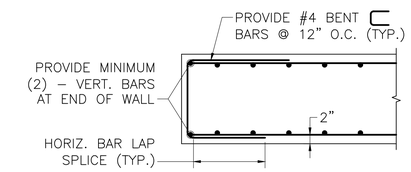

[AT PIPE PENETRATIONS OR ENDS]

TYPICAL REINFORCING DETAILS

SCALE: $\frac{1}{2}$" = 1'-0"

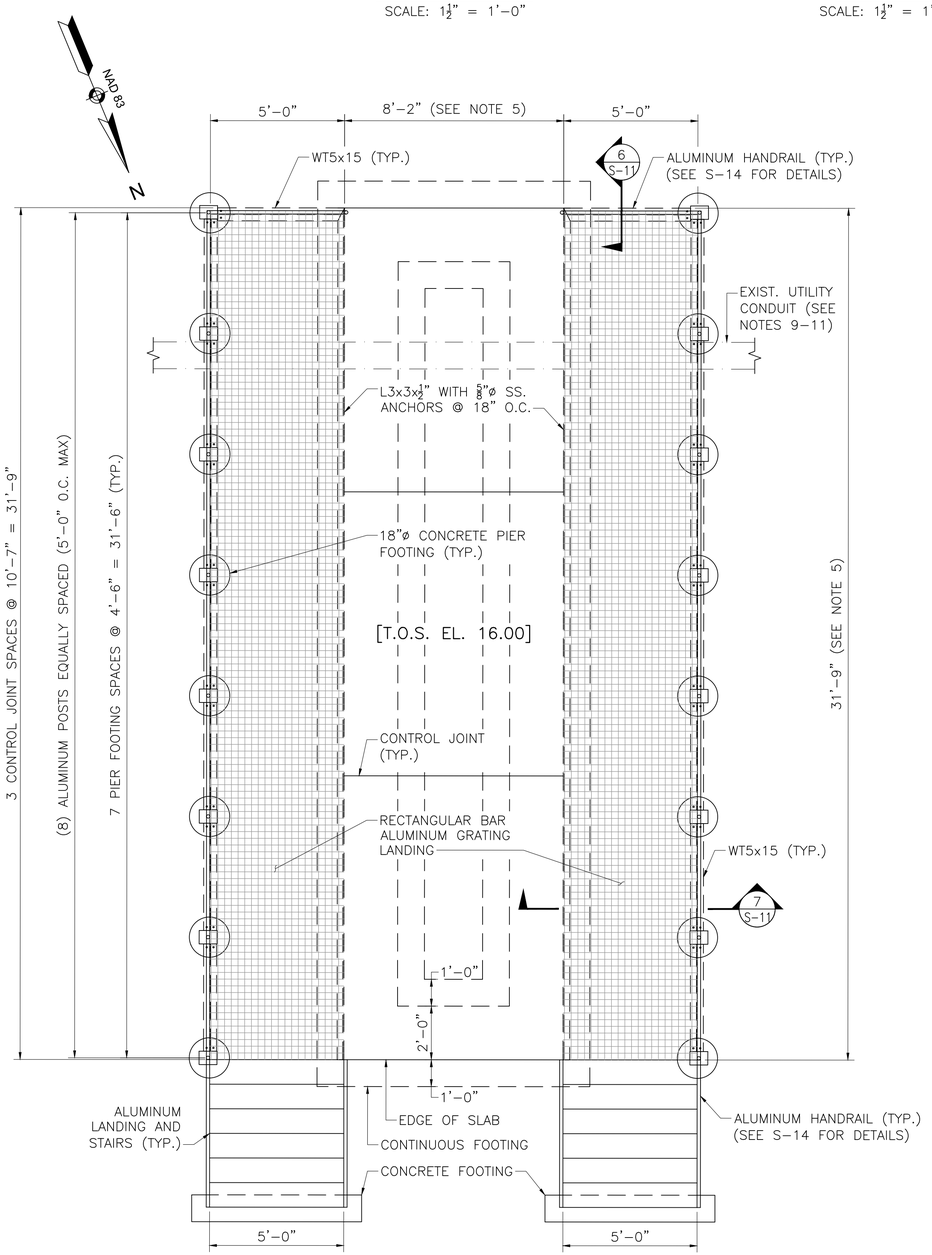

GENERATOR PAD PLAN

SCALE: $\frac{3}{8}$" = 1'-0"

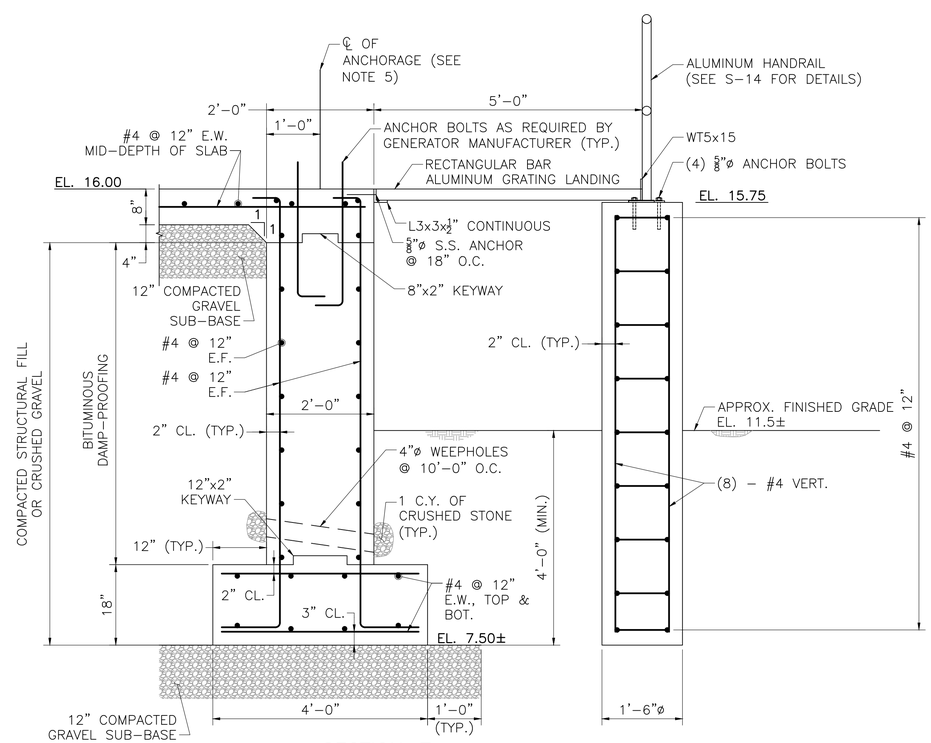

SECTION 7

SCALE: $\frac{3}{4}$" = 1'-0"

NOTES:

1. ALL CONCRETE SHALL BE f'c = 4000 P.S.I.
2. ALL STEEL REINFORCEMENT SHALL CONFORM TO ASTM A615 GRADE 60.
3. ALL ALUMINUM SURFACES IN CONTACT WITH CONCRETE SHALL BE COATED WITH A HEAVY BITUMINOUS TROWELING MASTIC.
4. CONTROL JOINTS SHALL BE SAWCUT AFTER PLACEMENT OF THE CONCRETE SLAB.
5. COORDINATE FINAL GENERATOR PAD DIMENSIONS WITH MANUFACTURER. ANCHOR BOLTS FOR THE GENERATOR SHALL BE AS REQUIRED BY THE MANUFACTURER AND SET PRIOR TO CONCRETE PLACEMENT.
6. ALL TOPSOIL, SUBSOIL, NON-ENGINEERED FILL AND ANY OTHER DELETERIOUS SOIL SHOULD BE REMOVED FROM THE BUILDING FOOTPRINT. STRUCTURAL FILL AND/OR CRUSHED GRAVEL SHOULD BE PLACED AND COMPACTED IN LIFTS TO THE ELEVATION OF BOTTOM OF FOUNDATION AND SLAB.
7. ALUMINUM PLATES AND STRUCTURAL SHAPES SHALL CONFORM TO THE REQUIREMENTS OF 6063 T6.
8. ALL BOLTS AND NUTS SHALL BE STAINLESS STEEL CONFORMING TO 2024 T4.
9. SIZE, LOCATION, AND DEPTH OF EXISTING ELECTRIC UTILITY CONDUIT IS UNKNOWN. BLOCK OUT WALLS AS REQUIRED AS TO NOT DISTURB EXISTING CONDUIT.
10. IF BLOCK OUT EXCEEDS 12" USE PENETRATION DETAILS ON S-12.
11. LOCATION OF 18"ø CONCRETE PIERS MAY BE MOVED TO ACCOMMODATE EXISTING CONDUIT UPON APPROVAL FROM THE ENGINEER.

PREPARED BY

BETA
www.BETA-Inc.com

REGISTERED PROFESSIONAL

SUBCONSULTANT

TODD M. WARZECKI
8/17/20
No. 9414
REGISTERED
PROFESSIONAL ENGINEER
CIVIL

PROJECT

Main Lift

Pump Station

Taunton, MA

TITLE

GENERATOR PAD

NO.	REVISIONS	DATE

DRAWN BY:	BWN
DESIGNED BY:	TMW
CHECKED BY:	CWJ
ISSUE DATE:	3/31/2022
BETA JOB NO.:	5530

SCALE

AS SHOWN

UNLESS OTHERWISE NOTED OR CHANGED BY REPRODUCTION

SHEET NO.

S-11

8/18/2020 3:47 PM J:\TAUNTON\MAIN LIFT PUMP STATION\AUTOCAD\DRAWING\FILES\STRUCTURAL\PHASE 3\S-1\05530_SR10.DWG (BETA STB BW.STB)

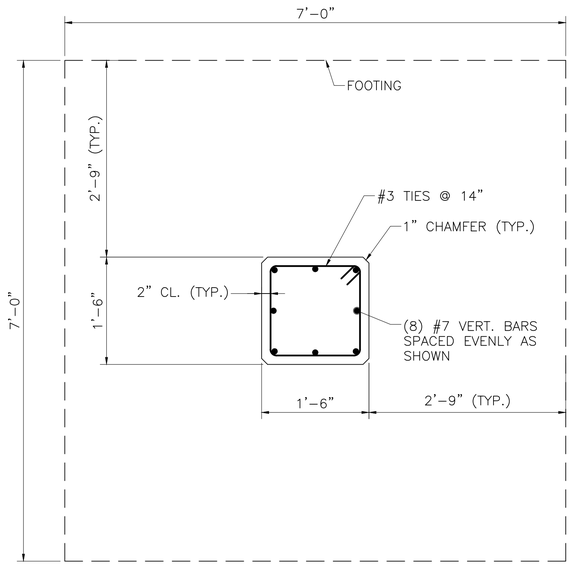

SECTION 8 – FOOTING PLAN
SCALE: 1" = 1'-0"

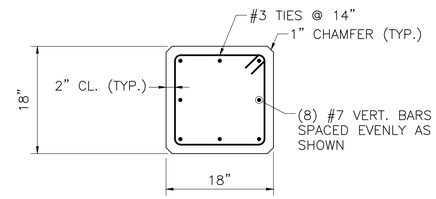

[TYPICAL 18"x18" COLUMN SECTION]

SECTION 9
SCALE: 1"=1'-0"

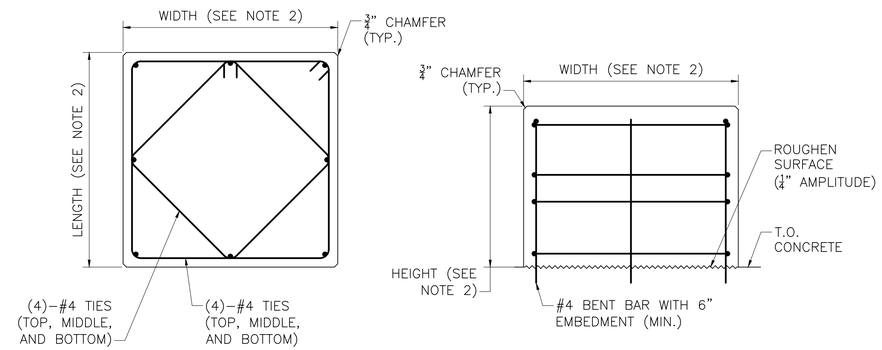

NOTES:
1. THIS DETAIL IS NOT INTENDED TO BE USED FOR PUMP PEDESTALS. PUMP PEDESTAL DETAILS TO BE PROVIDED BY PUMP MANUFACTURER.
2. HEIGHT AND WIDTH OF EQUIPMENT PEDESTAL TO BE PROVIDED BY EQUIPMENT MANUFACTURER.

EQUIPMENT PEDESTAL
NOT TO SCALE

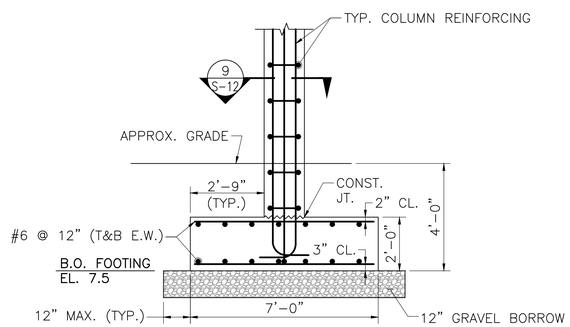

EXTERIOR COLUMN FOOTING
SCALE: ⅜" = 1'-0"

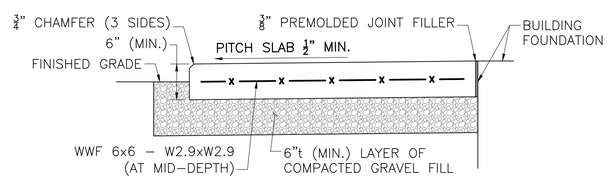

CONCRETE LANDING DETAIL
NOT TO SCALE

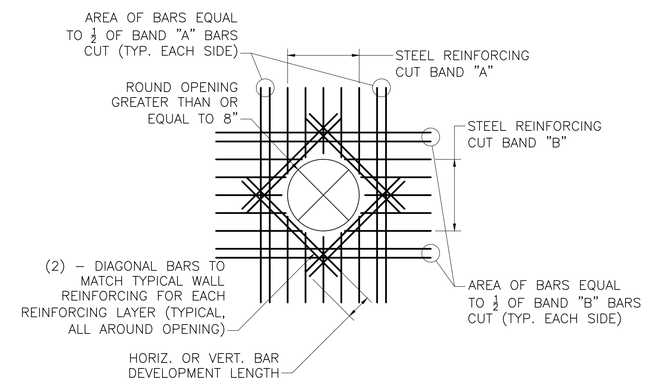

[ROUND]

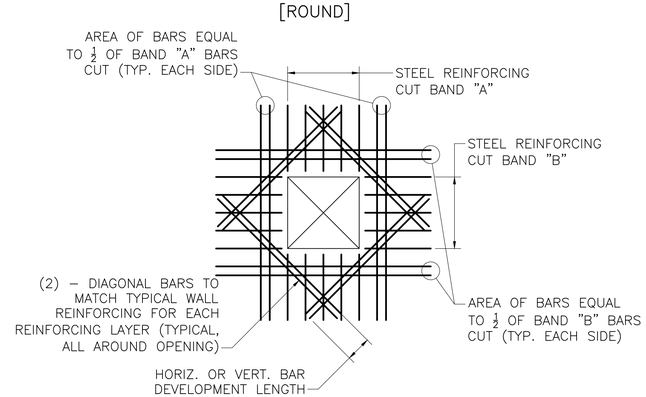

[SQUARE]

TYPICAL PENETRATION DETAIL
SCALE: ½" = 1'-0"

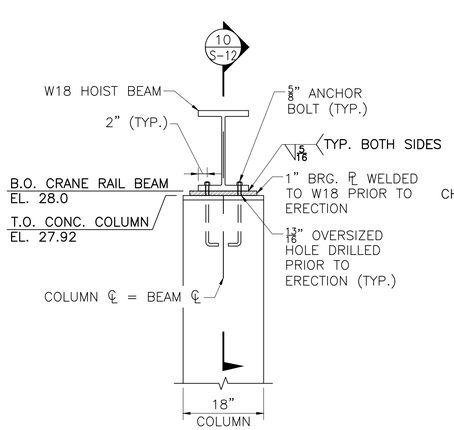

[ELEVATION]

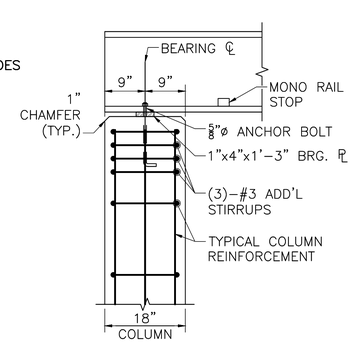

[SECTION 10]

DETAIL A
SCALE: ¾" = 1'-0"

PREPARED BY

BETA
www.BETA-Inc.com

REGISTERED PROFESSIONAL

SUBCONSULTANT

TODD M. WARZECKI
No. 9414
REGISTERED PROFESSIONAL ENGINEER CIVIL

PROJECT

Main Lift

Pump Station

Taunton, MA

TITLE

CONCRETE DETAILS

NO.	REVISIONS	DATE

DRAWN BY:	BWN
DESIGNED BY:	TMW
CHECKED BY:	CWJ
ISSUE DATE:	3/31/2022
BETA JOB NO.:	5530

SCALE

AS SHOWN

UNLESS OTHERWISE NOTED OR CHANGED BY REPRODUCTION

SHEET NO.

S-12

8/18/2020 3:47 PM J:\TAUNTON\MAIN LIFT PUMP STATION\AUTOCAD\DRAWINGFILES\STRUCTURAL\PHASE 3\S-115530_SR11.DWG (BETA STB BW.STB)

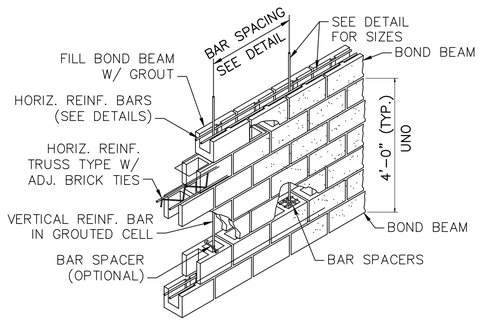

CMU WALL CONSTRUCTION
SCALE: NOT TO SCALE

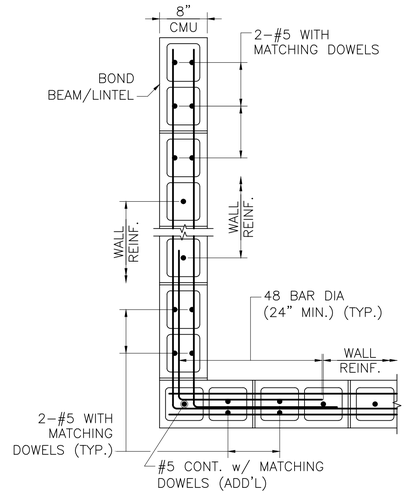

TYPICAL CMU WALL CORNER AND AT END
NOT TO SCALE

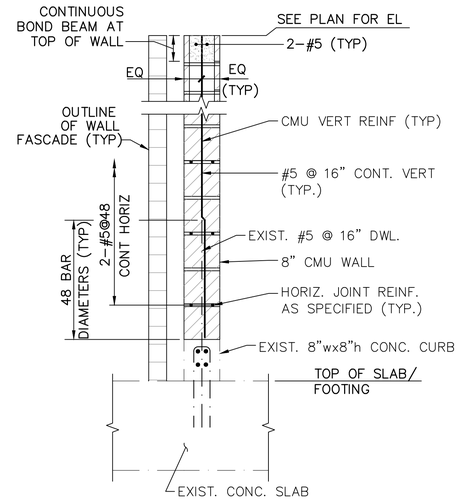

NOTE:
CMU EXTERIOR CONDITION SHOWN,
CMU INTERIOR CONDITION SIMILAR

TYPICAL CMU WALL REINFORCING
SCALE: ¾" = 1'-0"

CMU MASONRY NOTES:

1. f'm = 2000 P.S.I. (MIN.)
2. CMU MASONRY DETAILS, ELEVATIONS AND NOTES ON THIS SHEET APPLY TO ALL CMU EXTERIOR AND INTERIOR WALLS U.N.O. (WALLS CONSIST OF A SINGLE CMU WYTHE AND ONE BRICK WYTHE)
3. FULLY GROUT ALL CELLS AND COURSES WITH VERTICAL OR HORIZONTAL REINFORCING. PROVIDE 2" MINIMUM CLEAR COVER TO THE REINFORCING (U.N.O.).
4. ALL HORIZONTAL REINFORCING, EXCEPT IN THE LINTELS, SHALL BE PLACED IN A CMU BOND BEAM BLOCK. PROVIDE GALVANIZED METAL LATH IN THE HORIZONTAL JOINT BELOW THE BLOCK TO RETAIN THE GROUT.
5. PROVIDE A CONTINUOUS BOND BEAM WITH 2-#5 CONTINUOUS HORIZONTAL BARS AT THE TOP OF ALL WALLS.
6. REINFORCING LAP SPLICE LENGTH = 48 BAR DIAMETERS (24" MINIMUM).
7. PROVIDE HORIZONTAL JOINT REINFORCING AS NEEDED.
8. REINFORCING BARS TO EXTEND 12 BAR DIAMETERS BUT NOT LESS THAN 12" BEYOND BEND U.N.O.
9. FOR PLAN LOCATION OF MASONRY WALLS AND OTHER MASONRY DETAILS, SEE ARCHITECTURAL DRAWINGS.
10. FOR LOCATION AND SIZE OF MASONRY WALL OPENINGS, SEE ARCHITECTURAL DRAWINGS.

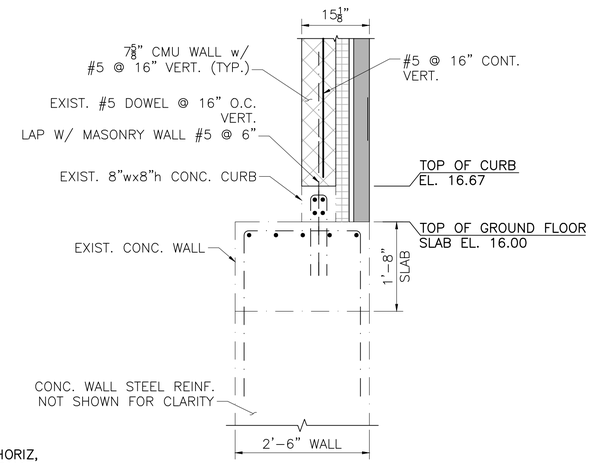

SECTION 11 AT STAIRWAY OPENING
SCALE: ¾" = 1'-0"

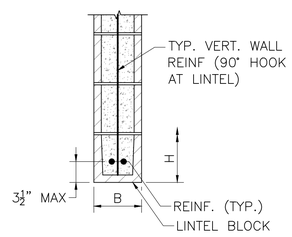

MARK/LOCATION	W	B	H	REINF.
L1	≤ 3'-0"	WIDTH OF CMU WALL	8"	2-#5 BOT.
L2	> 3'-0" BUT ≤ 6'-0"	WIDTH OF CMU WALL	16"	2-#5 BOT.

NOTES:

1. PROVIDE 8" MINIMUM BEARING AT EACH SIDE OF CLEAR SPAN.
2. FULLY GROUT CMU OVER DEPTH "H" TO ENDS OF BEARING.
3. MAY CONSIST OF FULLY GROUTED H=16" CMU LINTEL BLOCK OR H = 8" CMU LINTEL BLOCK PLUS 8" CMU BLOCK(S), FULLY GROUTED.

TYPICAL CMU LINTEL
NOT TO SCALE

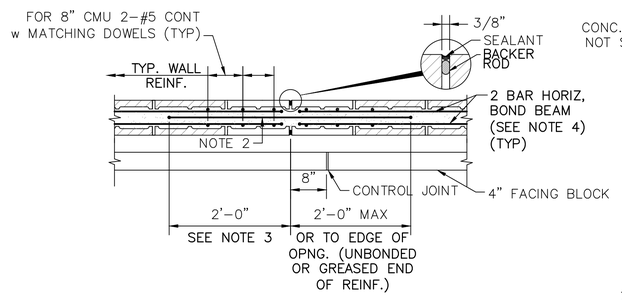

NOTES:

1. TERMINATE HORIZ. REINFORCEMENT WITH A STANDARD HOOK TWO INCHES FROM CONTROL JOINTS.
2. PROVIDE SMOOTH DOWEL IDENTICAL TO HORIZONTAL BAR DIAMETER ACROSS THE JOINT AT HORIZONTAL BAR LOCATIONS. PREVENT BOND BETWEEN BAR AND GROUT ON ONE SIDE OF JOINT WITH PLASTIC SLEEVE OR GREASE. CAP ALL DOWELS TO ALLOW ONE INCH OF MOVEMENT.
3. PROVIDE STD. HOOK ON SIDE WITH BOND IF 2'-0" LENGTH IS NOT POSSIBLE.
4. CONTINUE HORIZ REINF THROUGH MCJ @ BEAM BEARING, DECK BEARING, T.O.W. BOND BEAMS AND LINTEL REINF. SMOOTH DOWEL BAR NOT REQUIRED.

MASONRY CONTROL JOINT (MCJ)
SCALE: ¾" = 1'-0"

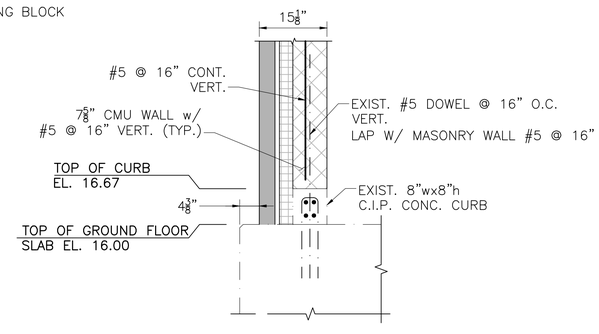

SECTION 12
SCALE: ¾" = 1'-0"

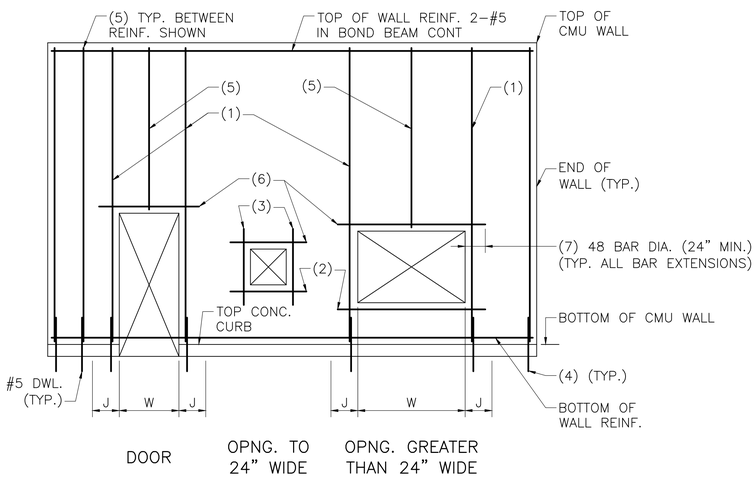

LEGEND

(1) SEE TYPICAL CMU WALL OPENING DETAIL THIS SHEET.
(2) SILL BARS, 2-#5 IN BOND BEAM.
(3) 1-#5 EACH SIDE.
(4) SEE TYPICAL CMU WALL CORNER AND END DETAIL THIS SHEET.
(5) BETWEEN BARS SHOWN, PROVIDE TYPICAL WALL REINFORCING PER TYPICAL CMU WALL REINFORCING DETAIL ON THIS SHEET.
(6) SEE TYPICAL CMU LINTEL DETAIL ON THIS SHEET, AND ARCHITECTURAL DRAWINGS.
(7) IF FULL LENGTH IS NOT AVAILABLE, EXTEND AS FAR AS POSSIBLE, HOOK 90°, THEN EXTEND, BEYOND BEND, REMAINDER OF LENGTH REQUIRED (BUT NOT LESS THAN 12")

TYPICAL CMU WALL ELEVATION
NOT TO SCALE

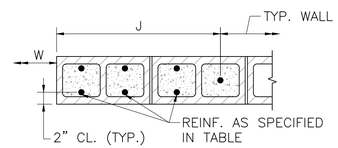

W	JAMB WIDTH, J	VERTICAL REINF.
≤ 3'-4"	1'-6"	2-#5 @ 16" O.C. E.F.
> 3'-4" BUT ≤ 6'-8"	2'-0"	2-#5 @ 8" O.C. E.F.
> 6'-8" BUT ≤ 12'-0"	2'-8"	2-#5 @ 8" O.C. E.F.

TYPICAL CMU WALL OPENING
NOT TO SCALE

PREPARED BY

BETA
www.BETA-Inc.com

REGISTERED PROFESSIONAL

SUBCONSULTANT

TODD M. WARZECKI
No. 9414
REGISTERED PROFESSIONAL ENGINEER CIVIL

PROJECT

Main Lift

Pump Station

Taunton, MA

TITLE

MASONRY DETAILS

NO.	REVISIONS	DATE

DRAWN BY:	BWN
DESIGNED BY:	TMW
CHECKED BY:	CWJ
ISSUE DATE:	3/31/2022
BETA JOB NO.:	5530

SCALE

AS SHOWN

UNLESS OTHERWISE NOTED OR CHANGED BY REPRODUCTION

SHEET NO.

S-13

8/18/2020 3:47 PM J:\TAUNTON\MAIN LIFT PUMP STATION\AUTOCAD\DRAWINGFILES\STRUCTURAL\PHASE 3\S-12\5530_SR12.DWG (BETA STB BW.STB)

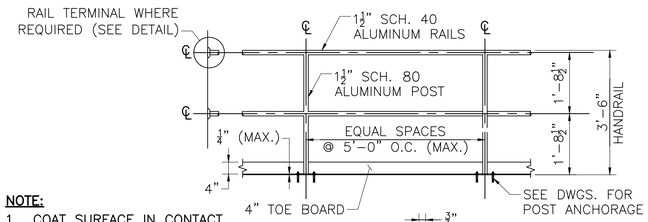

NOTE:
1. COAT SURFACE IN CONTACT WITH DISSIMILAR MATERIALS WITH BITUMASTIC COATING AS PER THE SPECIFICATIONS.

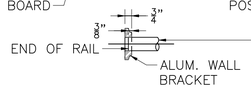

RAIL TERMINAL

1. FASTEN RAIL TERMINAL TO WALL BRACKET PER MFR'S RECOMMENDATIONS.
2. WALL FLANGE TO BE MOUNTED TO WALL W/ (2)-⅜"ø S.S. EPOXY ANCHORS.

TWO-BAR HANDRAIL

SCALE": ½" = 1'-0"

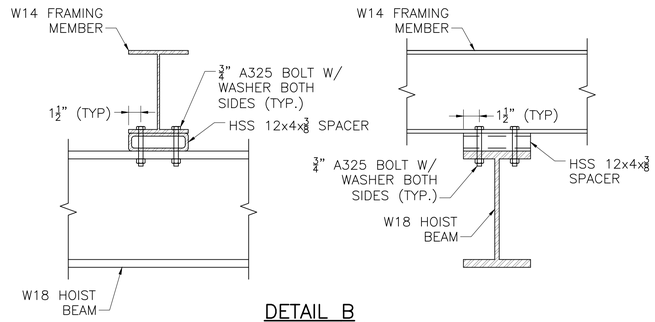

DETAIL B

SCALE: 1"=1'-0"

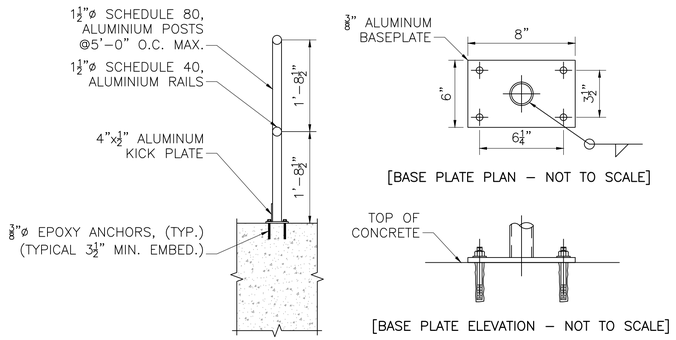

TOP MOUNTED HANDRAIL DETAIL

SCALE": ¾" = 1'-0"

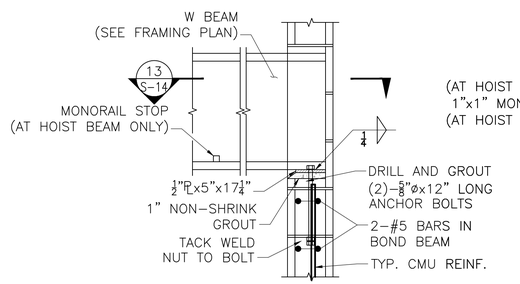

ELEVATION

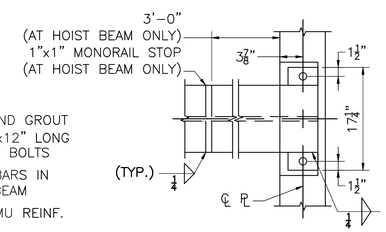

SECTION 13

DETAIL C

NOT TO SCALE

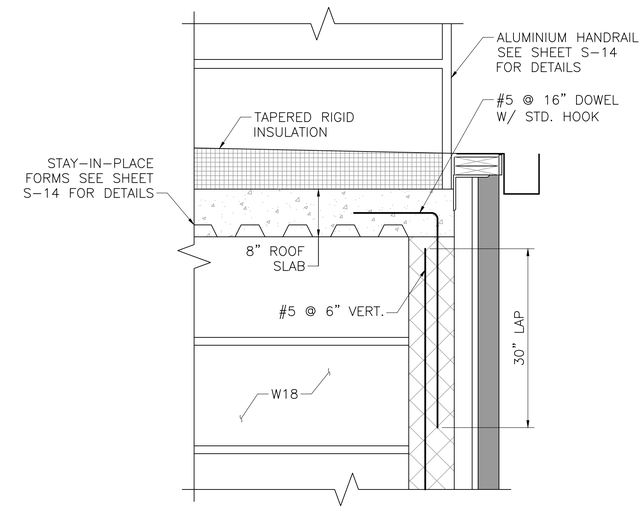

DETAIL D

SCALE: 1" = 1'-0"

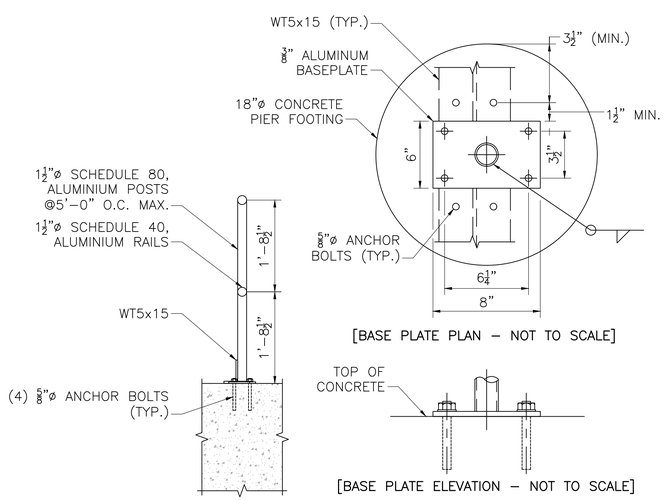

NOTE:
1. CUT HOLES IN GRATING AS REQUIRED TO ACCOUNT FOR ANCHOR BOLTS.

TOP MOUNTED HANDRAIL DETAIL – GENERATOR PAD

SCALE": ¾" = 1'-0"

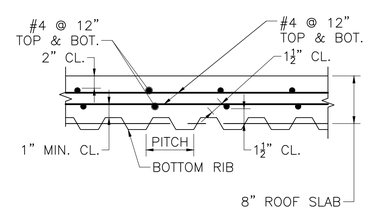

STAY-IN-PLACE FORM DETAILS

NOT TO SCALE

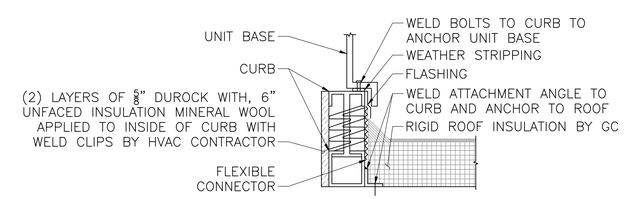

AIR HANDLING UNIT ANCHORAGE

SCALE: 1" = 1'-0"

PREPARED BY

BETA
www.BETA-Inc.com

REGISTERED PROFESSIONAL

SUBCONSULTANT

TODD M. WARZECKI
No. 9414
REGISTERED PROFESSIONAL ENGINEER CIVIL

PROJECT

Main Lift Pump Station

Taunton, MA

TITLE

MISCELLANEOUS DETAILS

NO.	REVISIONS	DATE

DRAWN BY:	BWN
DESIGNED BY:	TMW
CHECKED BY:	CWJ
ISSUE DATE:	3/31/2022
BETA JOB NO.:	5530

SCALE

AS SHOWN

UNLESS OTHERWISE NOTED OR CHANGED BY REPRODUCTION

SHEET NO.

S-14

8/18/2020 3:48 PM J:\TAUNTON\MAIN LIFT PUMP STATION\AUTOCAD\DRAWINGFILES\STRUCTURAL\PHASE 3\S-13\5530_SR13.DWG (BETA STB BW.STB)

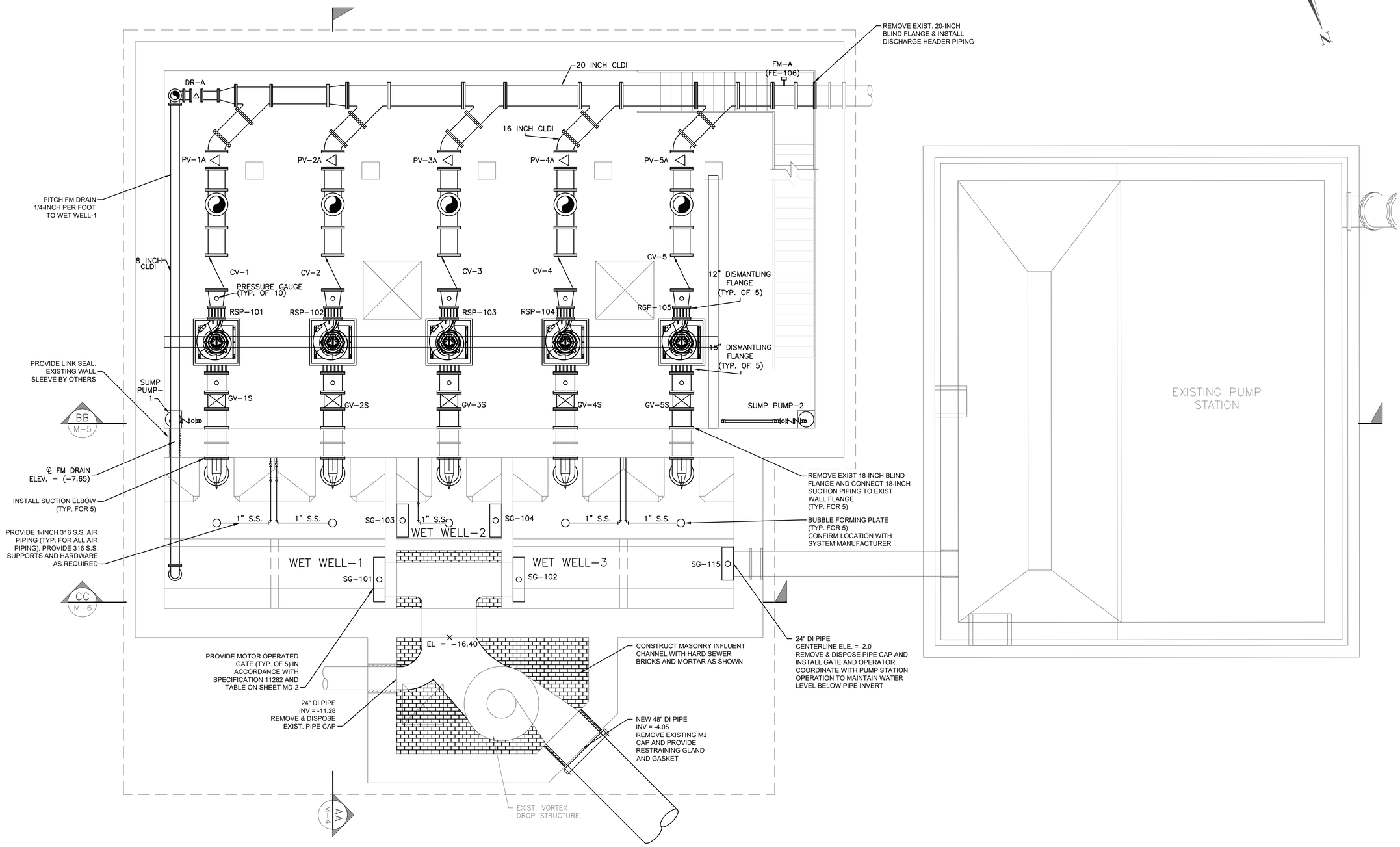

PLAN & SECTIONS - PROPOSED

SCALE: 1/4 " = 1'

PREPARED BY

BETA

www.BETA-Inc.com

REGISTERED PROFESSIONAL

COMMONWEALTH OF MASSACHUSETTS
JOSEPH FEDERICO, JR.
No. 30863
REGISTERED PROFESSIONAL ENGINEER

SUBCONSULTANT

PROJECT

MAIN LIFT PUMP STATION IMPROVEMENTS

TAUNTON, MA

TITLE

BASEMENT LEVEL PLAN

NO.	REVISIONS	DATE

DRAWN BY:	BM
DESIGNED BY:	AJG
CHECKED BY:	CC
ISSUE DATE:	3/31/2022
BETA JOB NO.:	5530

SCALE

AS SHOWN

UNLESS OTHERWISE NOTED OR CHANGED BY REPRODUCTION

SHEET NO.

M-1

3/28/2022 11:01 AM J:\TAUNTON\MAIN LIFT PUMP STATION\AUTOCAD\DRAWINGFILES\CONTRACT 3 - MAIN LIFT PS BUILDOUT CONTRACT\MECHANICAL - BASEMENT LEVEL PLAN.DWG

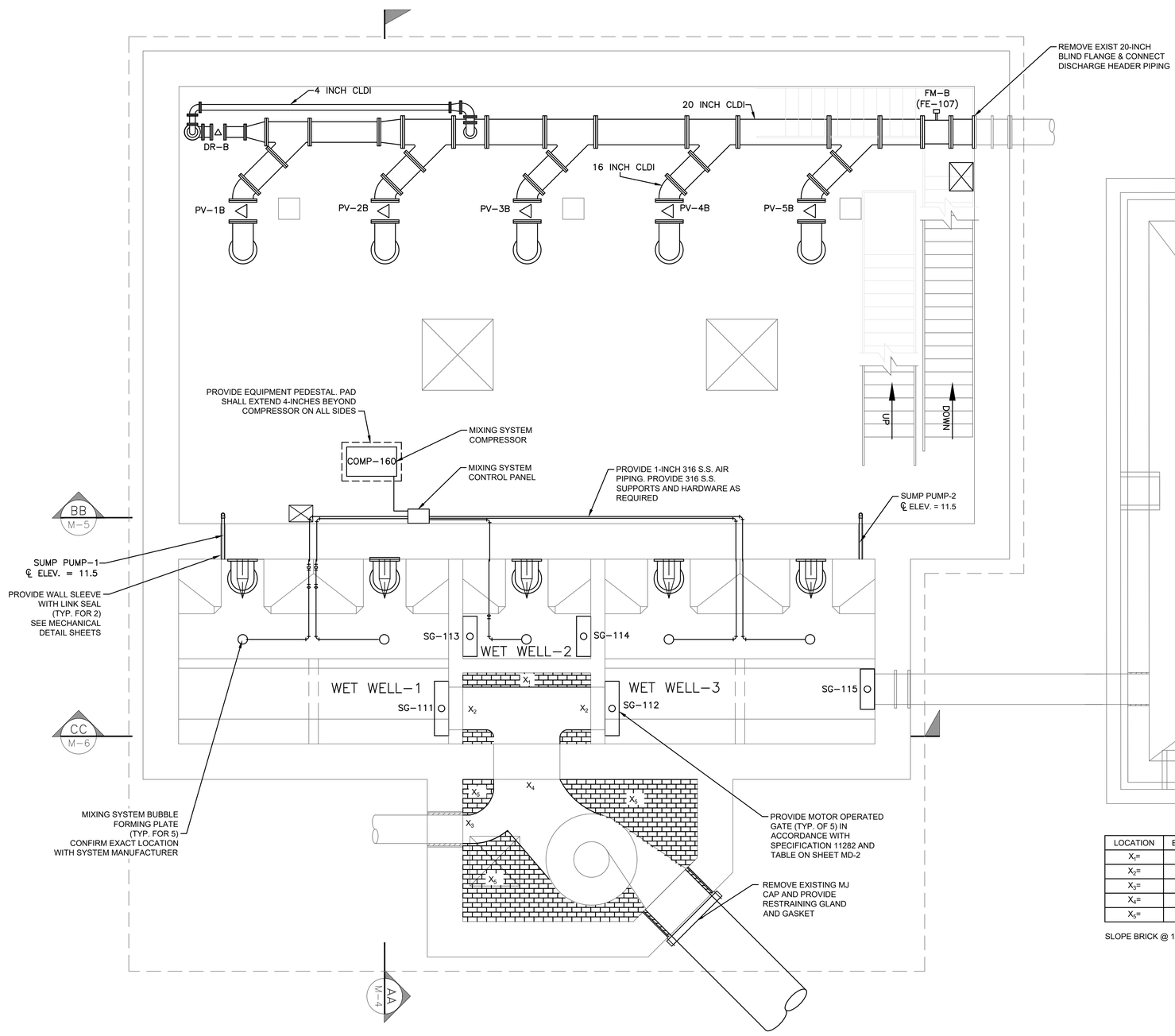

MEZZANINE LEVEL PLAN
SCALE: 1/4 " = 1'

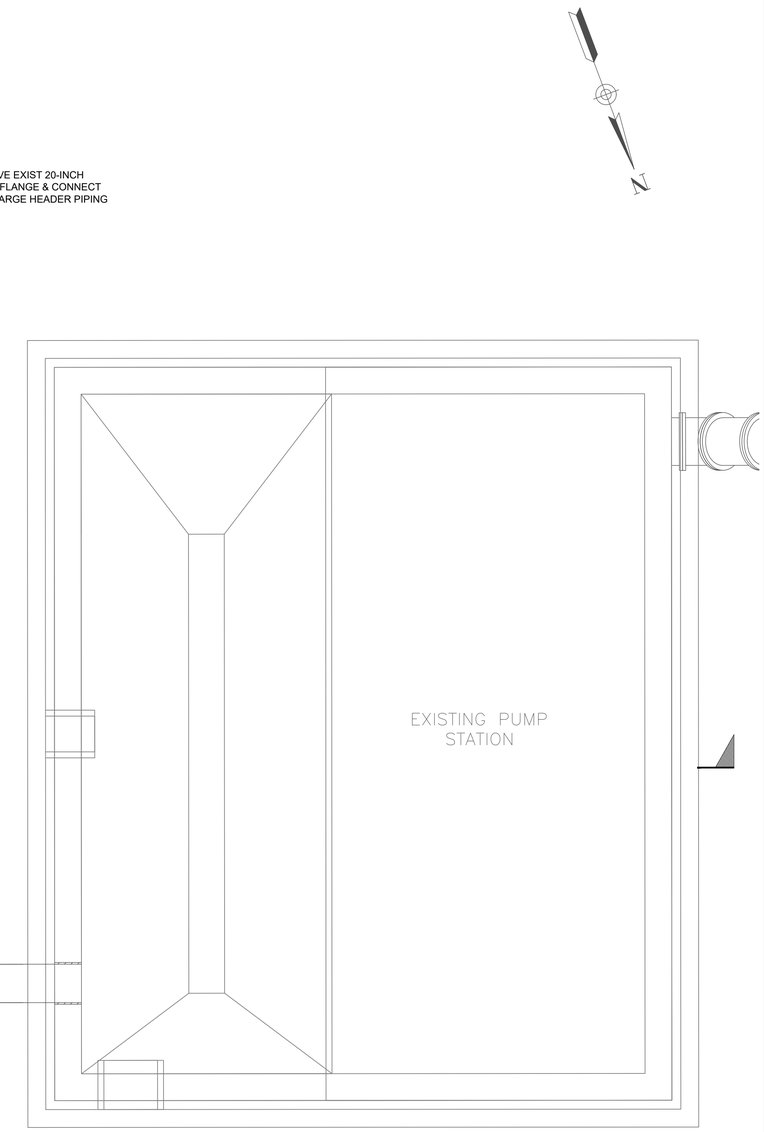

LOCATION	ELEVATION
X_1=	-13
X_2=	-16.4
X_3=	-11.28
X_4=	-16.4
X_5=	-9

SLOPE BRICK @ 1" PER FOOT

PREPARED BY

BETA
www.BETA-Inc.com

REGISTERED PROFESSIONAL

COMMONWEALTH OF MASSACHUSETTS
JOSEPH FEDERICO, JR.
No. 30863
REGISTERED PROFESSIONAL ENGINEER

SUBCONSULTANT

PROJECT

MAIN LIFT PUMP STATION IMPROVEMENTS

TAUNTON, MA

TITLE

MEZZANINE LEVEL PLAN

NO.	REVISIONS	DATE

DRAWN BY:	BM
DESIGNED BY:	AJG
CHECKED BY:	CC
ISSUE DATE:	3/31/2022
BETA JOB NO.:	5530

SCALE

AS SHOWN

UNLESS OTHERWISE NOTED OR CHANGED BY REPRODUCTION

SHEET NO.

M-2

3/28/2022 11:01 AM J:\TAUNTON\MAIN LIFT PUMP STATION\AUTOCAD\DRAWINGFILES\CONTRACT 3 - MAIN LIFT PS BUILDOUT CONTRACT\MECHANICAL - MEZZANINE LEVEL PLAN.DWG

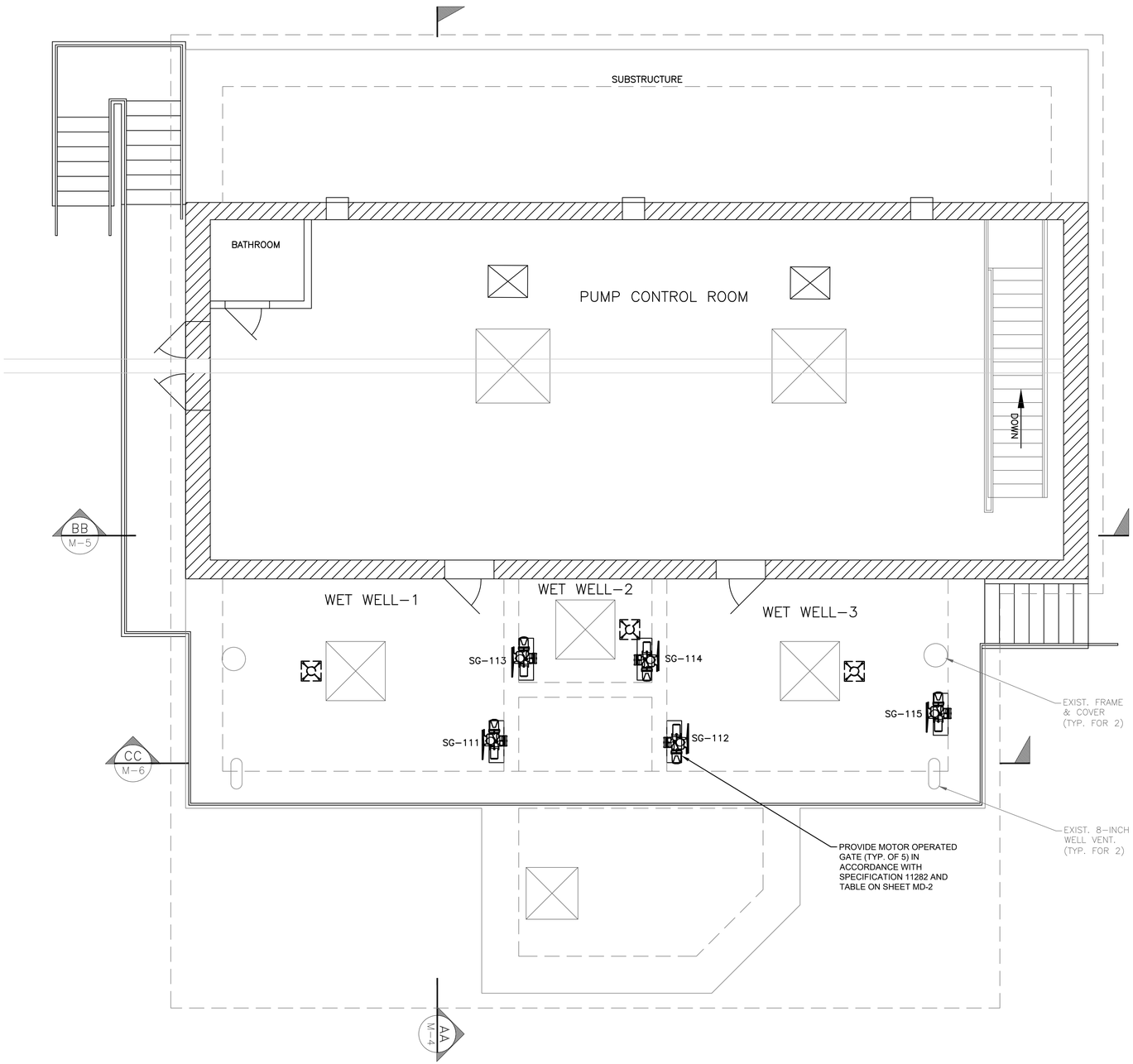

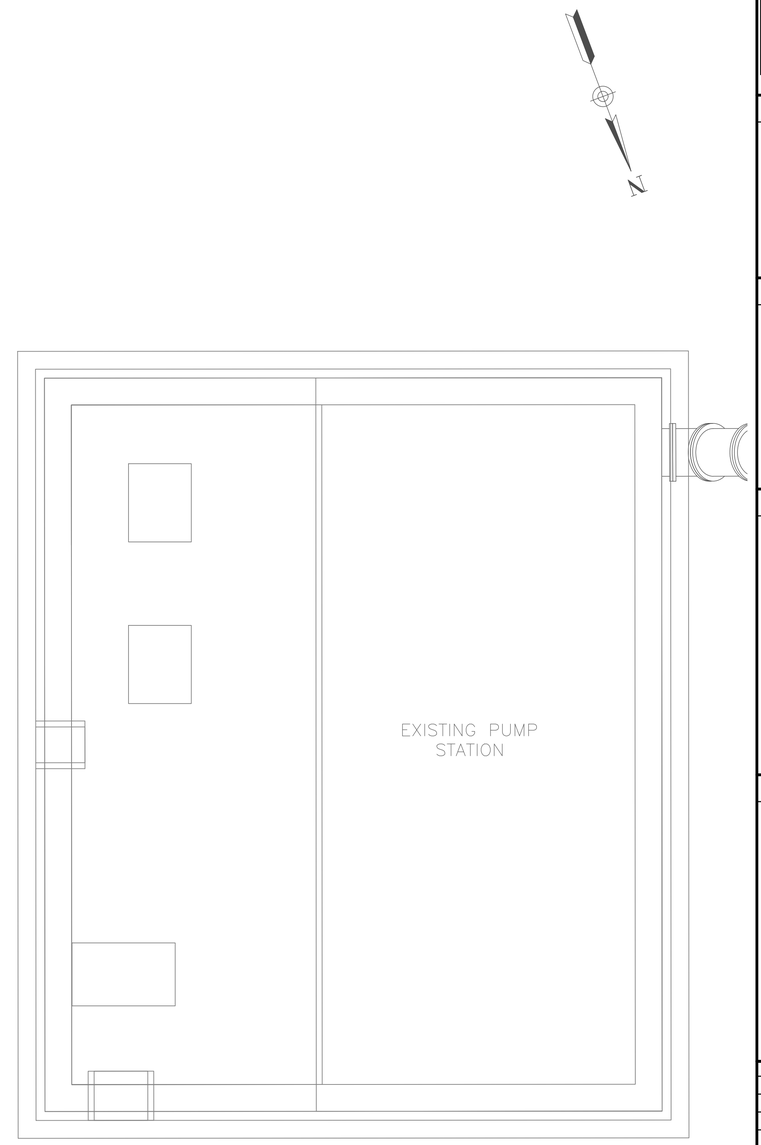

GROUND LEVEL PLAN
SCALE: 1/4 " = 1'

PREPARED BY

BETA
www.BETA-Inc.com

REGISTERED PROFESSIONAL

COMMONWEALTH OF MASSACHUSETTS
JOSEPH FEDERICO, JR.
No. 30863
REGISTERED PROFESSIONAL ENGINEER

SUBCONSULTANT

PROJECT

MAIN LIFT PUMP STATION IMPROVEMENTS

TAUNTON, MA

TITLE

GROUND LEVEL PLAN

NO.	REVISIONS	DATE

DRAWN BY:	BM
DESIGNED BY:	AJG
CHECKED BY:	CC
ISSUE DATE:	3/31/2022
BETA JOB NO.:	5530

SCALE

AS SHOWN

UNLESS OTHERWISE NOTED OR CHANGED BY REPRODUCTION

SHEET NO.

M-3

3/28/2022 11:01 AM J:\TAUNTON\MAIN LIFT PUMP STATION\AUTOCAD\DRAWINGFILES\CONTRACT 3 - MAIN LIFT PS BUILDOUT CONTRACT\MECHANICAL - GROUND LEVEL PLAN.DWG

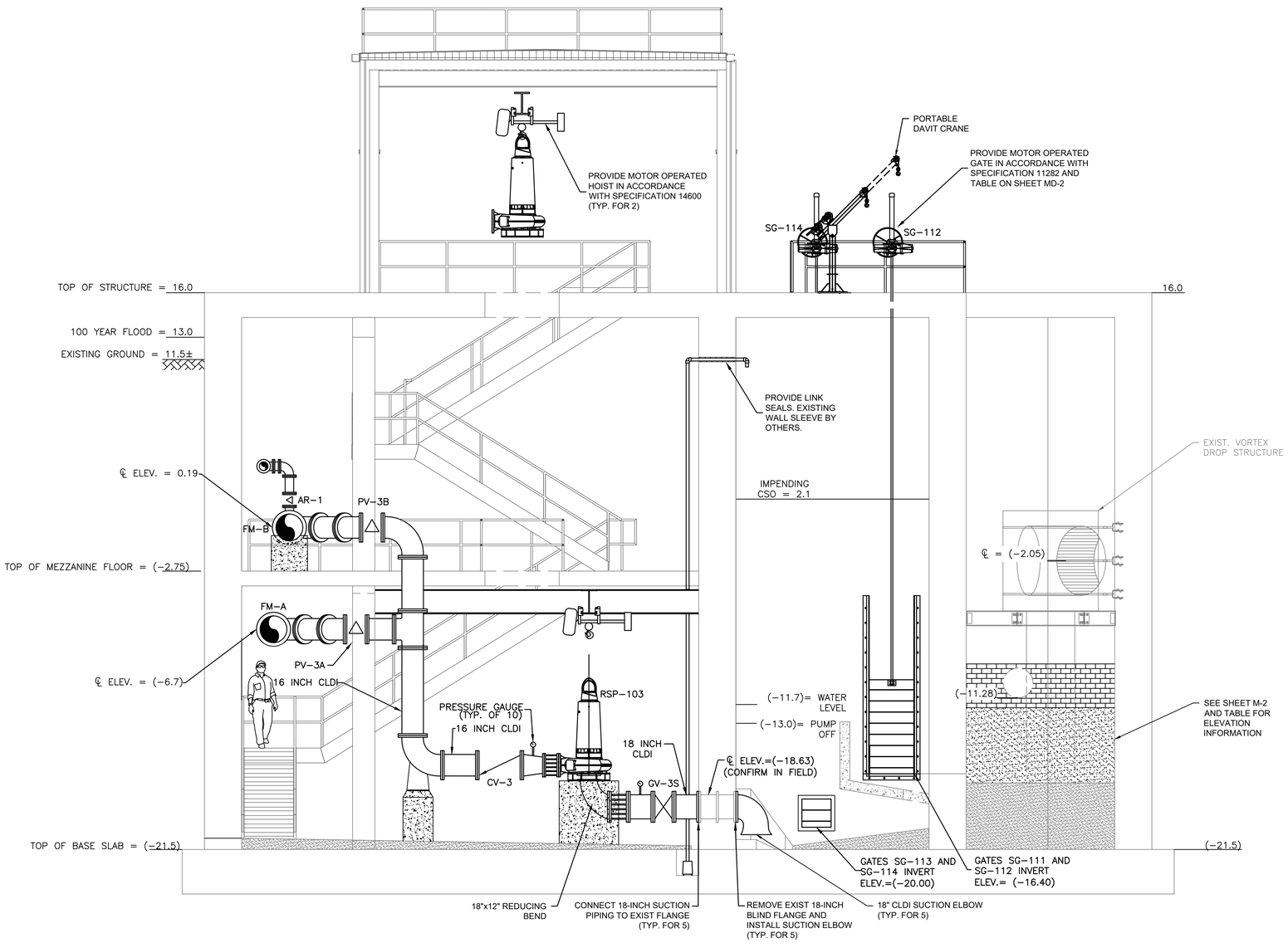

PROPOSED SECTION AA M-1

SCALE: 1/4 " = 1'

VORTEX DROP STRUCTURE ELEVATIONS	
DESCRIPTION	ELEV.
48" DI INFLUENT PIPE CL	-2.05
TOP OF BRICK	-9.00
24" DI INFLUENT PIPE INV.	-11.28
TOP OF PROPOSED CONC.	VARIES*
48" INV. OUT	-16.40
TOP OF EXISTING CONC.	-17.07

*PROVIDE MINIMUM 2 COURSES OF BRICK

PREPARED BY

BETA

www.BETA-Inc.com

REGISTERED PROFESSIONAL

COMMONWEALTH OF MASSACHUSETTS JOSEPH FEDERICO, JR. No. 30863 REGISTERED PROFESSIONAL ENGINEER

SUBCONSULTANT

PROJECT

MAIN LIFT PUMP STATION IMPROVEMENTS

TAUNTON, MA

TITLE

SECTION A-A

NO.	REVISIONS	DATE

DRAWN BY:	BM
DESIGNED BY:	AJG
CHECKED BY:	CC
ISSUE DATE:	3/31/2022
BETA JOB NO.:	5530

SCALE

AS SHOWN

UNLESS OTHERWISE NOTED OR CHANGED BY REPRODUCTION

SHEET NO.

M-4

3/28/2022 11:01 AM J:\TAUNTON\MAIN LIFT PUMP STATION\AUTOCAD\DRAWINGFILES\CONTRACT 3 - MAIN LIFT PS BUILDOUT CONTRACT\MECHANICAL - SECTIONS.DWG

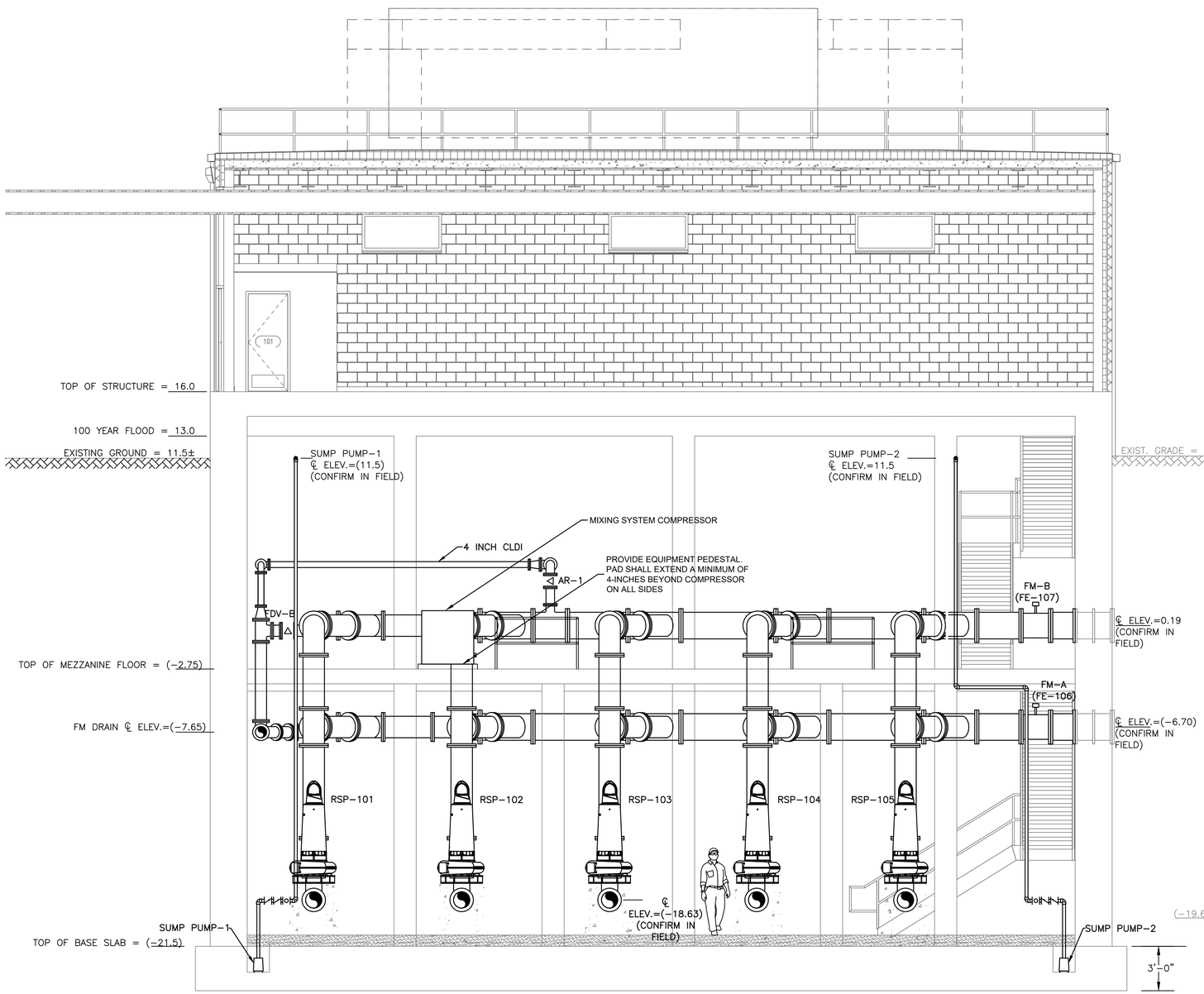

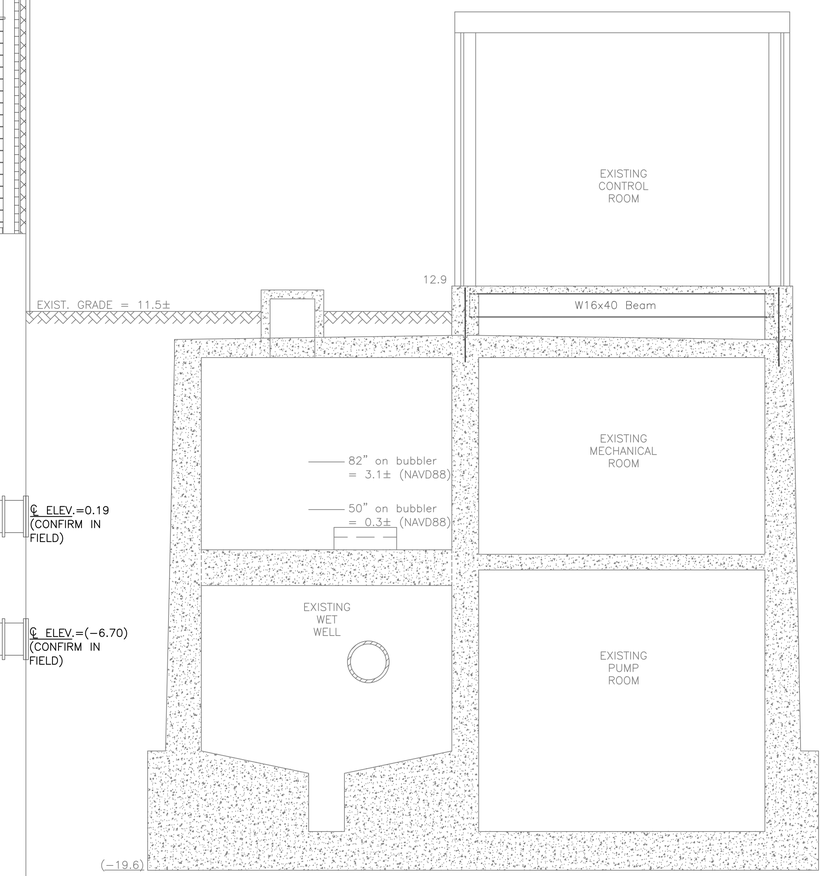

PROPOSED SECTION BB M-1

SCALE: 1/4 " = 1'

PREPARED BY

BETA

www.BETA-Inc.com

REGISTERED PROFESSIONAL

COMMONWEALTH OF MASSACHUSETTS
JOSEPH FEDERICO, JR.
No. 30863
REGISTERED PROFESSIONAL ENGINEER

SUBCONSULTANT

PROJECT

MAIN LIFT PUMP STATION IMPROVEMENTS

TAUNTON, MA

TITLE

SECTION B-B

NO.	REVISIONS	DATE

DRAWN BY:	BM
DESIGNED BY:	AJG
CHECKED BY:	CC
ISSUE DATE:	3/31/2022
BETA JOB NO.:	5530

SCALE

AS SHOWN

UNLESS OTHERWISE NOTED OR CHANGED BY REPRODUCTION

SHEET NO.

M-5

3/28/2022 11:01 AM J:\TAUNTON\MAIN LIFT PUMP STATION\AUTOCAD\DRAWINGFILES\CONTRACT 3 - MAIN LIFT PS BUILDOUT CONTRACT\MECHANICAL - SECTIONS.DWG

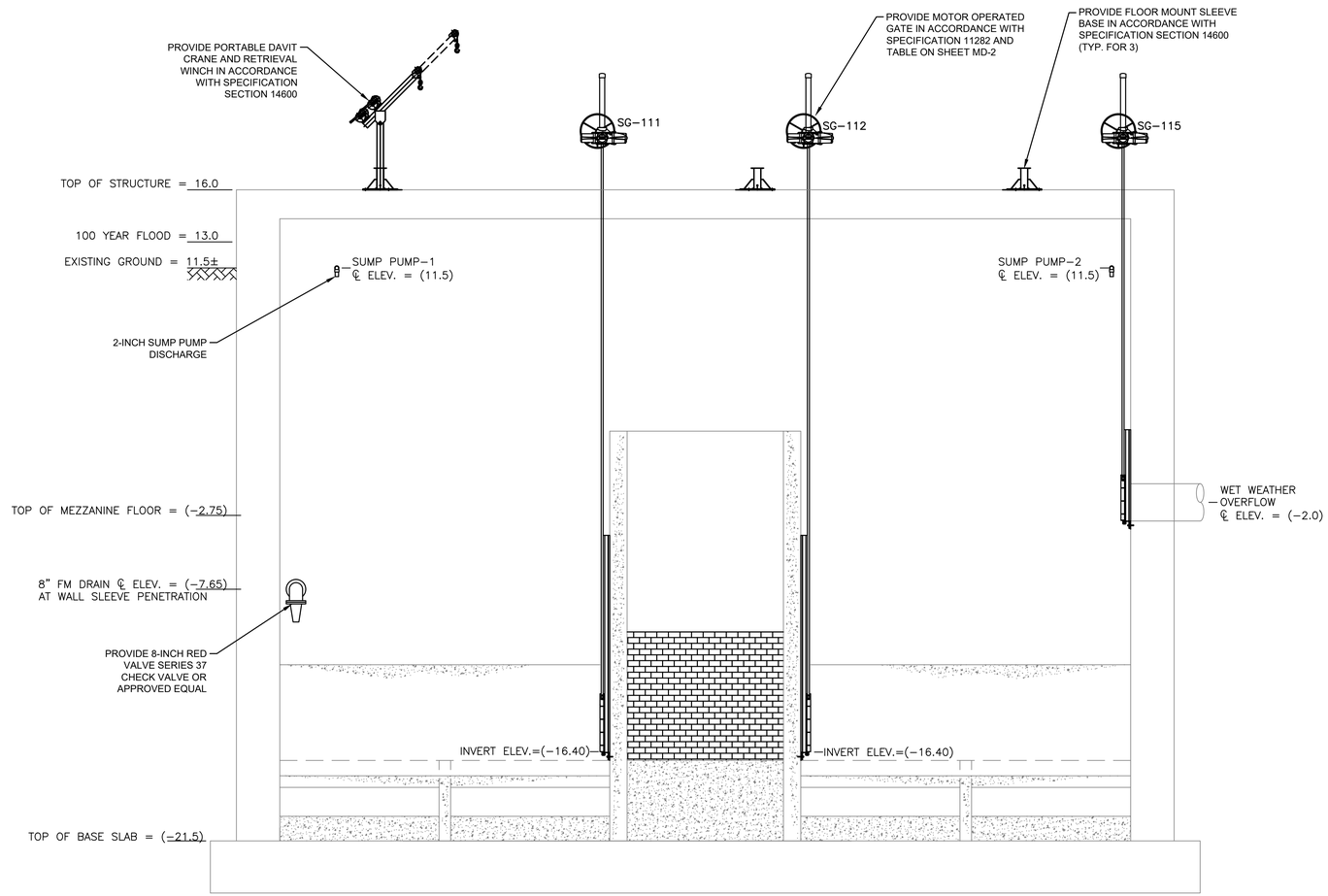

PROPOSED SECTION CC M-1

SCALE: 1/4 " = 1'

PREPARED BY

BETA

www.BETA-Inc.com

REGISTERED PROFESSIONAL

COMMONWEALTH OF MASSACHUSETTS
JOSEPH FEDERICO, JR.
No. 30863
REGISTERED PROFESSIONAL ENGINEER

SUBCONSULTANT

PROJECT

MAIN LIFT PUMP STATION IMPROVEMENTS

TAUNTON, MA

TITLE

SECTION C-C

NO.	REVISIONS	DATE

DRAWN BY:	BM
DESIGNED BY:	AJG
CHECKED BY:	CC
ISSUE DATE:	3/31/2022
BETA JOB NO.:	5530

SCALE

AS SHOWN

UNLESS OTHERWISE NOTED OR CHANGED BY REPRODUCTION

SHEET NO.

M-6

3/28/2022 11:01 AM J:\TAUNTON\MAIN LIFT PUMP STATION\AUTOCAD\DRAWINGFILES\CONTRACT 3 - MAIN LIFT PS BUILDOUT CONTRACT\MECHANICAL - SECTIONS.DWG

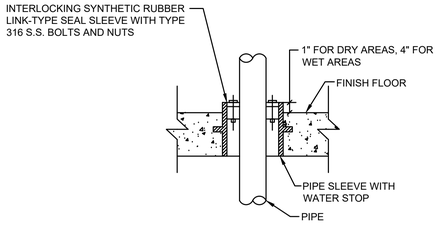

NOTE: FOR FLOOR SLEEVES, WHERE GASTIGHT OR WATERTIGHT SEALS ARE NOT REQUIRED, THE SEAL MAY BE OMITTED

FLOOR SLEEVE/NEW CONCRETE

SCALE: NOT TO SCALE

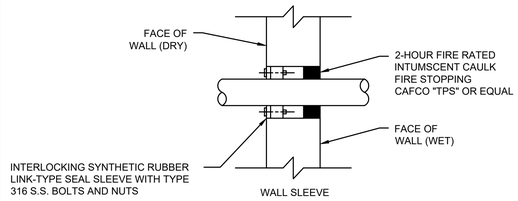

PENETRATION FOR CORED HOLES IN EXISTING WALLS INTO WET AREAS

SCALE: NOT TO SCALE

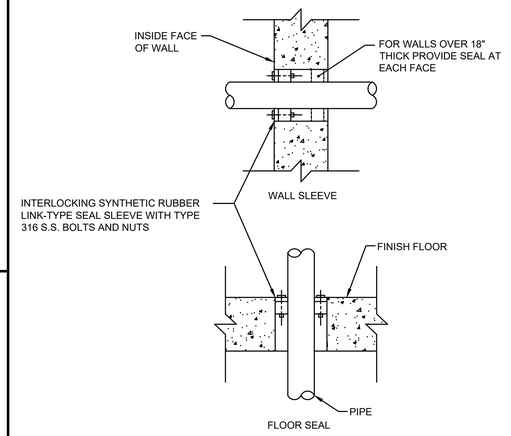

PENETRATION FOR CORED HOLES IN EXISTING WALLS AND DRY AREAS

SCALE: NOT TO SCALE

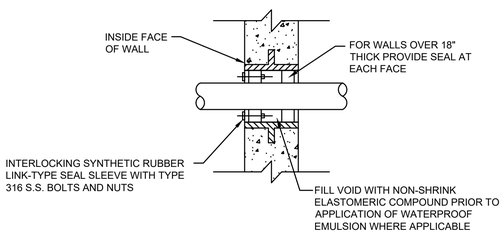

WALL SLEEVE/NEW CONCRETE

SCALE: NOT TO SCALE

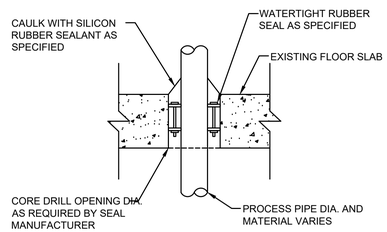

FLOOR PENETRATION FOR CORED HOLES IN WET AREAS

SCALE: NOT TO SCALE

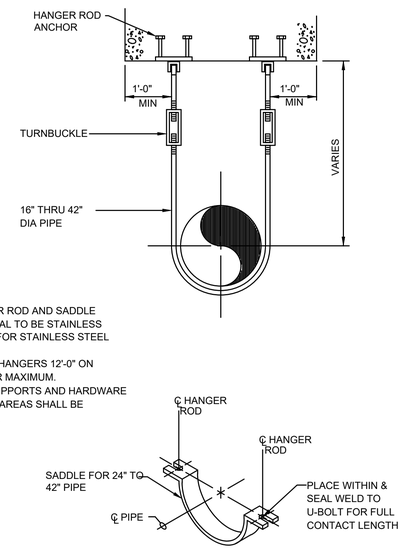

NOTES:

1. HANGER ROD AND SADDLE MATERIAL TO BE STAINLESS STEEL FOR STAINLESS STEEL PIPE.
2. SPACE HANGERS 12'-0" ON CENTER MAXIMUM.
3. PIPE SUPPORTS AND HARDWARE IN WET AREAS SHALL BE 316 S.S.

PIPE HANGER

SCALE: NOT TO SCALE

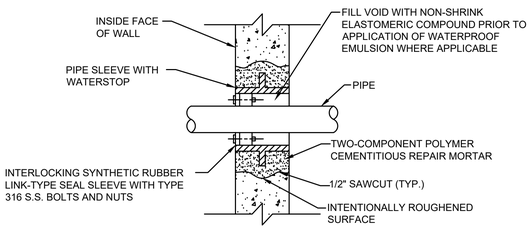

WALL SLEEVE/EXISTING WALL

SCALE: NOT TO SCALE

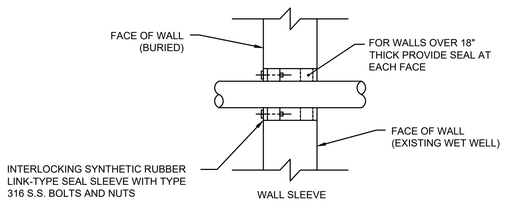

PENETRATION FOR CORED HOLES IN EXISTING WALLS INTO EXISTING WET WELL

SCALE: NOT TO SCALE

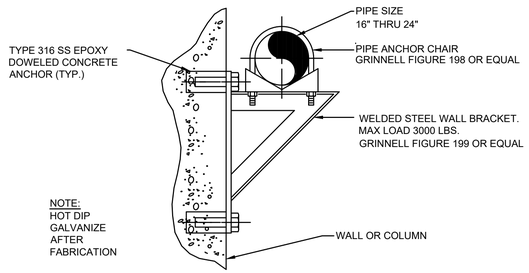

NOTE:
HOT DIP GALVANIZE AFTER FABRICATION

PIPE SUPPORT–HEAVY

SCALE: NOT TO SCALE

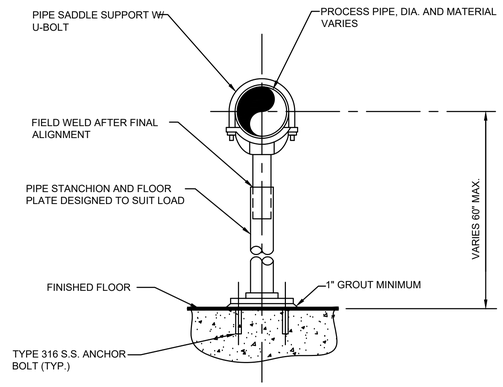

NOTES:

1. PROVIDE HALF-ROUND RIGID INSULATION WAND INSULATION SHIELD FOR INSULATED PIPING.
2. PROVIDE NEOPRENE ISOLATION PAD UNDER SUPPORT FOOT FOR ISOLATED PIPING OR WHEN SUPPORT IS ADJACENT TO MECHANICAL EQUIPMENT.
3. PIPE SUPPORTS AND HARDWARE IN WET AREAS SHALL BE 316 S.S.

GRINNELL FIGURE 259 OR EQUAL

FLOOR PIPE SUPPORT

SCALE: NOT TO SCALE

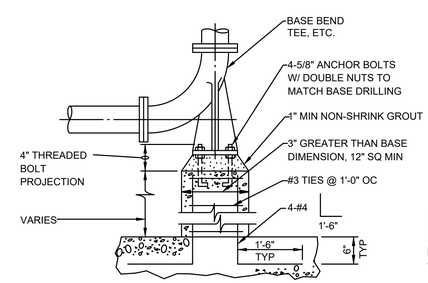

NOTE:
ALSO USE FOR SUPPORT OF HORIZONTAL TEE OR CROSS

BASE BEND

SCALE: NOT TO SCALE

PREPARED BY

BETA
www.BETA-Inc.com

REGISTERED PROFESSIONAL

COMMONWEALTH OF MASSACHUSETTS
JOSEPH FEDERICO, JR.
No. 30863
REGISTERED PROFESSIONAL ENGINEER

SUBCONSULTANT

PROJECT

MAIN LIFT PUMP STATION IMPROVEMENTS

TAUNTON, MA

TITLE

MECHANICAL DETAILS I

NO.	REVISIONS	DATE

DRAWN BY:	BM
DESIGNED BY:	AJG
CHECKED BY:	CC
ISSUE DATE:	3/31/2022
BETA JOB NO.:	5530

SCALE

AS SHOWN

UNLESS OTHERWISE NOTED OR CHANGED BY REPRODUCTION

SHEET NO.

MD-1

3/28/2022 11:01 AM J:\TAUNTON\MAIN LIFT PUMP STATION\AUTOCAD\DRAWINGFILES\CONTRACT 3 - MAIN LIFT PS BUILDOUT CONTRACT\DETAILS - MECHANICAL DWG

PUMP SCHEDULE										
			CAPACITY		MOTOR					
PUMP TAG	PUMPS CONFIGURATION	NO. REQUIRED	FLOW, GPM	TDH (FT)	POWER	PUMP SPEED, (RPM)	DISCHARGE SIZE (IN.)	TYPE	MINIMUM EFFICIENCY AT DESIGN POINT (%)	SHUT OFF HEAD, (FT)
RSP-101 TO RSP-105	SINGLE PUMP OPERATION	5	4,700 PER PUMP	59	115 HP	1,200	12-INCH	DRY PIT SUBMERSIBLE	74%	124

VALVE SCHEDULE PUMP STATION SITE							
VALVE TAG	NO. REQUIRED	VALVE TYPE	SIZE	MATERIAL	ACTUATOR	LOCATION	CONNECTION
CV-1 TO CV-5	5	SWING CHECK	16	CAST IRON	WEIGHTED LEVER	BASEMENT LEVEL	FL X FL
GV-1S TO GV-5S	5	GATE VALVE	18	DUCTILE IRON	MANUAL	BASEMENT LEVEL	FL X FL
PV-1A TO PV-5A	5	PLUG VALVE	16	CAST IRON	MANUAL	BASEMENT LEVEL	FL X FL
PV-1B TO PV-5B	5	PLUG VALVE	16	CAST IRON	MANUAL	MEZZANINE LEVEL	FL X FL
AR-1	1	PLUG VALVE	6	CAST IRON	MANUAL	MEZZANINE LEVEL	FL X FL
DR-A & DR-B	2	PLUG VALVE	8	CAST IRON	MANUAL	MEZZANINE & BASEMENT	FL X FL

GATE SCHEDULE								
GATE TAG	TYPE	CHANNEL WIDTH (IN)	GATE HEIGHT (IN)	GATE MATERIAL	MOUNTING TYPE	OPERATOR	OPENING INVERT ELEV. (FT)	OPERATING FLOOR ELEV. (FT)
SG-111	SELF CONTAINED RISING STEM	36	72	316 SS	WALL MOUNTED	MOTOR	(-16.40)	16.0
SG-112	SELF CONTAINED RISING STEM	36	72	316 SS	WALL MOUNTED	MOTOR	(-16.40)	16.0
SG-113	SELF CONTAINED RISING STEM	24	24	316 SS	WALL MOUNTED	MOTOR	(-20.00)	16.0
SG-114	SELF CONTAINED RISING STEM	24	24	316 SS	WALL MOUNTED	MOTOR	(-20.00)	16.0
SG-115	SELF CONTAINED RISING STEM	24	24	316 SS	WALL MOUNTED	MOTOR	(-3.00)	16.0

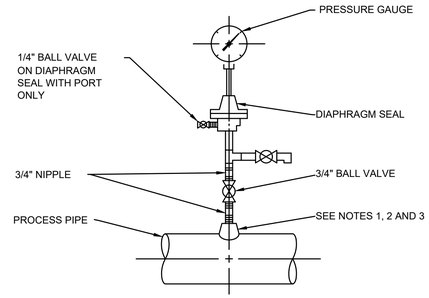

DIAPHRAGM PRESSURE GAUGE

NOTES:

1. FOR STEEL, GALVANIZED STEEL, AND PVC 2 1/2" AND SMALLER USE A BUSHING IN A TEE.
2. FOR DUCTILE IRON AND FIBERGLASS REINFORCED PLASTIC PIPE, ALL SIZES, USE PIPE SADDLE WITH BUSHING.
3. FOR STEEL AND STAINLESS STEEL PIPES 3" AND LARGER, AND PRESSURE VESSELS, USE THRED-O-LET AS SHOWN.
4. PROVIDE SNUBBER FOR POSITIVE DISPLACEMENT PUMP INSTALLATIONS.
5. FOR WASTEWATER, SLUDGE, SCUM AND GRIT PIPING UTILIZE THE DIAPHRAGM PRESSURE GAUGE.

PRESSURE GAUGE MOUNTING DETAILS

SCALE: NOT TO SCALE

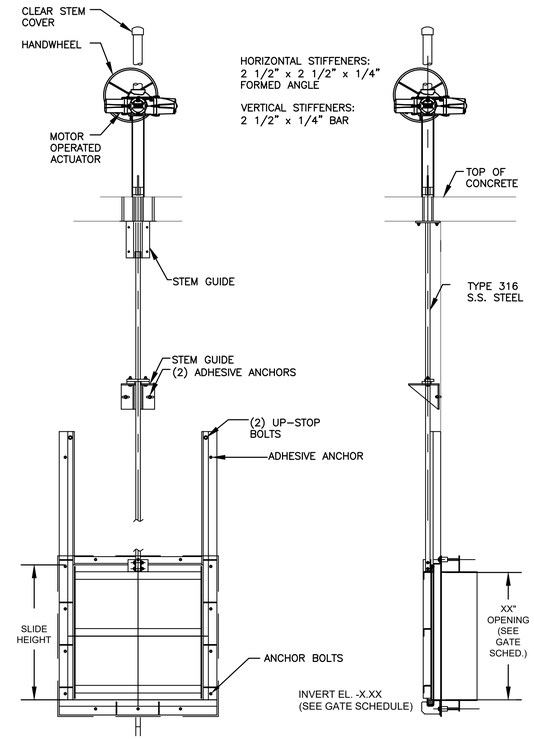

MAIN LIFT SLUICE GATE

NOT TO SCALE

PREPARED BY

BETA

www.BETA-Inc.com

REGISTERED PROFESSIONAL

COMMONWEALTH OF MASSACHUSETTS
JOSEPH FEDERICO, JR.
No. 30863
REGISTERED PROFESSIONAL ENGINEER

SUBCONSULTANT

PROJECT

MAIN LIFT PUMP STATION IMPROVEMENTS

TAUNTON, MA

TITLE

MECHANICAL DETAILS II

NO.	REVISIONS	DATE

DRAWN BY:	BM
DESIGNED BY:	AJG
CHECKED BY:	CC
ISSUE DATE:	3/31/2022
BETA JOB NO.:	5530

SCALE

AS SHOWN

UNLESS OTHERWISE NOTED OR CHANGED BY REPRODUCTION

SHEET NO.

MD-2

3/28/2022 11:01 AM J:\TAUNTON\MAIN LIFT PUMP STATION\AUTOCAD\DRAWINGFILES\CONTRACT 3 - MAIN LIFT PS BUILDOUT CONTRACT\DETAILS - MECHANICAL.DWG

GENERAL NOTES

1. HVAC WORK IS INDICATED DIAGRAMMATICALLY. EXACT LOCATIONS OF ALL COMPONENTS ARE TO BE DETERMINED IN THE FIELD AND BY THE ACTUAL BUILDING CONDITIONS. EXISTING DUCTS, PIPING OR EQUIPMENT INTERFERING WITH OTHER INSTALLATIONS SHALL BE RELOCATED AS REQUIRED AT NO ADDITIONAL COST TO THE OWNER. EXACT LOCATIONS MUST HAVE THE APPROVAL OF THE ARCHITECT.
2. ALL WORK SHALL BE COORDINATED WITH ALL OTHER TRADES BEFORE ANY INSTALLATION IS MADE.
3. ALL EQUIPMENT SHALL BE INSTALLED IN ACCORDANCE WITH STATE CODES, MANUFACTURER'S APPROVED PUBLISHED LITERATURE, AND AUTHORITIES HAVING JURISDICTION.
4. INSTALLATION OF EQUIPMENT SHALL PERMIT ACCESSIBILITY FOR SERVICE AND/ OR REPLACEMENT.
5. ALL CEILING MOUNTED EQUIPMENT SHALL BE INSTALLED IN SUCH A WAY THAT LIGHTS, PIPING, AND DUCTWORK DO NOT BLOCK ACCESS TO UNITS AND RELATED ACCESSORIES.
6. HVAC CONTRACTOR SHALL COORDINATE ALL WALL, CEILING, FLOOR, ROOF AND BEAM PENETRATIONS WITH ARCHITECT AND STRUCTURAL ENGINEER.
7. ALL DUCT SIZES SHOWN ARE NET INSIDE CLEAR DIMENSIONS.
8. PROVIDE VOLUME DAMPERS AT EVERY MAIN BRANCH TAKE-OFF AND AS INDICATED AND IN SUCH OTHER LOCATIONS WHERE REQUIRED TO PROPERLY BALANCE THE SYSTEM. DO NOT INSTALL VOLUME DAMPERS IN NECKS OF DIFFUSERS OR AT DISCHARGE OR INLET GRILLES IN DUCTWORK.
9. PROVIDE INSTRUMENT TEST HOLES WITH CAPS IN AIR DISTRIBUTION SYSTEMS AS REQUIRED TO BALANCE SYSTEM.
10. HVAC CONTRACTOR SHALL BE RESPONSIBLE FOR ALL SHEETMETAL TRANSITIONS AT AIR TERMINAL UNITS, FANS, COILS, AND OTHER SIMILAR HVAC EQUIPMENT.
11. ALL OPEN ENDED DUCTS IN THE CEILING PLENUM SHALL BE UNOBSTRUCTED FOR A MINIMUM DISTANCE OF 24" FROM THE OPENING TO ALLOW FREE AIR FLOW AND SHALL HAVE 3/4" WIRE MESH SCREENING.
12. ALL MISCELLANEOUS STRUCTURAL SUPPORTS REQUIRED FOR HVAC EQUIPMENT INSTALLATION SHALL BE PROVIDED BY HVAC SUBCONTRACTOR.
13. EXACT LOCATION OF CEILING DIFFUSERS, GRILLES AND REGISTERS TO BE DETERMINED BY ARCHITECTURAL REFLECTED CEILING PLAN.
14. INSTALL ALL PIPING BELOW DUCTWORK UNLESS CLEARANCE CONDITION REQUIRES PIPING TO BE ABOVE.
15. EXACT ELEVATION FOR SIDE WALL DIFFUSERS, REGISTERS AND GRILLES SHALL BE APPROVED BY THE ARCHITECT BEFORE INSTALLATION.
16. UNLESS OTHERWISE NOTED, ALL PIPING RUNOUTS SHALL BE 3/4"
17. ALL EXPOSED EQUIPMENT (REGISTERS, UNIT HEATERS, ETC..) SHALL HAVE COLORS SELECTED BY THE ARCHITECT, UNLESS NOTED OTHERWISE.
18. HVAC SUBCONTRACTOR SHALL BLANK OFF AND INSULATE ALL UNUSED LOUVER AREA.
19. PITCH AIR INTAKE PLENUMS AND PROVIDE DRAIN TO NEAREST FLOOR DRAIN.
20. ALL REGISTERS, GRILLES AND DIFFUSERS LOCATED IN WALLS NEAR FLOOR SHALL BE HEAVY-DUTY TYPE DESIGNED TO WITHSTAND RUGGED IMPACT. REFER TO SCHEDULE. THE SECTION OF DUCTWORK BEHIND THE AIR DEVICE SHALL BE PAINTED FLAT BLACK.
21. EXACT LOCATION OF THERMOSTAT TO BE COORDINATED WITH FINAL LOCATION OF WALL MOUNTED ARCHITECTURAL AND ELECTRICAL EQUIPMENT.
22. PROVIDE FLEXIBLE CONNECTOR ON INTAKES AND DISCHARGES OF ALL AIR HANDLING UNITS.
23. ROOF OPENINGS SHALL BE SIZED FROM APPROVED SHOP DRAWINGS.
24. ALL DAMPER MOTORS SHALL BE 24 VOLT.

ABBREVIATIONS

ACD	AUTOMATIC CONTROL DAMPER
AD	ACCESS DOOR
AFF	ABOVE FINISHED FLOOR
AHAP	AS HIGH AS POSSIBLE
AP	ACCESS PANEL
ARCH	ARCHITECT
ATC	AUTOMATIC TEMPERATURE CONTROL
BDD	BACKDRAFT DAMPER
BTU	BRITISH THERMAL UNIT
BTUH	BRITISH THERMAL UNIT PER HOUR
BOD	BOTTOM OF DUCT
CAP	CAPACITY
CD	CEILING DIFFUSER
CFM	CUBIC FEET PER MINUTE
CO	CLEANOUT
CONT	CONTROLLER
CP	CUT AND CAP
DIA	DIAMETER
DB	DRY BULB TEMPERATURE
DC	DUST COLLECTOR
DDC	DIRECT DIGITAL CONTROL
DN	DOWN
DWG	DRAWING
DX	DIRECT EXPANSION COOLING
EA	EXHAUST AIR
EAT	ENTERING AIR TEMPERATURE
EBB	ELECTRIC BASEBOARD RADIATION
ECH	ELECTRIC CABINET HEATER
ECON	AIR-SIDE ECONOMIZER
EF	EXHAUST FAN
EFF	EFFICIENCY
ELV	ELEVATION
ER	EXHAUST REGISTER
ESP	EXTERNAL STATIC PRESSURE
ETR	EXISTING TO REMAIN
EWT	ENTERING WATER TEMPERATURE
EXH	EXHAUST
FA	FREE AREA
FD	FIRE DAMPER
FLA	FULL LOAD AMPS
FOB	FLAT ON BOTTOM
FOT	FLAT ON TOP
FPI	FINS PER INCH
FPM	FEET PER MINUTE
FT	FEET
FTR	FINNED TUBE RADIATION
GAL	GALLONS
GALV	GALVANIZED
GC	GENERAL CONTRACTOR
GF	GLYCOL FEED
GPM	GALLONS PER MINUTE
HP	HORSEPOWER
HVAC	HEATING, VENTILATING AND AIR CONDITIONING
HGRH	HOT GAS REHEAT
HW	HOT WATER
HZ	HERTZ
IN	INCHES
KE	KITCHEN EXHAUST
KW	KILOWATTS
LAT	LEAVING AIR TEMPERATURE
LD	LINEAR DIFFUSER
LF	LINEAR FEET
LWT	LEAVING WATER TEMPERATURE
MBH	THOUSANDS OF BTU'S PER HOUR
MCC	MOTOR CONTROL CENTER
NC	NORMALLY CLOSED
NIC	NOT IN CONTRACT
NO	NORMALLY OPEN
NTS	NOT TO SCALE
OA	OUTSIDE AIR
OAT	OUTSIDE AIR TEMPERATURE
OBD	OPPOSED BLADE DAMPER
OD	OUTSIDE DIAMETER
OED	OPEN ENDED DUCT
POS	PROVIDED UNDER OTHER SECTIONS
PSI	POUNDS PER SQUARE INCH (GAUGE)
PD	PRESSURE DROP
PRV	PRESSURE REDUCING VALVE
PG	PROPYLENE GLYCOL
R	RETURN
RA	RETURN AIR
RB	REBALANCE
RF	RETURN/EXHAUST FAN
RG	RETURN GRILLE
RM	ROOM
RPM	REVOLUTIONS PER MINUTE
RR	RETURN REGISTER
S	SUPPLY
SA	SUPPLY AIR
SAT	SUPPLY AIR TEMPERATURE
SF	SQUARE FEET, SUPPLY FAN
SP	STATIC PRESSURE
SR	SUPPLY REGISTER
SS	STAINLESS STEEL
STL	STEEL
TYP	TYPICAL
UC	UNDERCUT DOOR
V	VOLTS
VAV	VARIABLE AIR VOLUME
VD	VOLUME DAMPER
VFD	VARIABLE FREQUENCY DRIVE
W/	WITH
W/O	WITHOUT
WB	WET BULB TEMPERATURE
WG	WATER GAUGE
WMS	WIRE MESH SCREEN

PIPING LEGEND

—CD— CONDENSATE DRAIN

EQUIPMENT TAG SYMBOLS & ABBREVIATIONS

EQUIPMENT NOT REQUIRING ELECTRIC SERVICE → TAG / NO → SEE SCHEDULE FOR PERFORMANCE REQUIREMENTS ← TAG / NO ← EQUIPMENT REQUIRING ELECTRIC SERVICE

AF	AIR FILTER
EF	EXHAUST FAN
ERU	ENERGY RECOVERY UNIT
EUH	ELECTRIC UNIT HEATER
FCU	FAN COIL UNIT
FMS	FLOW MEASURING STATION
HC	HEATING COIL
HV	HEATING AND VENTILATING UNIT
IRV	INTAKE ROOF VENT
MAU	MAKEUP AIR UNIT
REF	RETURN/EXHAUST FAN
RF	RETURN FAN
SF	SUPPLY FAN

INSTRUMENTATION

PI	LOCAL PRESSURE GAUGE W/SHUTOFF AND SNUBBER
DPI	DIFFERENTIAL PRESSURE GAUGE W/SHUTOFFS AND SNUBBERS
TI	LOCAL TEMPERATURE INDICATION
Th	HEATING ONLY THERMOSTAT
Tc	COOLING ONLY THERMOSTAT
T	HEATING/COOLING THERMOSTAT
TT	TEMPERATURE TRANSMITTER
PT	PRESSURE TRANSMITTER
SD	SMOKE DETECTOR
HD	HEAT DETECTOR
FT	FLOW TRANSMITTER
SP	STATIC PRESSURE SENSOR
H	HUMIDITY SENSOR OR HUMIDISTAT
CO2	CARBON DIOXIDE DETECTOR
CO	CARBON MONOXIDE DETECTOR
OS	OCCUPANCY SENSOR
PS	PRESSURE SENSOR SWITCH
S	OCCUPIED/UNOCCUPIED SWITCH

DUCTWORK LEGEND/SYMBOLS

12"x"10	RECTANGULAR DUCTWORK – FIRST DIMENSION IS SIDE SHOWN (IN.) FREE AREA
12"ø	ROUND DUCT DIAMETER (IN.)
	SUPPLY/OUTSIDE AIR DUCTWORK UP
	SUPPLY/OUTSIDE AIR DUCTWORK DOWN
	RETURN/EXHAUST AIR DUCTWORK UP
	RETURN/EXHAUST AIR DUCTWORK DOWN
	FLEXIBLE CONNECTION
	ACOUSTICALLY LINED DUCTWORK
R	CHANGE OF ELEVATION IN DIRECTION OF AIRFLOW (R)RISE,(D)DROP
12x10	RECTANGULAR DUCT TRANSITION
12x10 / 8x6	RECTANGULAR TO SINGLE LINE TRANSITION
12x10 / 10ø	RECTANGULAR TO ROUND TRANSITION
	MITERED ELBOW W/ TURNING VANES
	SUPPLY AIR DIFFUSER BELOW DUCT
	RETURN OR EXHAUST REGISTER BELOW DUCT
	ROUND DUCT UP
	SUPPLY AIR DIFFUSER (SQUARE OR RECTANGULAR)
	RETURN AIR GRILLE OR REGISTER
VD	MANUAL VOLUME DAMPER
ACD	AUTOMATIC CONTROL DAMPER
	SUPPLY AIR BLOW DIRECTION
	EXHAUST / RETURN / OR INTAKE

DIFFUSER/REGESTER TAG

TT-X	TYPE-BLOW (CD-1 = CEILING DIFFUSER, 1 WAY BLOW)
0000	CFM

	INLINE CENTRIFUGAL FAN
	ROOF FAN OR VENT

SEQUENCE OF OPERATION

1. ERV-1: SEE SPECIFICATIONS.
2. ELECTRICAL UNIT HEATERS:
   EUH FAN AND HEATING COIL SHALL CYCLE FROM WALL MOUNTED THERMOSTAT TO MAINTAIN SPACE TEMPERATURE SETPOINT.
3. DEHUMIDIFIER:
   DEHUMIDIFIER SHALL CYCLE FROM INTERNAL HUMIDISTAT TO MAINTAIN A SPACE RELATIVE HUMIDITY OF 40%.
4. HEAT PUMP:
   HEAT PUMP SHALL CYCLE FROM A WALL MOUNTED PROGRAMMABLE THERMOSTAT TO MAINTAIN ROOM SETPOINTS OF 65°F AND 85°F COOLING

PREPARED BY

BETA
www.BETA-Inc.com

REGISTERED PROFESSIONAL

COMMONWEALTH OF MASSACHUSETTS
ROBERTA L. BROWN
MECHANICAL
No. 43326
REGISTERED PROFESSIONAL ENGINEER

SUBCONSULTANT

S&R ENGINEERING, INC.

Mechanical/Electrical Engineers
150 Grossman Drive, Suite 309
Braintree, Massachusetts 02184
617 221-9220
web: www.sar.com

PROJECT

MAIN LIFT

PUMP STATION

TAUNTON, MA

TITLE

HVAC
LEGEND &
GENERAL
NOTES

NO.	REVISIONS	DATE

DRAWN BY:	RLB
DESIGNED BY:	RHB
CHECKED BY:	RHB
ISSUE DATE:	03/31/22
BETA JOB NO.:	5530-000

SCALE

UNLESS OTHERWISE NOTED OR CHANGED BY REPRODUCTION

For Review Only

SHEET NO.

H-1

1/21/2022 10:14 AM W:\YEAR - 2017\17003.00 - TAUNTON MAIN LIFT PUMP STATION\HVAC DEPARTMENT\17003.00 HVAC PLAN.DWG

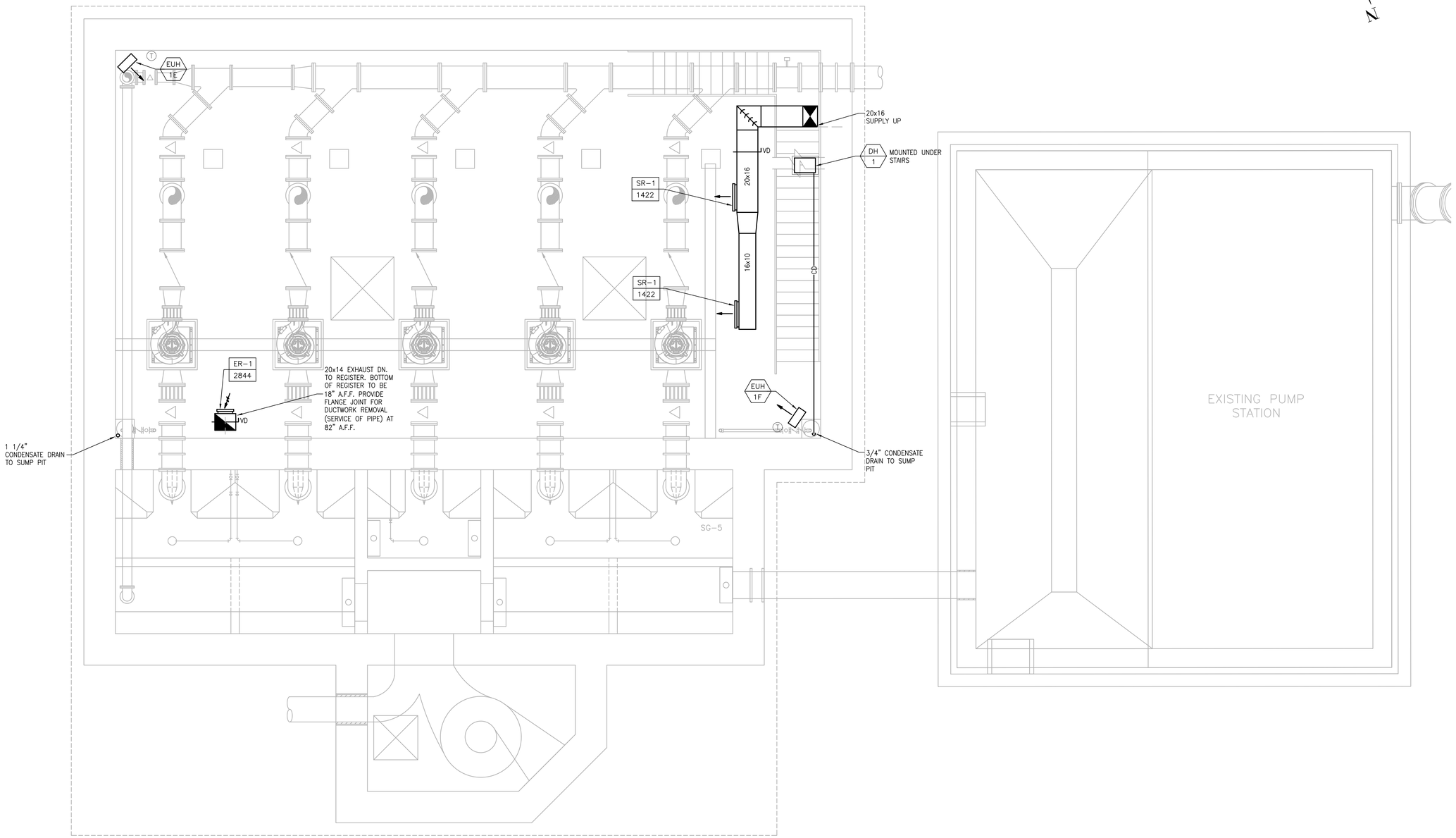

PLAN & SECTIONS - PROPOSED

SCALE: 1/4 " = 1'

PREPARED BY

BETA
www.BETA-Inc.com

REGISTERED PROFESSIONAL

COMMONWEALTH OF MASSACHUSETTS
ROBERT H. BROWN
MECHANICAL
No. 43205
REGISTERED PROFESSIONAL ENGINEER

SUBCONSULTANT

S-A-R
ENGINEERING, INC.

Mechanical/Electrical Engineers
150 Grossman Drive, Suite 309
Braintree, Massachusetts 02184
617 221-9220
web: www.sar.com

PROJECT

MAIN LIFT

PUMP STATION

TAUNTON, MA

TITLE

HVAC
BASEMENT
LEVEL PLAN

NO.	REVISIONS	DATE

DRAWN BY:	RLB
DESIGNED BY:	RHB
CHECKED BY:	RHB
ISSUE DATE:	03/31/22
BETA JOB NO.:	5530-000

SCALE

UNLESS OTHERWISE NOTED OR CHANGED BY REPRODUCTION

For Review Only

SHEET NO.

H-2

1/21/2022 10:14 AM W:\YEAR - 2017\17003.00 - TAUNTON MAIN LIFT PUMP STATION\HVAC DEPARTMENT\17003.00 HVAC PLAN.DWG

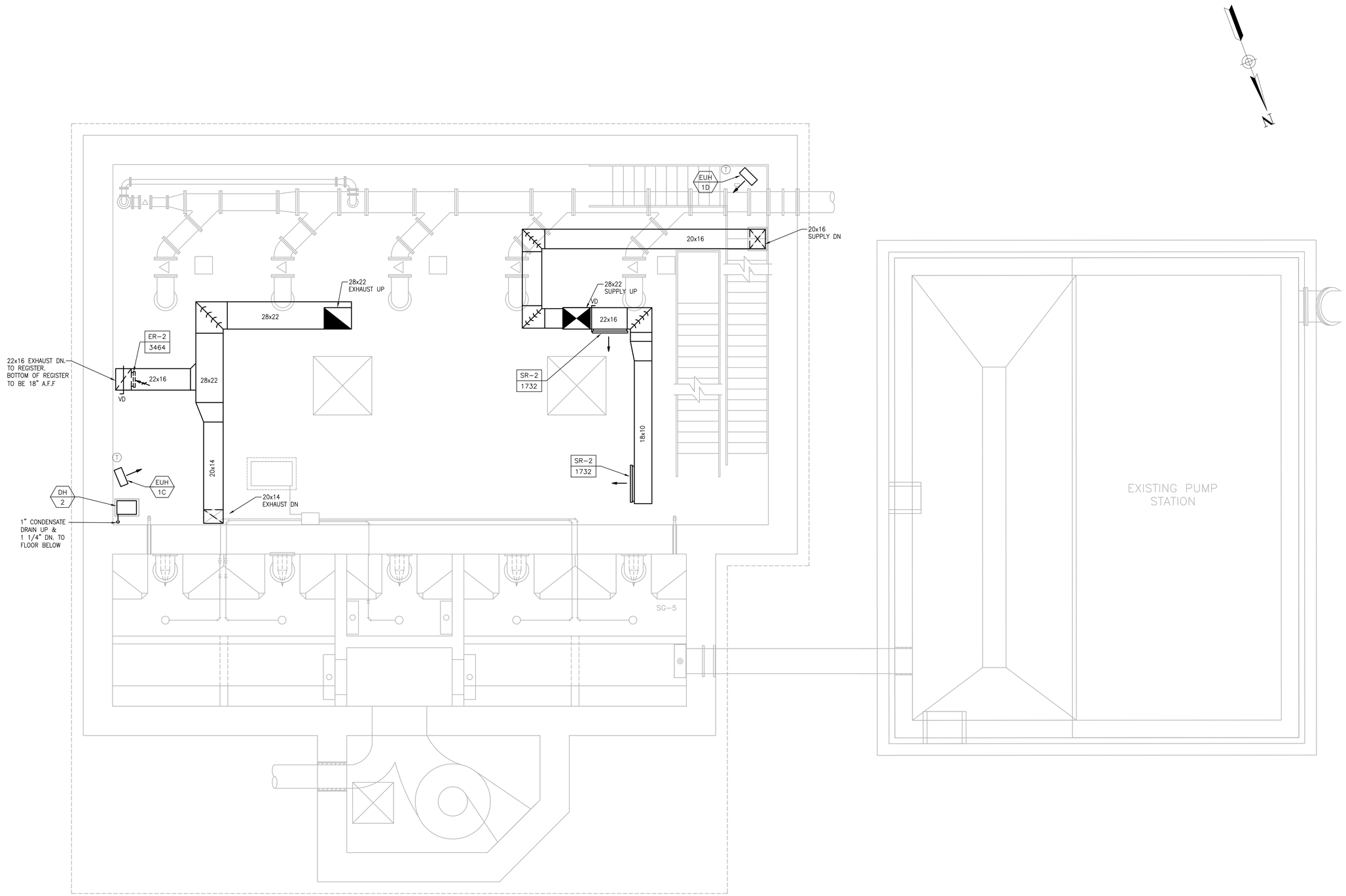

MEZZANINE LEVEL PLAN

SCALE: 1/4 " = 1'

PREPARED BY

BETA
www.BETA-Inc.com

REGISTERED PROFESSIONAL

COMMONWEALTH OF MASSACHUSETTS
ROBERT H. BROWN
MECHANICAL
NO. 43035
REGISTERED PROFESSIONAL ENGINEER

SUBCONSULTANT

SAR ENGINEERING, INC.

Mechanical/Electrical Engineers
150 Grossman Drive, Suite 309
Braintree, Massachusetts 02184
617 221-9220
web: www.sar.com

PROJECT

MAIN LIFT

PUMP STATION

TAUNTON, MA

TITLE

HVAC
MEZZANINE
LEVEL PLAN

NO.	REVISIONS	DATE

DRAWN BY:	RLB
DESIGNED BY:	RHB
CHECKED BY:	RHB
ISSUE DATE:	03/31/22
BETA JOB NO.:	5530-000

SCALE

UNLESS OTHERWISE NOTED OR CHANGED BY REPRODUCTION

For Review Only

SHEET NO.

H-3

1/21/2022 10:14 AM W:\YEAR - 2017\17003.00 - TAUNTON MAIN LIFT PUMP STATION\HVAC DEPARTMENT\17003.00 HVAC PLAN.DWG

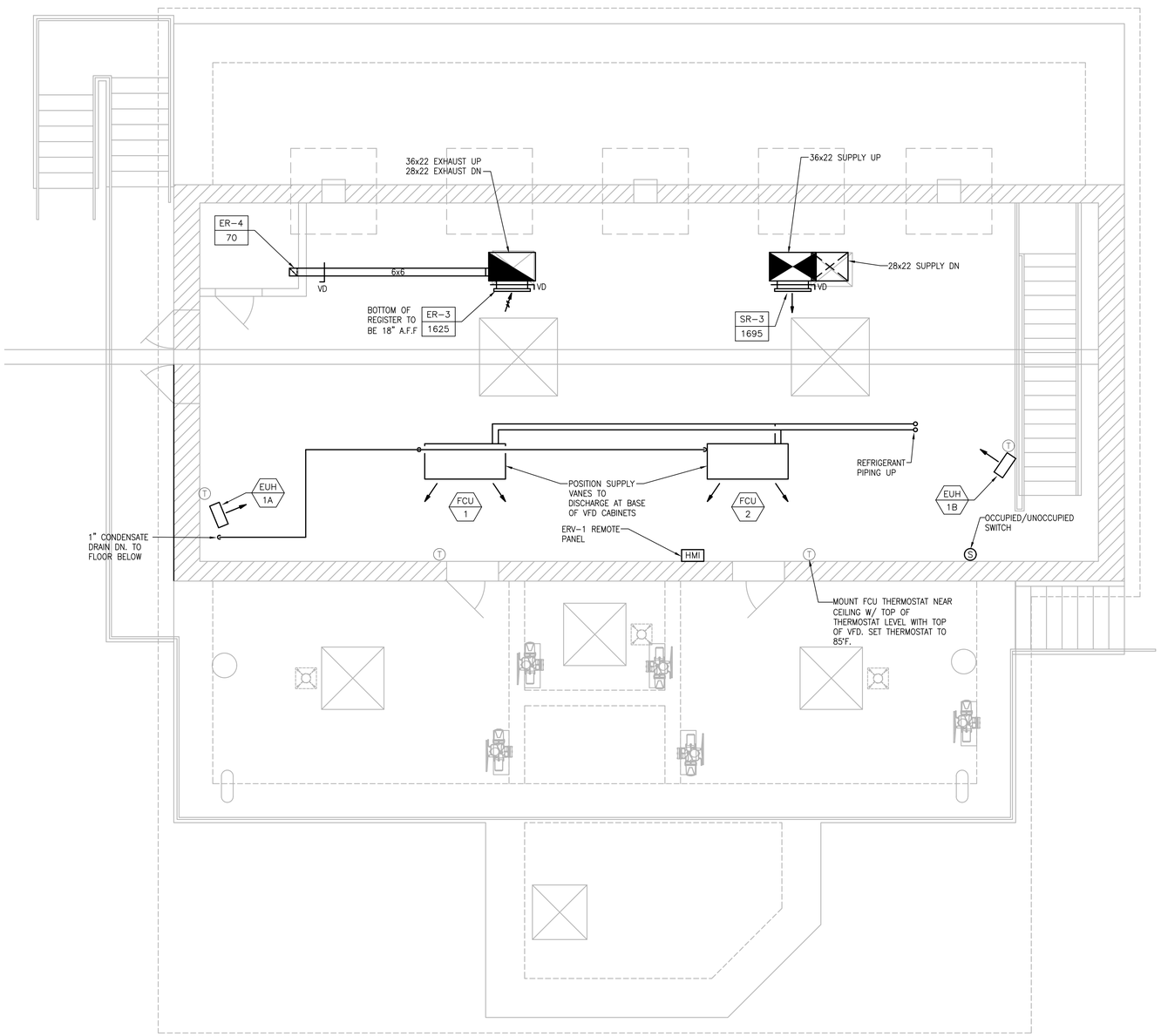

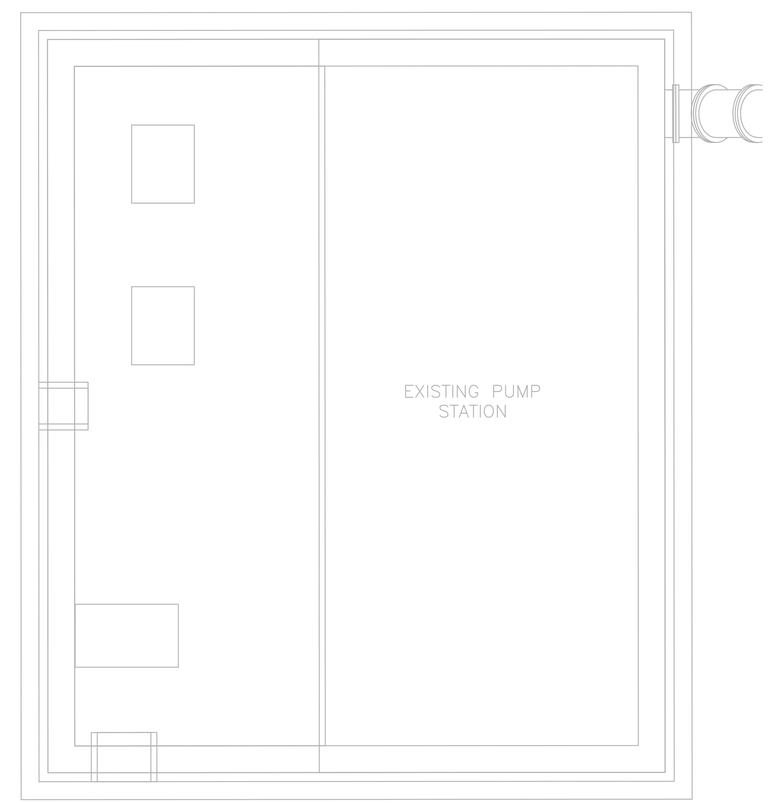

GROUND LEVEL PLAN
SCALE: 1/4 " = 1'

PREPARED BY

BETA
www.BETA-Inc.com

REGISTERED PROFESSIONAL

COMMONWEALTH OF MASSACHUSETTS
ROBERT A. BROWN
MECHANICAL
No. 43205
REGISTERED PROFESSIONAL ENGINEER

SUBCONSULTANT

S-A-R ENGINEERING, INC.

Mechanical/Electrical Engineers
150 Grossman Drive, Suite 309
Braintree, Massachusetts 02184
617 221-9220
web: www.sar.com

PROJECT

MAIN LIFT

PUMP STATION

TAUNTON, MA

TITLE

HVAC
GROUND
LEVEL PLAN

NO.	REVISIONS	DATE

DRAWN BY:	RLB
DESIGNED BY:	RHB
CHECKED BY:	RHB
ISSUE DATE:	03/31/22
BETA JOB NO.:	5530-000

SCALE

UNLESS OTHERWISE NOTED OR CHANGED BY REPRODUCTION

For Review Only

SHEET NO.
H-4

1/21/2022 10:14 AM W:\YEAR - 2017\17003.00 - TAUNTON MAIN LIFT PUMP STATION\HVAC DEPARTMENT\17003.00 HVAC PLAN.DWG

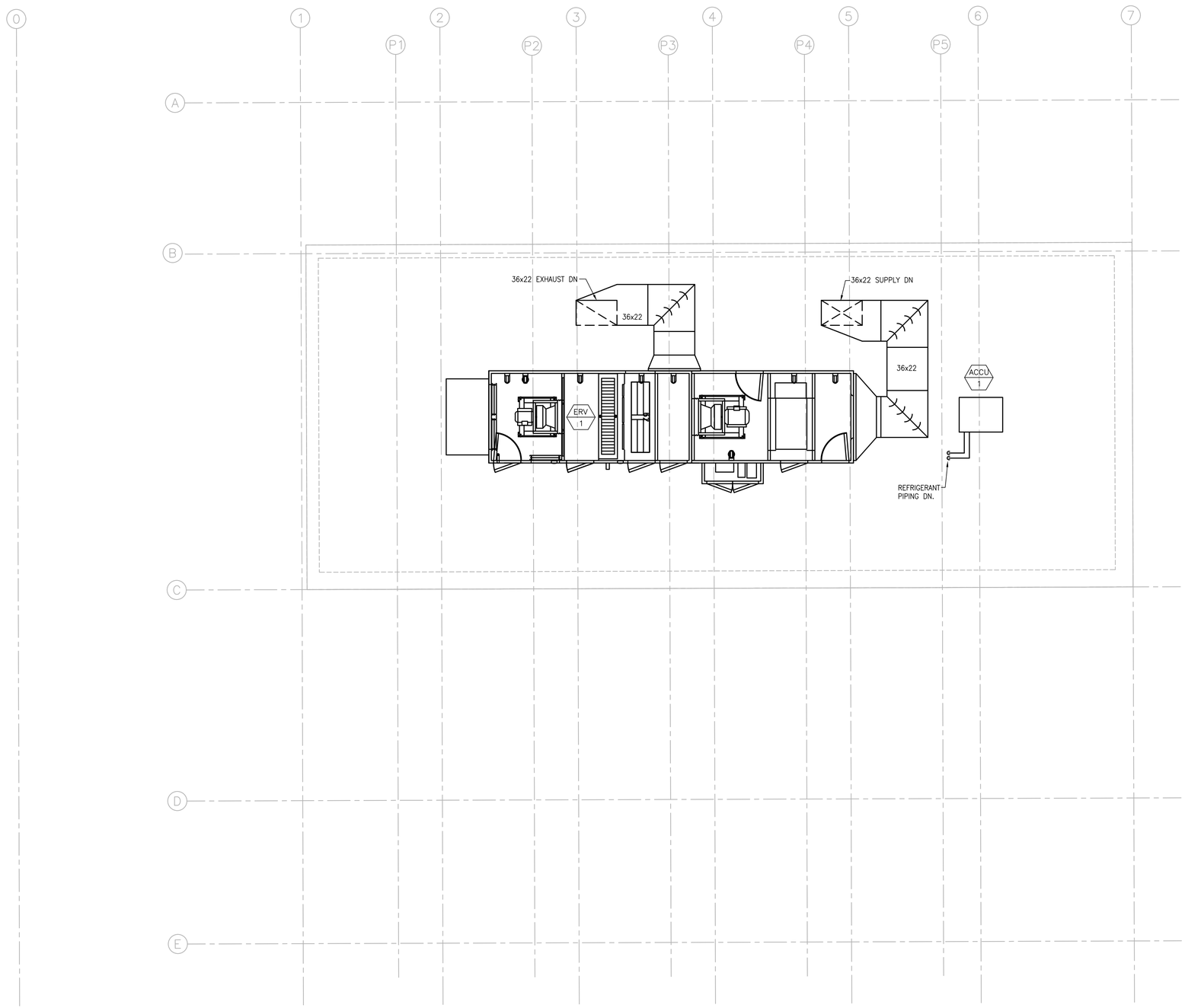

ROOF LEVEL PLAN

SCALE: 1/4 " = 1'

PREPARED BY

BETA
www.BETA-Inc.com

REGISTERED PROFESSIONAL

COMMONWEALTH OF MASSACHUSETTS
ROBERT A. BROWN
MECHANICAL
No. 43305
REGISTERED
PROFESSIONAL ENGINEER

SUBCONSULTANT

S-A-R
ENGINEERING, INC.

Mechanical/Electrical Engineers
150 Grossman Drive, Suite 309
Braintree, Massachusetts 02184
617 221-9220
web: www.sar.com

PROJECT

MAIN LIFT

PUMP STATION

TAUNTON, MA

TITLE

HVAC ROOF
LEVEL PLAN

NO.	REVISIONS	DATE

DRAWN BY:	RLB
DESIGNED BY:	RHB
CHECKED BY:	RHB
ISSUE DATE:	03/31/22
BETA JOB NO.:	5530-000

SCALE

UNLESS OTHERWISE NOTED OR CHANGED BY REPRODUCTION

For Review Only

SHEET NO.

H-5

1/21/2022 10:14 AM W:\YEAR - 2017\17003.00 - TAUNTON MAIN LIFT PUMP STATION\HVAC DEPARTMENT\17003.00 HVAC PLAN.DWG

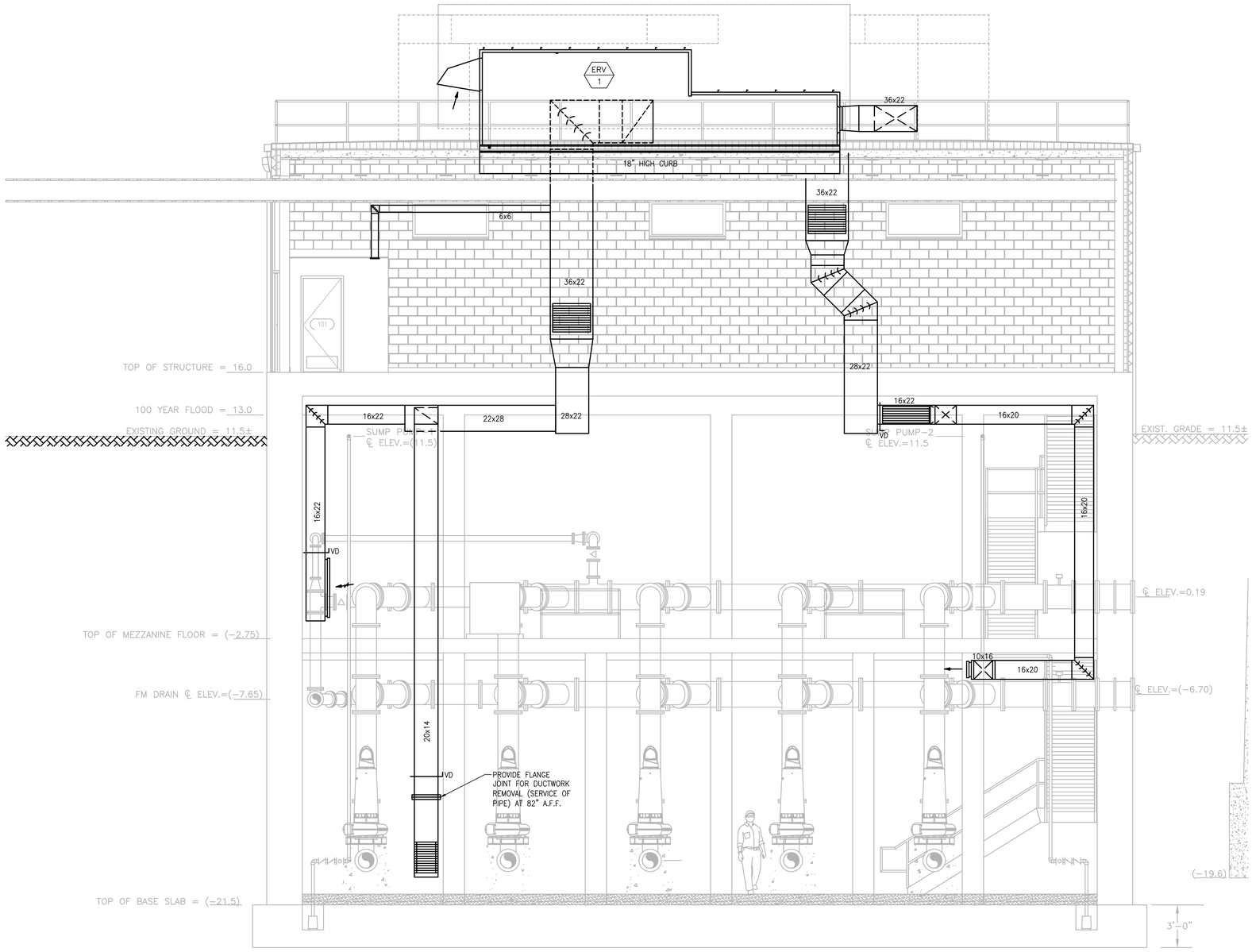

BUILDING SECTION

SCALE: 1/4 " = 1'

PREPARED BY

BETA
www.BETA-Inc.com

REGISTERED PROFESSIONAL

COMMONWEALTH OF MASSACHUSETTS
ROBERT A. BROWN
MECHANICAL
No. 43205
REGISTERED PROFESSIONAL ENGINEER

SUBCONSULTANT

SAR ENGINEERING, INC.

Mechanical/Electrical Engineers
150 Grossman Drive, Suite 309
Braintree, Massachusetts 02184
617 221-9220
web: www.sar.com

PROJECT

MAIN LIFT

PUMP STATION

TAUNTON, MA

TITLE

HVAC
BUILDING
SECTION

NO.	REVISIONS	DATE

DRAWN BY:	RLB
DESIGNED BY:	RHB
CHECKED BY:	RHB
ISSUE DATE:	03/31/22
BETA JOB NO.:	5530-000

SCALE

UNLESS OTHERWISE NOTED OR CHANGED BY REPRODUCTION

For Review Only

SHEET NO.

H-6

1/21/2022 10:14 AM W:\YEAR - 2017\17003.00 - TAUNTON MAIN LIFT PUMP STATION\HVAC DEPARTMENT\17003.00 HVAC PLAN.DWG

CUSTOM ENERGY RECOVERY UNIT SCHEDULE

ERV –

TAG NO.	LOCATION	SUPPLY AIR PERFORMANCE							RETURN/EXHAUST AIR PERFORMANCE						WINTER CONDITIONS DESIGN				GAS HEATER DATA					ELECTRICAL DATA					WEIGHT LBS	MANUFACTURER MODEL NUMBER	REMARKS
		SUPPLY IN CFM	OA IN CFM	ESP (IN WC)	TSP (IN WC)	FAN RPM	OPERATING POWER HP	MOTOR SIZE HP	EXH./RET. OUT CFM	E.S.P. IN (W.C.)	TOTAL SP IN (W.C.)	FAN RPM	OPERATING POWER HP	MOTOR SIZE HP	OUTDOOR		INDOOR		GAS	PRESS. WG.	MBH INPUT	MBH OUTPUT	LAT	MCA	MOCP	V	PHASE	HZ			
															DB °F	WB °F	DB °F	RH%													
ERV–1	ROOF	8,000	8,000	1.0	4.0	1750	–	10.0	8,250	0.8	3.0	1750	–	10	5.0	3.1	65	50	NAT	7"	350	275	–	–	–	480	3	60	6,540	HAAKON –	

ELECTRIC HEATER SCHEDULE

EUH

TAG NO.	CAPACITY	FAN DATA				MANUFACTURER MODEL NUMBER	REMARKS
	KW	CFM	V	PH	HZ		
EUH–1A, EUH–1B, EUH–1C, EUH–1D, EUH–1E & EUH–1E	5.0	700	480	3	60	QMARK QWD05034	SEE SPECIFICATIONS FOR ACCESSORIES

VRF HEAT PUMP (OUTDOOR UNIT) SCHEDULE

ACCU OUTDOOR UNIT									REMARKS
TAG	LOCATION	MFG'R. & MODEL NO.	HEAT MBH	COOL MBH	ELEC. V/PH/HZ	No. OF ELEC. FEEDERS	MCA	MOP	
ACCU–1	ROOF	YORK YVAHP060B21S	63.9	59.9	208/1/60	1	31	40	FURNISH WITH 18" HIGH STAND

DIFFUSER, REGISTER & GRILLE SCHEDULE

ID / CFM

TAG NO.	MODULE SIZE (IN)	NECK SIZE (IN)	SERVICE	MANUFACTURER MODEL NUMBER	REMARKS
SR–1	26x16	24x14	SUPPLY	TITUS 300FL	
SR–2	38x14	36x12	SUPPLY	TITUS 300FL	
SR–3	26x16	24x14	SUPPLY	TITUS 300FL	
ER–1	16x26	14x24	EXHAUST	TITUS 350FL	
ER–2	20x54	18x52	EXHAUST	TITUS 350FL	
ER–3	26x16	24x14	EXHAUST	TITUS 350FL	
ER–4	8x8	6x6	EXHAUST	TITUS 350FL	

VRF (INDOOR UNIT) SCHEDULE

HP FAN COIL UNIT										OUTDOOR UNIT	REMARKS
TAG	AREA SERVED	MFG'R. & MODEL NO.	TYPE UNIT	HEAT MBH	COOL MBH	CFM	ELEC. V/PH/HZ	MCA	MOP		
FCU–1	VFD AREA	YORK YICS030B21S	CEILING SUSPEND.	31.9	30.0	1,059	208/1/60	1.1	15	ACCU–1	UNIT TO BE MOUNTED 20" BELOW STRUCTURE
FCU–2	VFD AREA	YORK YICS030B21S	CEILING SUSPEND.	31.9	30.0	1,059	208/1/60	1.1	15	ACCU–1	UNIT TO BE MOUNTED 20" BELOW STRUCTURE

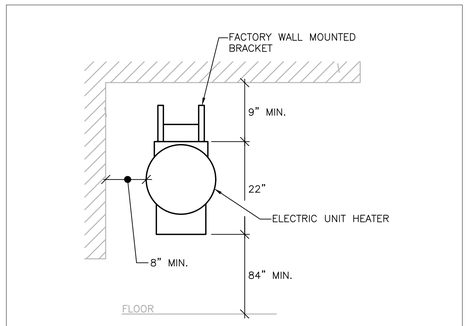

3 ELEC UNIT HEATER MOUNTING DETAIL
NO SCALE

DEHUMIDIFIER SCHEDULE

TAG NO.	LOCATION	EXTRACT PPD	ELECTRICAL DATA			MANUFACTURER MODEL NUMBER	WEIGHT LB	NOTES
			V	PH	HZ			
DH–1	BASEMENT LEVEL	56	120	1	60	EBAC IND. PRODUCTS MODEL CS60	63	PROVIDE WALL BRACKET AND COND. PUMP
DH–2	MEZZANINE LEVEL	56	120	1	60	EBAC IND. PRODUCTS MODEL CS60	63	PROVIDE WALL BRACKET AND COND. PUMP

MOUNT DEHUMIDIFIER ON WALL 18" A.F.F.

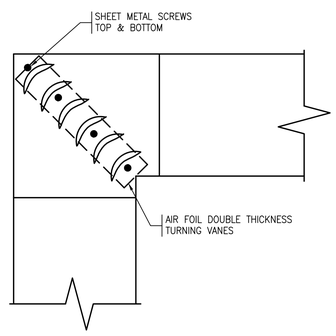

NOTE:
PROVIDE TURNING VANES IN ALL 90° DUCT ELBOWS HAVING A CENTERLINE RADIUS LESS THEN 1/2 TIMES THE DUCT WIDTH.

1 TYPICAL 90° DUCT ELBOW DETAIL
NO SCALE

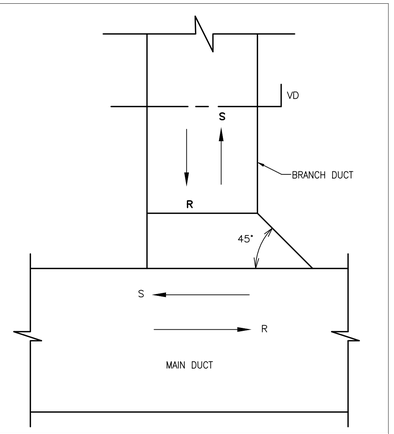

2 BRANCH DUCT CONNECTION DETAIL
NO SCALE

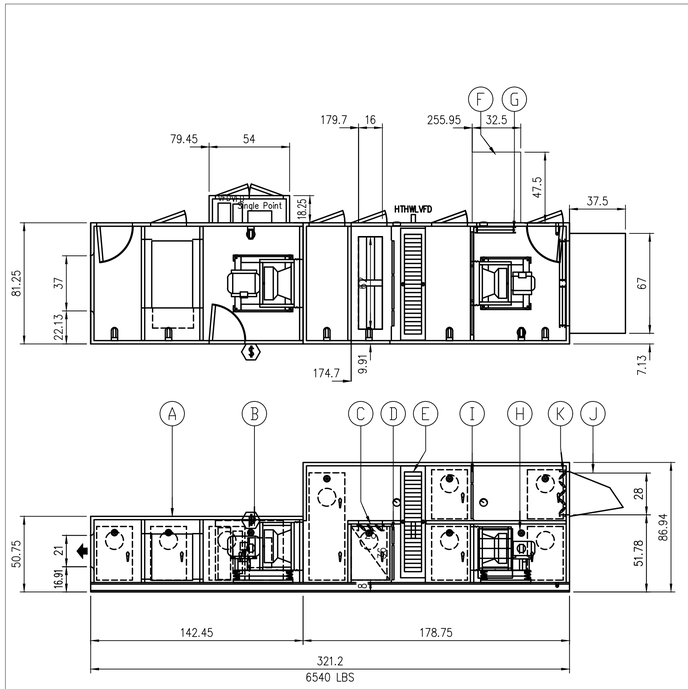

K OA DAMPER : OPPOSED BLADES
MAKE : T.A. Morrison 1000
SIZE : 57 X 29

UNIT MOUNTING
The unit is designed to be mounted on a roof mounted.

Note : Calculated unit weights are shipping weights and do not reflect operating conditions, items which are field installed or ship loose.

A GAS FIRED FURNACE, 10:1 TURNDOWN
MAKE : HEATCO
MODEL : HDA350XX44B08MB
FUEL PRESSURE : 0.500 psi
INPUT : 350 MBH OUTPUT : 280 MBH

B Service : SF
Fan: 22" EPQN SW, Arrangement–4
Class: 2 Max RPM: 2403
OP. PT1
A.F.(cfm): 8000
T.S.P.(in wc): 4
E.S.P.(in wc): 1
RPM: 1000
MOTOR : 20 HP, ODP Prem–Eff, 460/3/60
RPM : 1750 (GROUNDED SHAFT)
ISOLATORS : OS DEF : 2 in
FEG80 η_{pt}: 73% η_t/ η_{pt} : 92%

C RECIRC DAMPER : PARALLEL BLADES
MAKE : T.A. Morrison 1000
SIZE : 64 X 18

D RA FILTERS : LIFT–OUT UPSTREAM
VELOCITY : 536 FPM
TYPE : 2" (MERV 8) Farr 30/30
SIZES : 3 @ 24 X 12 2 @ 24 X 24

E HEAT WHEEL
TYPE: SG AMERICA HPC–1700T20
VOLTAGE : 460/3/60
VARIABLE SPEED
MOTOR : 0.5 HP

F EA HOOD

G EA DAMPER : PARALLEL BLADES
MAKE : T.A. Morrison 1000
SIZE : 25 X 35

H Service : EF
Fan: 20" EPQN SW, Arrangement–4
Class: 2 Max RPM: 2674
OP. PT1
A.F.(cfm): 8250
T.S.P.(in wc): 3
E.S.P.(in wc)0.8
RPM: 1666
MOTOR : 10 HP, ODP Prem–Eff, 460/3/60
RPM : 1750 (GROUNDED SHAFT)
ISOLATORS : OS DEF : 2 in
FEG75 η_{pt}: 70% η_t/ η_{pt} : 80%

I FILTERS : LIFT–OUT UPSTREAM
VELOCITY : 444 FPM
TYPE : 2" (MERV 8) Farr 30/30
SIZES : 3 @ 24 X 24 3 @ 24 X 12

J OA HOOD

4 ROOFTOP UNIT DETAIL
NO SCALE

PREPARED BY

BETA
www.BETA-Inc.com

REGISTERED PROFESSIONAL

COMMONWEALTH OF MASSACHUSETTS
ROSSDEAL CROWN
MECHANICAL
No. 43325
REGISTERED PROFESSIONAL ENGINEER

SUBCONSULTANT

SAR ENGINEERING, INC.

Mechanical/Electrical Engineers
150 Grossman Drive, Suite 309
Braintree, Massachusetts 02184
617 221-9220
web: www.sar.com

PROJECT

MAIN LIFT

PUMP STATION

TAUNTON, MA

TITLE

HVAC SCHEDULE, DETAILS & SECTION

NO.	REVISIONS	DATE

DRAWN BY:	RLB
DESIGNED BY:	RHB
CHECKED BY:	RHB
ISSUE DATE:	03/31/22
BETA JOB NO.:	5530-000

SCALE

UNLESS OTHERWISE NOTED OR CHANGED BY REPRODUCTION

For Review Only

SHEET NO. H-7

12/12/2022 10:14 AM W:\YEAR - 2017\17003.00 - TAUNTON MAIN LIFT PUMP STATION\HVAC DEPARTMENT\17003.00 HVAC PLAN.DWG

PLUMBING FIXTURE SCHEDULE

DESIGNATION	FIXTURE DESCRIPTION	CONNECTION SIZE				REMARKS
		CW	HW	S/W	V	
P-1	WATER CLOSET – WALL HUNG	1"	–	4"	2"	–
P-2	LAVATORY – WALL HUNG	1/2"	1/2"	2"	2"	–

NOTES:
1. ALL FINAL CONNECTIONS TO CASEWORK SINKS AND EQUIPMENT SHALL BE BY THE PLUMBING CONTRACTOR.
2. ALL EXPOSED VALVES, PIPING AND FITTINGS SHALL BE CHROME PLATED.
3. PLUMBING CONTRACTOR SHALL PROVIDE EACH CONNECTION TO EACH SINK OR PIECE OF EQUIPMENT ITS OWN INDIVIDUAL SHUTOFF VALVE.
4. MANUFACTURED CASEWORK CONTRACTOR SHALL PROVIDE ALL EQUIPMENT LISTED IN THE CASEWORK SCHEDULE INCLUDING TRIM, FAUCETS, BUBBLERS, SINK WASTES AND TAIL PIECES. PLUMBING CONTRACTOR SHALL PROVIDE FULL SIZE TRAP AND EXTENSION. PLUMBING CONTRACTOR SHALL ASSEMBLE AND INSTALL ALL PLUMBING RELATED ITEMS INCLUDING TRIM, FAUCETS, BUBBLERS, SINK WASTE, TAIL PIECES, TRAPS AND EXTENSIONS.

ELECTRIC WATER HEATER SCHEDULE

I.D.	MANUFACTURER	MODEL	GALS.	RECOVERY		KW	VOLTS	PHASE	HZ	REMARKS
				G.P.H.	△ TEMP.					
EWH-1	RHEEM	EGSP-10	10	12	100	3	480	1	–	–

SHOCK ABSORBER SCHEDULE

PDI RATING SYMBOL	A	B	C	D	E
PRECISION PLUMBING PRODUCTS OR EQUAL	SC-500	SC-750	SC-1000	SC-1250	SC-1500
WATTS REGULATOR COMPANY OR EQUAL	0750030	0750053	0750060	0750070	0750090
WADE OR EQUAL	5-P	10-P	20-P	50-P	75-P

* MANUFACTURERS NAMES AND MODEL NUMBERS ARE SHOWN ONLY TO REPRESENT TYPE, STYLE AND LEVEL OF QUALITY EXPECTED, SIMILAR EQUALS BY OTHER SPECIFIED MANUFACTURERS WILL BE ACCEPTABLE.

DRAIN SCHEDULE*

SYMBOL	TYPE	MANUFACTURER	MODEL	OUTLET	STRAINER	REMARKS
A	FD	J.R. SMITH	2005-A-P	CAULK	NICK-BRZ	FINISHED AREAS
B	FD	J.R. SMITH	2130-U-PB-P	CAULK	CAST IRON	DUCTILE IRON GRATE – MECH RMS

* ALL FLOOR DRAINS SHALL BE PROVIDED WITH AUTOMATIC TRAP PRIMERS. REFER TO DETAIL FOR PIPING ARRANGEMENT.

PLUMBING NOTES

1. THE WORK COVERED CONSISTS OF FURNISHING ALL LABOR AND MATERIALS NECESSARY TO INSTALL, COMPLETE AND READY FOR CONTINUOUS OPERATION, THE PLUMBING SYSTEMS, APPARATUS AND EQUIPMENT FOR THIS PROJECT.
2. ALL EQUIPMENT AND MATERIALS FURNISHED UNDER THE PLUMBING SUB-CONTRACT, LABOR AND TESTING PERFORMED HEREIN SHALL BE IN COMPLETE ACCORDANCE WITH THE STATE BUILDING CODE, LOCAL FUEL GAS AND PLUMBING CODES, ALL LOCAL CODES AND REGULATIONS, NATIONAL FIRE PROTECTION ASSOCIATION, INSURANCE REGULATIONS AND REQUIREMENTS GOVERNING SUCH WORK.
3. ANY AND ALL PERMITS REQUIRED FOR INSTALLATION OF ANY MATERIAL SHALL BE OBTAINED AS PART OF THE WORK OF THE SPECIFICATION INCLUDING ALL FEES OR EXPENSES INCURRED.
4. ALL PRODUCTS USED AS PART OF THE POTABLE WATER SYSTEM WHERE THE INTENDED PURPOSE IS TO DELIVER OR CONVEY POTABLE WATER FOR HUMAN CONSUMPTION SHALL BE LEAD FREE AND CONFORM TO THE LATEST "LEAD FREE" LAW.
5. WHERE WATER PIPING IS SHOWN DROPPING INTO PLUMBING CHASES WITH SIZES NOTED, THAT SIZE SHALL BE CARRIED FULL LENGTH THROUGH THE CHASE. REFER TO PLUMBING FIXTURE SCHEDULE ON THIS DRAWING FOR INDIVIDUAL FIXTURE CONNECTION SIZES.
6. UNLESS OTHERWISE NOTED, ALL HORIZONTAL DRAINAGE PIPING WHICH IS 3" OR LESS IN DIAMETER SHALL PITCH OF NOT LESS THAN 1/4" PER FOOT AND ALL HORIZONTAL DRAINAGE PIPING WHICH IS 4" OR LARGER IN DIAMETER SHALL PITCH OF NOT LESS THAN 1/8" PER FOOT.
7. PROVIDE ALL FLOOR CLEANOUTS WITH HUB AND SPIGOT; LEAD AND OAKUM JOINTS FROM CLEANOUT TO AND INCLUDING CONNECTION TO SANITARY DRAIN.
8. REFER TO ARCHITECTURAL PLANS FOR EXACT LOCATION AND HEIGHT OF ALL PLUMBING FIXTURES.
9. MISCELLANEOUS DISCREPANCIES OR OMISSIONS WHICH MIGHT APPEAR ON THE PLANS OR SPECIFICATIONS WILL NOT RELIEVE THE PLUMBING SUB-CONTRACTOR OF CODE COMPLIANCE.
10. ALL FLOOR DRAINS SHALL BE PROVIDED WITH A TRAP PRIMER CONNECTION. CONTRACTOR SHALL PROVIDE ALL ASSOCIATED EQUIPMENT NECESSARY TO PROVIDE A COMPLETE SYSTEM INCLUDING AN ELECTRONICALLY OPERATED PRIMING MANIFOLD AND ALL ASSOCIATED PIPING REQUIRED.
11. PROVIDE CLEANOUTS AT ALL CHANGE OF DIRECTIONS FOR SANITARY/WASTE PIPING.
12. PROVIDE WALL CLEANOUTS WITH ACCESS PANELS AT ALL SANITARY/WASTE PIPING WITHIN PIPE CHASES OR WALLS.
13. HANDICAPPED ACCESSIBLE FIXTURES SHALL BE IN ACCORDANCE WITH THE AMERICANS WITH DISABILITIES ACT ACCESSIBILITY GUIDELINES FOR BUILDINGS AND FACILITIES AND THE RULES AND REGULATIONS OF THE MASSACHUSETTS ARCHITECTURAL ACCESS BOARD. WHERE THE TWO STANDARDS DIFFER, THE MORE STRINGENT SHALL APPLY.
14. ALL BURIED DOMESTIC WATER PIPING, NON-POTABLE WATER PIPING, TEMPERED WATER PIPING OR AIR PIPING SHALL BE SOFT ROLLED "K" COPPER COIL AND BE PROTECTED WITH A HIGH DENSITY RUBBER INSULATION. FITTINGS SHALL NOT BE PERMITTED IN OR UNDER SLAB. PROVIDE SLAB PENETRATIONS WITH SLEEVE AND FIRE STOPPING.

PLUMBING LEGEND

SYMBOL	ABBREVIATION	DESCRIPTION
		BELOW FLOOR PIPING (INDICATED AS DOUBLE LINEWORK)
	CW	COLD WATER
	HW	HOT WATER
NPCW	NPCW	NON-POTABLE COLD WATER
	S or W	SOIL OR WASTE
	V	VENT
G	G	NATURAL GAS
	CONT	CONTINUATION
	UP	PIPE RISE OR UP
	DN	PIPE DROP OR DOWN
	TEE	PIPE TEE
	SOV	SHUT-OFF VALVE
	PRV	PRESSURE REDUCING VALVE
	VIV	VALVE IN VERTICAL
	CV	CHECK VALVE
	W & T	WASTE & TRAP
	CO	CLEANOUT PLUG
	FCO	FLUSH FLOOR CLEANOUT
		ARROW INDICATES DIRECTION OF FLOW
.01		ARROW INDICATES DIRECTION OF SLOPE
		UNION
	WTS	WATERTIGHT SLEEVE
	HB	HOSE BIBB
	WH	WALL HYDRANT
	FD "A"	FLOOR DRAIN & TYPE
	RPZ	REDUCED PRESSURE ZONE ASSEMBLY
WM	WM	WATER METER
	T	THERMOMETER
	PG	PRESSURE GAUGE WITH PETCOCK
	T&P	TEMPERATURE AND PRESSURE RELIEF VALVE
	SA	SHOCK ABSORBER
		VACUUM RELIEF VALVE
	POC	POINT OF CONNECTION
	WH-1	WATER HEATER & NUMBER
	SS	SOIL STACK
	VS	VENT STACK
	VTR	VENT THRU ROOF
	INV	INVERT
	TYP	TYPICAL
	NTS	NOT TO SCALE
	AFF	ABOVE FINISHED FLOOR
	LPC	LIMIT OF PLUMBING CONTRACT
	S=.01	SLOPE = 1/8" PER FOOT
	S=.02	SLOPE = 1/4" PER FOOT
	F.F.E.	FINISHED FLOOR ELEVATION
	PD	PUMPED DISCHARGE
	ETP	ELECTRONIC TRAP PRIMER

PREPARED BY

BETA
www.BETA-Inc.com

REGISTERED PROFESSIONAL

JAMES A. LUCIE PLUMBING No. 33900 MASSACHUSETTS

SUBCONSULTANT

SAR ENGINEERING, INC.

Mechanical/Electrical Engineers
150 Grossman Drive, Suite 309
Braintree, Massachusetts 02184
617 221-9220
web: www.sar.com

PROJECT

MAIN LIFT

PUMP STATION

TAUNTON, MA

TITLE

PLUMBING LEGEND, NOTES & SCHEDULE

NO.	REVISIONS	DATE

DRAWN BY: GPC
DESIGNED BY: GPC
CHECKED BY: JAL
ISSUE DATE: 03/31/22
BETA JOB NO.: 5530-000

SCALE

UNLESS OTHERWISE NOTED OR CHANGED BY REPRODUCTION

SHEET NO. P-1

1/19/2022 1:36 PM W:\YEAR - 2017\17003.00 - TAUNTON MAIN LIFT PUMP STATION\P.LUMBING DEPARTMENT\17003-PLUMBING.DWG

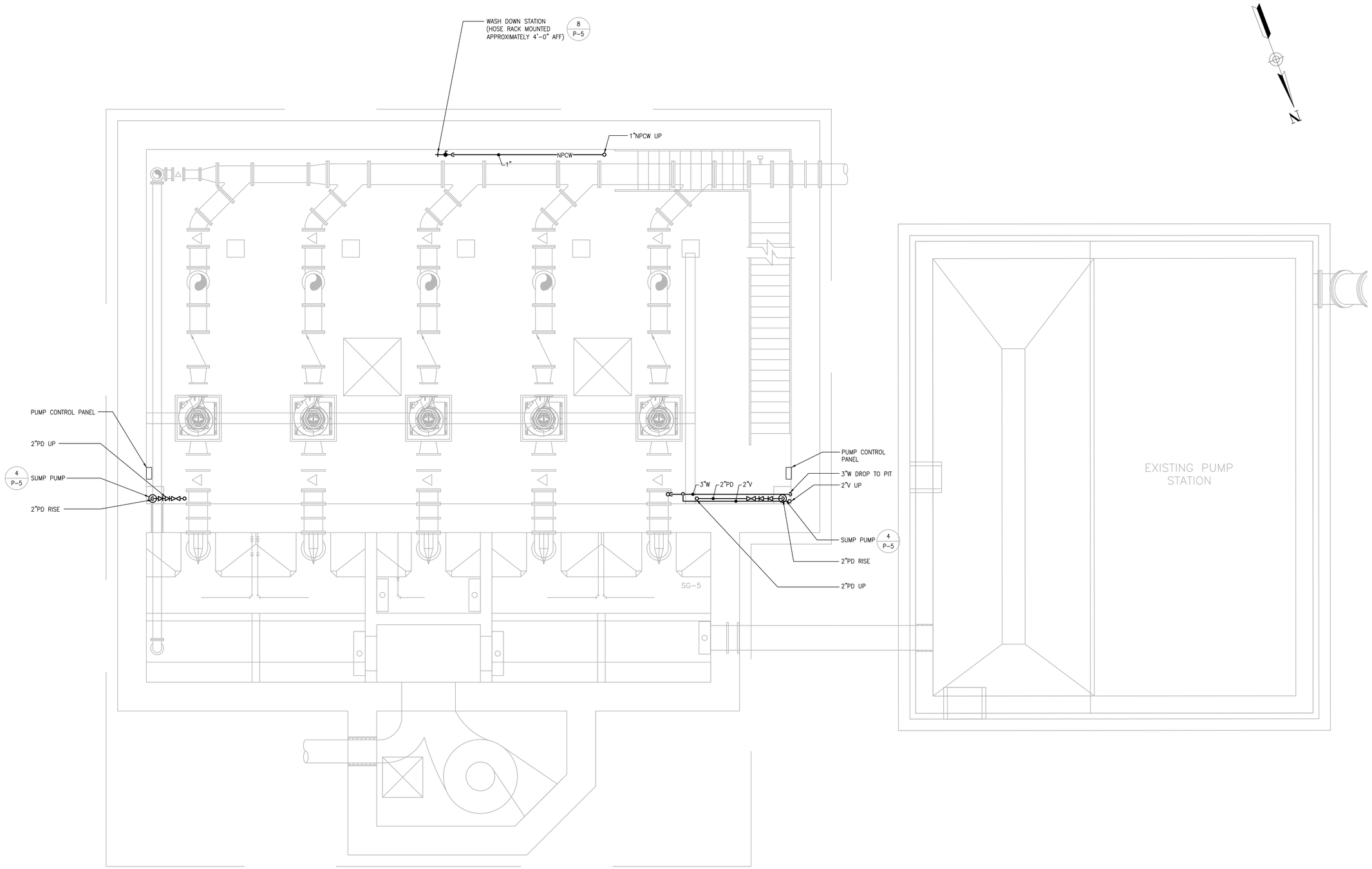

PLUMBING BASEMENT LEVEL PLAN

SCALE: 1/4 " = 1'

PREPARED BY

BETA
www.BETA-Inc.com

REGISTERED PROFESSIONAL

COMMONWEALTH OF MASSACHUSETTS
JAMES A. LUCIE
PLUMBING
No. 39205
REGISTERED PROFESSIONAL ENGINEER

SUBCONSULTANT

SAR ENGINEERING, INC.

Mechanical/Electrical Engineers
150 Grossman Drive, Suite 309
Braintree, Massachusetts 02184
617 221-9220
web: www.sar.com

PROJECT

MAIN LIFT

PUMP STATION

TAUNTON, MA

TITLE

PLUMBING
##################

NO.	REVISIONS	DATE

DRAWN BY:	GPC
DESIGNED BY:	GPC
CHECKED BY:	JAL
ISSUE DATE:	03/31/22
BETA JOB NO.:	5530-000

SCALE

UNLESS OTHERWISE NOTED OR CHANGED BY REPRODUCTION

SHEET NO.

P-2

1/19/2022 1:36 PM W:\YEAR - 2017\17003.00 - TAUNTON MAIN LIFT PUMP STATION\PLUMBING DEPARTMENT\17003-PLUMBING.DWG

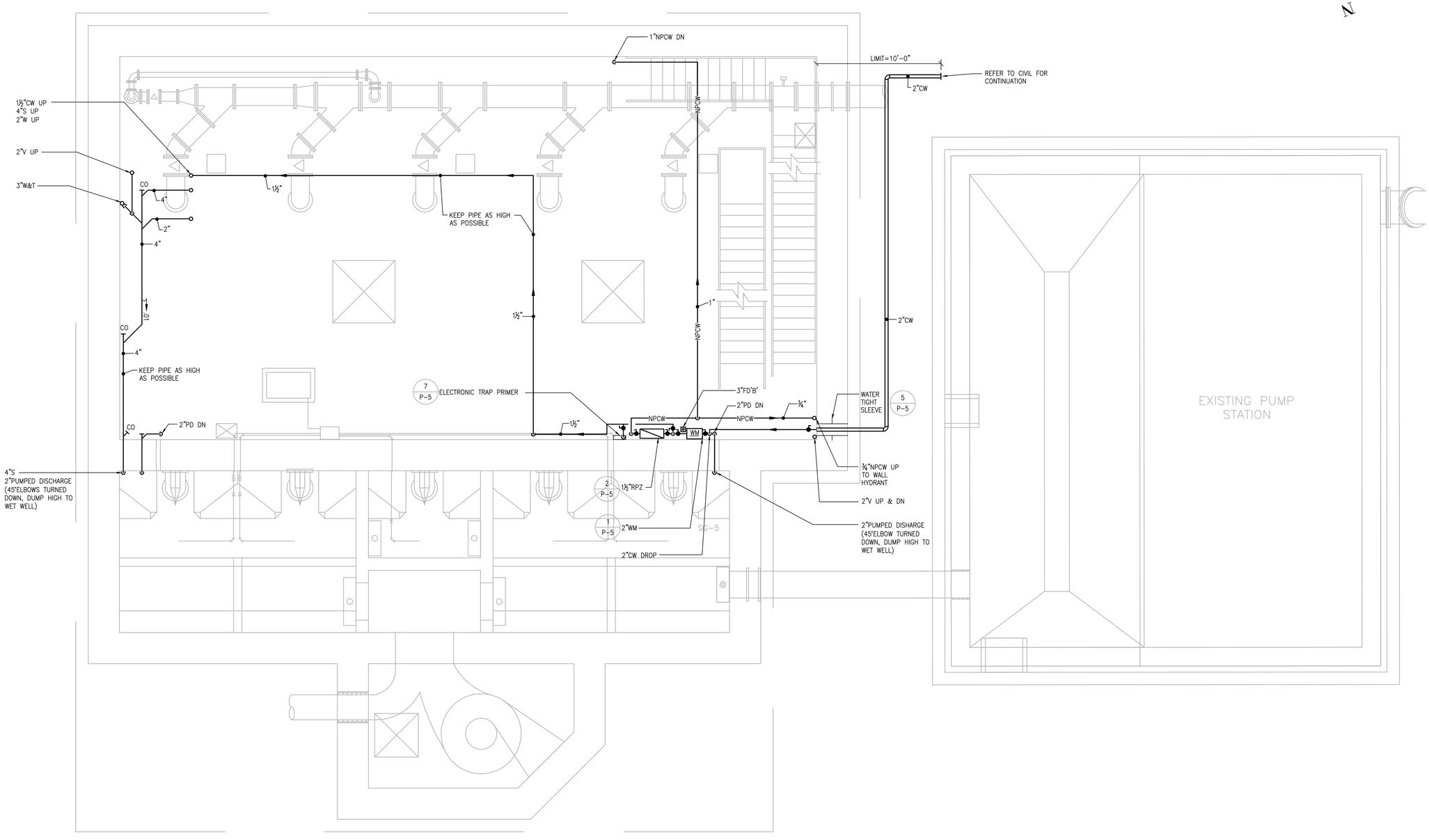

PLUMBING MEZZANINE LEVEL PLAN

SCALE: 1/4 " = 1'

PREPARED BY

BETA
www.BETA-Inc.com

REGISTERED PROFESSIONAL

JAMES A. LUCIE PLUMBING No. 33200 COMMONWEALTH OF MASSACHUSETTS

SUBCONSULTANT

SAR ENGINEERING, INC.

Mechanical/Electrical Engineers
150 Grossman Drive, Suite 309
Braintree, Massachusetts 02184
617 221-9220
web: www.sar.com

PROJECT

MAIN LIFT

PUMP STATION

TAUNTON, MA

TITLE

PLUMBING
##########

NO.	REVISIONS	DATE

DRAWN BY:	RLB
DESIGNED BY:	RLB
CHECKED BY:	JAL
ISSUE DATE:	03/31/22
BETA JOB NO.:	5530-000

SCALE

UNLESS OTHERWISE NOTED OR CHANGED BY REPRODUCTION

SHEET NO. P-3

1/19/2022 1:36 PM W:\YEAR - 2017\17003.00 - TAUNTON MAIN LIFT PUMP STATION\PLUMBING DEPARTMENT\17003-PLUMBING.DWG

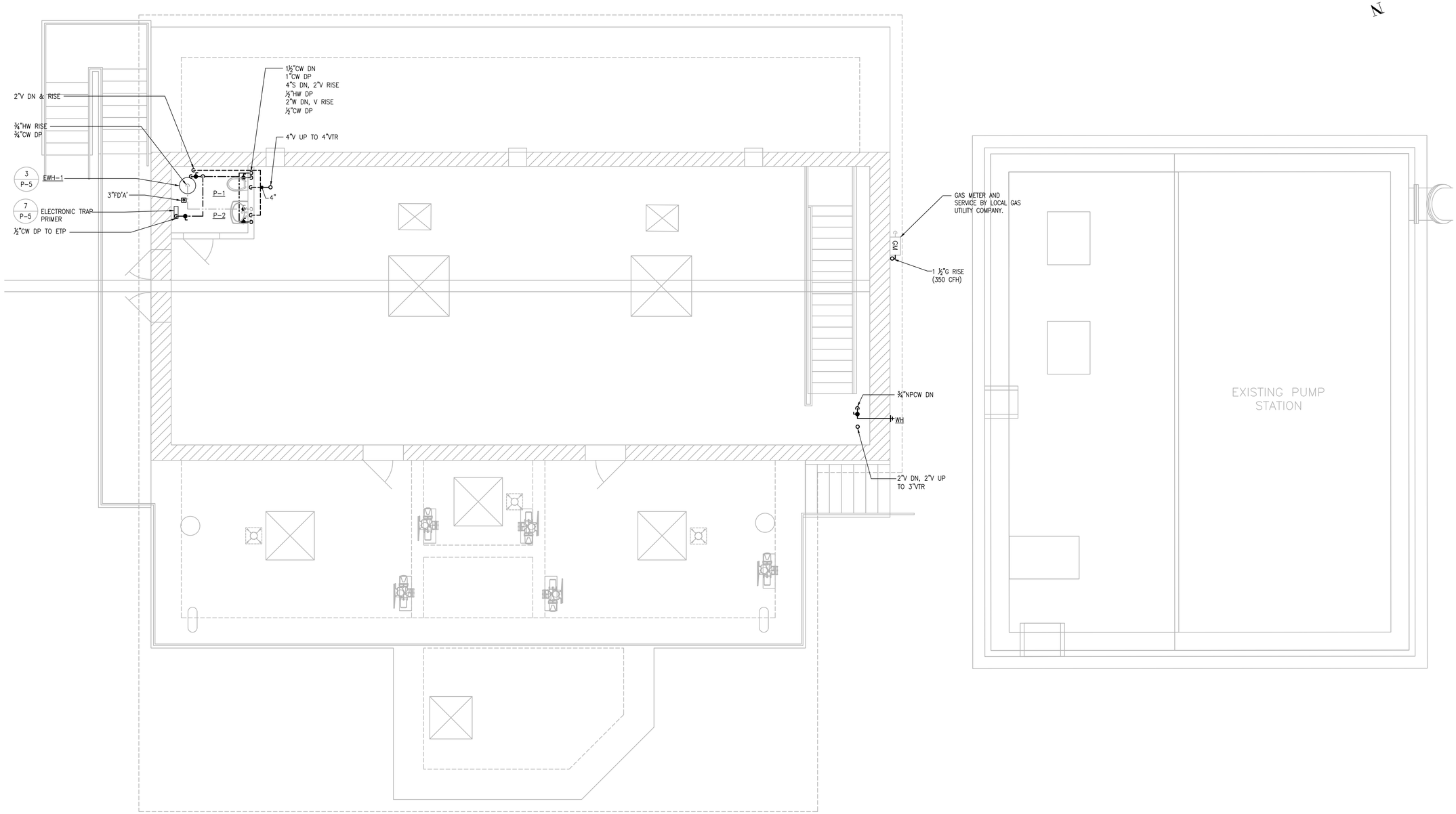

PLUMBING GROUND LEVEL PLAN

SCALE: 1/4 " = 1'

PREPARED BY

BETA
www.BETA-Inc.com

REGISTERED PROFESSIONAL

JAMES A. LUCIE PLUMBING No. 33205 COMMONWEALTH OF MASSACHUSETTS

SUBCONSULTANT

SAR ENGINEERING, INC.

Mechanical/Electrical Engineers
150 Grossman Drive, Suite 309
Braintree, Massachusetts 02184
617 221-9220
web: www.sar.com

PROJECT

MAIN LIFT

PUMP STATION

TAUNTON, MA

TITLE

PLUMBING
##################

NO.	REVISIONS	DATE

DRAWN BY:	RLB
DESIGNED BY:	RLB
CHECKED BY:	JAL
ISSUE DATE:	03/31/22
BETA JOB NO.:	5530-000

SCALE

UNLESS OTHERWISE NOTED OR CHANGED BY REPRODUCTION

SHEET NO.

P-4

1/19/2022 1:36 PM W:\YEAR - 2017\17003.00 - TAUNTON MAIN LIFT PUMP STATION\PLUMBING DEPARTMENT\17003-PLUMBING.DWG

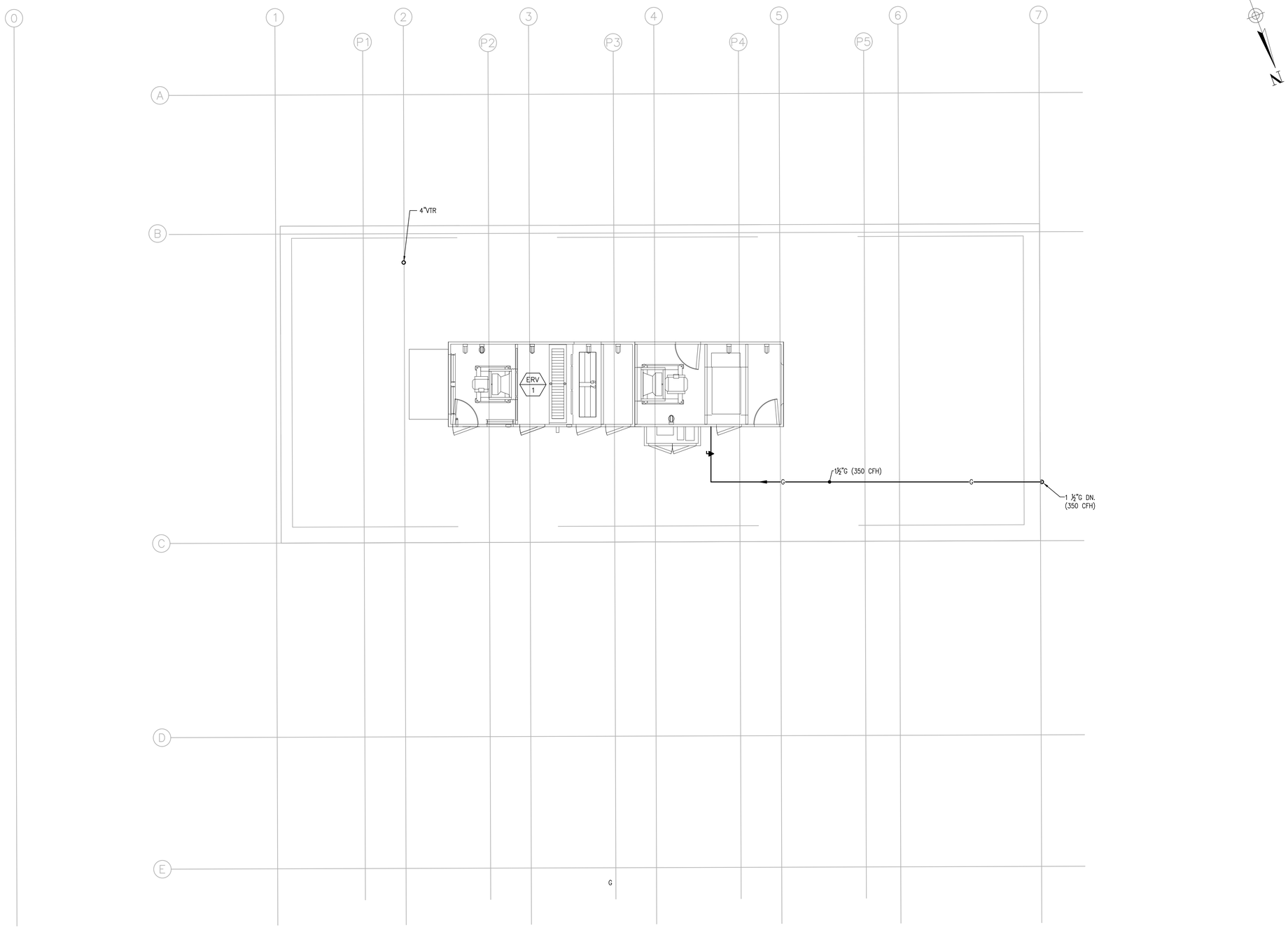

PLUMBING ROOF PLAN

SCALE: 1/4 " = 1'

PREPARED BY

BETA
www.BETA-Inc.com

REGISTERED PROFESSIONAL

JAMES A. LUCIE
PLUMBING
No. 35205
REGISTERED
COMMONWEALTH OF MASSACHUSETTS
PROFESSIONAL ENGINEER

SUBCONSULTANT

SAR ENGINEERING, INC.

Mechanical/Electrical Engineers
150 Grossman Drive, Suite 309
Braintree, Massachusetts 02184
617 221-9220
web: www.sar.com

PROJECT

MAIN LIFT

PUMP STATION

TAUNTON, MA

TITLE

PLUMBING
ROOF PLAN

NO.	REVISIONS	DATE

DRAWN BY:	RLB
DESIGNED BY:	RLB
CHECKED BY:	JAL
ISSUE DATE:	03/31/22
BETA JOB NO.:	5530-000

SCALE

UNLESS OTHERWISE NOTED OR CHANGED BY REPRODUCTION

SHEET NO.

P-5

1/19/2022 1:36 PM W:\YEAR - 2017\17003.00 - TAUNTON MAIN LIFT PUMP STATION\PLUMBING DEPARTMENT\17003-PLUMBING.DWG

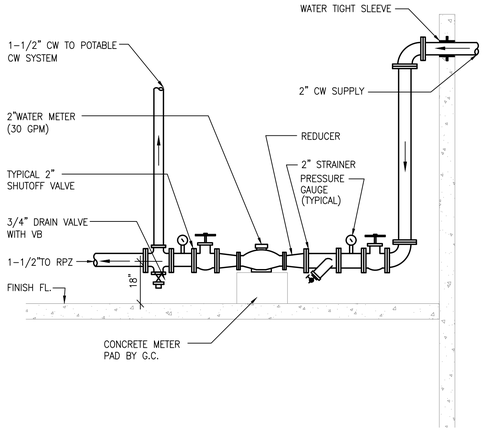

1 DOMESTIC WATER METER DETAIL NTS

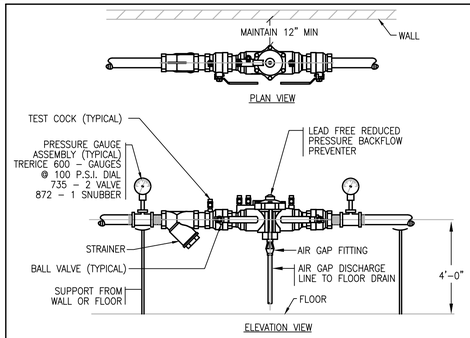

NOTES:
1. REDUCED PRESSURE BACKFLOW PREVENTER SHALL BE APPROVED BY THE DEPARTMENT OF ENVIRONMENTAL PROTECTION AGENCY.
2. BACKFLOW PREVENTER SHALL BE IN COMPLETE ACCORDANCE WITH AUTHORITIES HAVING JURISDICTION. THE PLUMBING CONTRACTOR SHALL SUBMIT PLANS AND DEVICE INFORMATION FOR APPROVAL PRIOR TO INSTALLATION.
3. FURNISH TO OWNER ONE TEST KIT AND SPARE PARTS KIT FOR EACH DEVICE.
4. THIS CONTRACTOR SHALL ACT AS THE OWNERS AGENT IN SEEKING APPROVAL FROM ALL LOCAL AND STATE AUTHORITIES. THIS CONTRACTOR SHALL SUBMIT ALL PLANS, SPECS. AND APPLICATIONS REQUIRED FOR APPROVAL AND PAY ALL FEES.
5. SEE FLOOR PLANS FOR SIZES.
6. MAINTAIN 1'-0" CLEARANCE FROM WALL.

2 REDUCED PRESSURE BACKFLOW DETAIL NTS

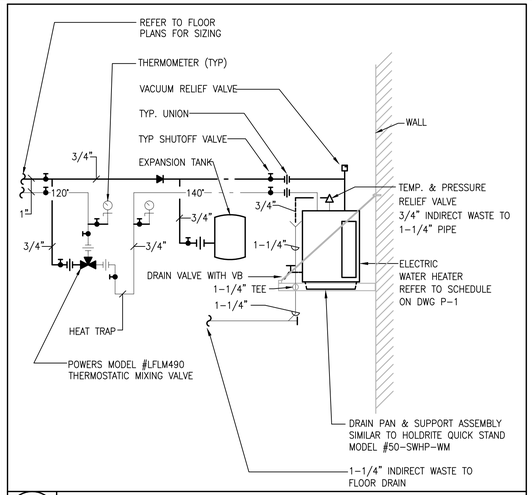

3 WALL HUNG ELECTRIC WATER HEATER DETAIL NTS

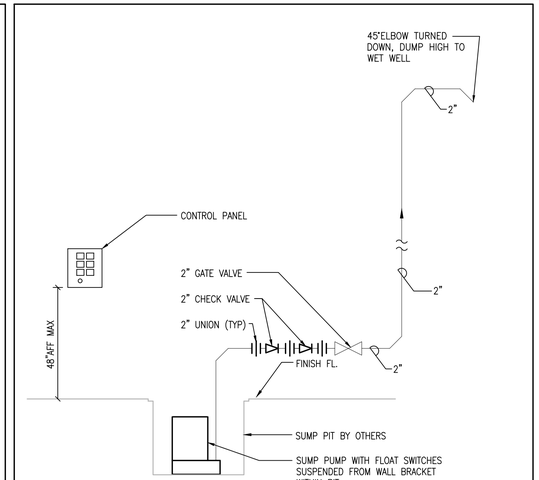

4 SUMP PUMP DETAIL NTS

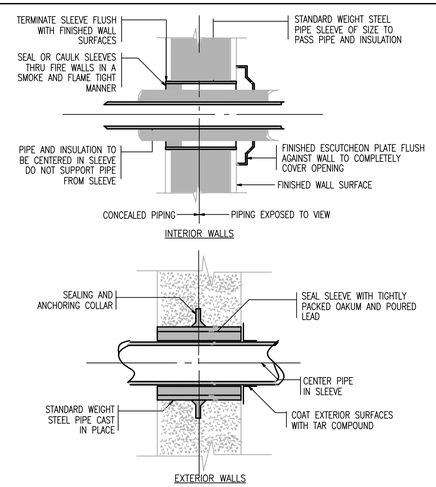

5 PIPING SLEEVE DETAIL NTS

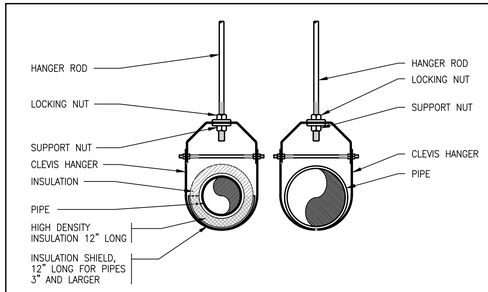

HANGER ROD SCHEDULE	
PIPE SIZE	ROD SIZE
UP TO 2"	3/8" DIA.
2 1/2" THRU 3"	1/2" DIA.
4" AND 5"	5/8"
6" THRU 8"	3/4"
12"	7/8"

HANGER ROD SPACING	
PIPE SIZE	MAX. ALLOWABLE SPACING
1"	7'
1 1/4"	8'
1 1/2"	9'
2"	10'
2 1/2"	11'
3" THRU 8"	12'
10" & 12"	15"

INSULATED AND NON INSULATED PLUMBING SYSTEMS

6 CLEVIS PIPE HANGER DETAIL NTS

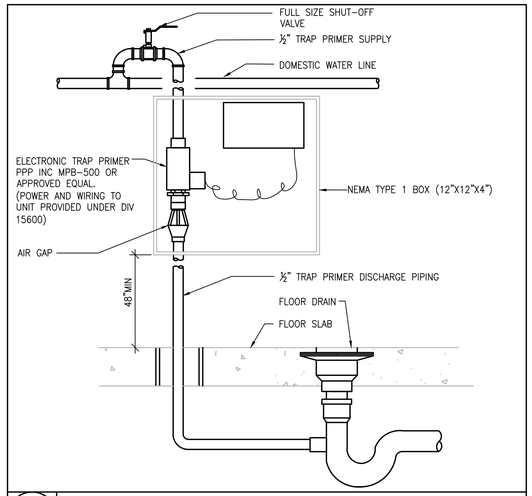

7 TRAP PRIMER DETAIL NTS

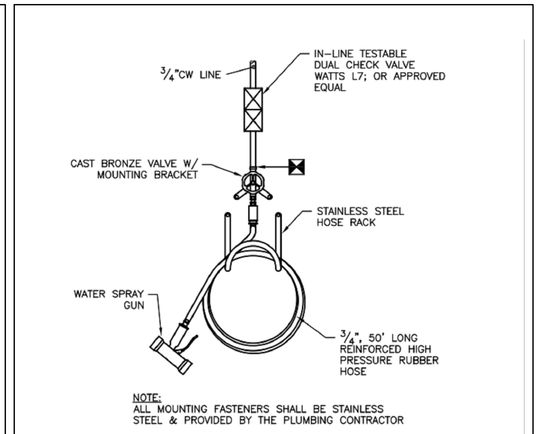

NOTE:
ALL MOUNTING FASTENERS SHALL BE STAINLESS STEEL & PROVIDED BY THE PLUMBING CONTRACTOR

8 WASH DOWN STATION DETAIL NTS

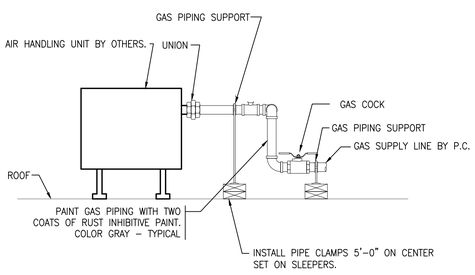

9 ROOFTOP UNIT GAS PIPING DETAIL NTS

PREPARED BY

BETA
www.BETA-Inc.com

REGISTERED PROFESSIONAL

JAMES A. LUCIE PLUMBING No. 33906 REGISTERED PROFESSIONAL ENGINEER COMMONWEALTH OF MASSACHUSETTS

SUBCONSULTANT

SAR ENGINEERING, INC.

Mechanical/Electrical Engineers
150 Grossman Drive, Suite 309
Braintree, Massachusetts 02184
617 221-9220
web: www.sar.com

PROJECT

MAIN LIFT PUMP STATION

TAUNTON, MA

TITLE

PLUMBING DETAILS

NO.	REVISIONS	DATE

DRAWN BY:	RLB
DESIGNED BY:	RLB
CHECKED BY:	JAL
ISSUE DATE:	03/31/22
BETA JOB NO.:	5530-000

SCALE

UNLESS OTHERWISE NOTED OR CHANGED BY REPRODUCTION

SHEET NO. P-6

1/19/2022 1:36 PM W:\YEAR - 2017\17003.00 - TAUNTON MAIN LIFT PUMP STATION\PLUMBING DEPARTMENT\17003-PLUMBING.DWG

ABBREVIATIONS

AM	AUTO–MANUAL
CP	CONTROL PANEL
DO	DISSOLVED OXYGEN
ES	EMERGENCY STOP
ETH	ETHERNET
FR	FOWARD–REVERSE
HI	HIGH
HOA	HAND–OFF–AUTO
JB	JUNCTION BOX
LR	LOCAL–REMOTE
MC	MOTOR CONTROLLER (STARTER)
OAC	OPEN–AUTO–CLOSE
OIT	OPERATOR INTERFACE TERMINAL
ORP	OXYGEN REDUCTION POTENTIAL
OS	OPERATOR STATION
PH	HYDROGEN ION CONCENTRATION
PRESS	PRESSURE
SS	START–STOP
TEMP	TEMPERATURE
TURB	TURBIDITY
VFD	VARIABLE FREQUENCY DRIVE
BTE CEN	BIOLOGICAL TREATED EFFLUENT CENTRATE
FA	FOUL AIR
LS	LIME SLURRY
PM	POLYMER
PI	PRIMARY INFLUENT
PS	PRIMARY SLUDGE
PTE	PRIMARY TANK EFFLUENT
RAS	RETURN ACTIVATED SLUDGE
RSW	RAW SEWAGE WATER
SAN	SANITRAY WASTE
SC	SCUM
SBS	SODIUM BISULFITE
SHC	SODIUM HYPOCHLORITE
SSE	SECONDARY SETTLED EFLUENT
STO	SLUDGE THICKENER OVERFLOW
TEF	TREATED EFFLUENT WATER
TS	THICKENED SLUDGE
WAS	WASTE ACTIVATED SLUDGE

INSTRUMENT IDENTIFICATION LETTERS

	FIRST LETTER		SUCCECEEDING LETTER(S)		
	PROCESS OR INIATING VAIRABLE	MODIFIER	READOUT OR PASSIVE FUNCTION	OUTPUT FUNCTION	MODIFIER
A	ANALYSIS		ALARM		
B	BURNER, COMBUST.		USER'S CHOICE	USER'S CHOICE	USER'S CHOICE
C	USER'S CHOICE		USER'S CHOICE	CLOSE	USER'S CHOICE
D	USER'S CHOICE	DIFFERENCE	USER'S CHOICE	USER'S CHOICE	USER'S CHOICE
E	VOLTAGE		PRIMARY ELEMENT		
F	FLOW	FRACTION			
G	USER'S CHOICE		GLASS		
H	HAND, MANUAL		HORN		HIGH
I	CURRENT		INDICATE		
J	POWER	SCAN			
K	TIME, SCHEDULE			CONTROL STATION	
L	LEVEL		LIGHT		LOW
M	MOISTURE, HUMIDITY				MIDDLE
N	USER'S CHOICE		USER'S CHOICE	USER'S CHOICE	USER'S CHOICE
O	USER'S CHOICE		USER'S CHOICE	OPEN	USER'S CHOICE
P	PRESSURE, VACUUM		POINT, TEST		
Q	QUANTITY, EVENT	TOTALIZE			
R	RADIATION		RECORD, PRINT		
S	SPEED, FREQUENCY	SAFETY		SWITCH	
T	TEMP.			TRANSMIT	
U	MULTI–VARIABLE		MULTI–FUNCTION	MULTI–FUNCTION	MULTI–FUNCTION
V	VIBRATION			VALVE, DAMPER	
W	WEIGHT, FORCE		WELL		
X	UN–CLASSIFIED		UN–CLASSIFIED	UN–CLASSIFIED	UN–CLASSIFIED
Y	EVENT, STATE			RELAY, COMPUTE	
Z	POSITION			DRIVE, ACTUATOR	

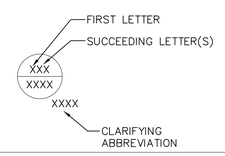

LINE LEGEND

- NEW PROCESS PIPING
- EXISTING PROCESS PIPING
- PNEUMATIC AIR PIPING
- DIGITAL SIGNAL
- ANALOG SIGNAL
- ELECTRICAL POWER OR CONTROL
- FIELD INSTRUMENTATION (XXX / XXXX)
- PLC INTERFACE (XXX / XXXX)
- PANEL/OIT/SCADA DISPLAY AND OR CONTROL (XXX / XXXX)
- INDEPENDENT CONTROIL CIRCUIT (XXX / XXXX)
- DRAWING AND OR PROCESS REFERENCE

SYMBOL LEGEND

- ACTUATOR – MOTORIZED
- ACTUATOR – SOLENOID
- AIR REGULATOR/SEPERATOR
- ANALYZER
- BLOWER/FAN
- CALIBRATION COLUMN
- COMPRESSOR – ROTARY TYPE
- DRAIN
- EDUCATOR
- ELECTRIC MOTOR
- EMERGENCY EYEWASH/SHOWER
- FLEX CONNECTION
- FLOW METER – MAGNETIC
- FLOW METER – ULTRASONIC STRAP ON
- FLOW METER – ROTAMETER
- FLOW METER – THERMAL MASS
- FLOW SWITCH
- GRINDER
- HOSE
- LEVEL SWITCH – FLOAT SWITCH
- LEVEL SWITCH – PADDLE WHEEL
- LEVEL TRANSMITTER – SUBMERSIBLE PRESSURE
- LEVEL TRANSMITTER – ULTRANSONIC
- LEVEL TRANSMITTER – RADAR
- MACERATOR
- MIXER
- MIXER – SUBMERSIBLE
- MOTOR
- POSITION SWITCH
- PULSATION DAMPENER
- PUMP – CENTRIFUGAL
- PUMP – PERISTALTIC
- PUMP – PROGRESSING/CAVITY
- PUMP – RECIPROCATING/METERING
- PUMP – ROTARY LUBE
- PUMP – SUBMERSIBLE
- SLIDE OR SLUICE GATE
- STATIC MIXER
- VALVE – BALL
- VALVE – BUTTERFLY
- VALVE – CHECK
- VALVE – GATE
- VALVE – GLOBE
- VALVE – PINCH
- VALVE – PLUG
- VALVE – PRESSURE REGULATING
- VALVE – PRESSURE REGULATING
- VIBRATOR

PREPARED BY

BETA
www.BETA-Inc.com

REGISTERED PROFESSIONAL

COMMONWEALTH OF MASSACHUSETTS
MICHAEL J. COTTER
ELECTRICAL
No. 40999
REGISTERED PROFESSIONAL ENGINEER

SUBCONSULTANT

S&R ENGINEERING, INC.

Mechanical/Electrical Engineers
150 Grossman Drive, Suite 309
Braintree, Massachusetts 02184
617 221-9220
web: www.sar.com

PROJECT

MAIN LIFT PUMP STATION

TAUNTON, MA

TITLE

INSTRUMENTATION & CONTROLS LEGEND AND NOTES

NO.	REVISIONS	DATE

DRAWN BY:	RB
DESIGNED BY:	MC
CHECKED BY:	MC
ISSUE DATE:	03/31/22
BETA JOB NO.:	5530-000

SCALE

AS SHOWN

UNLESS OTHERWISE NOTED OR CHANGED BY REPRODUCTION

For Review Only

SHEET NO. I-1

6/6/2021 6:40 PM W:\YEAR - 2017\17003.00 - TAUNTON MAIN LIFT PUMP STATION\ELECTRICAL DEPARTMENT\17003.00 I&C.DWG

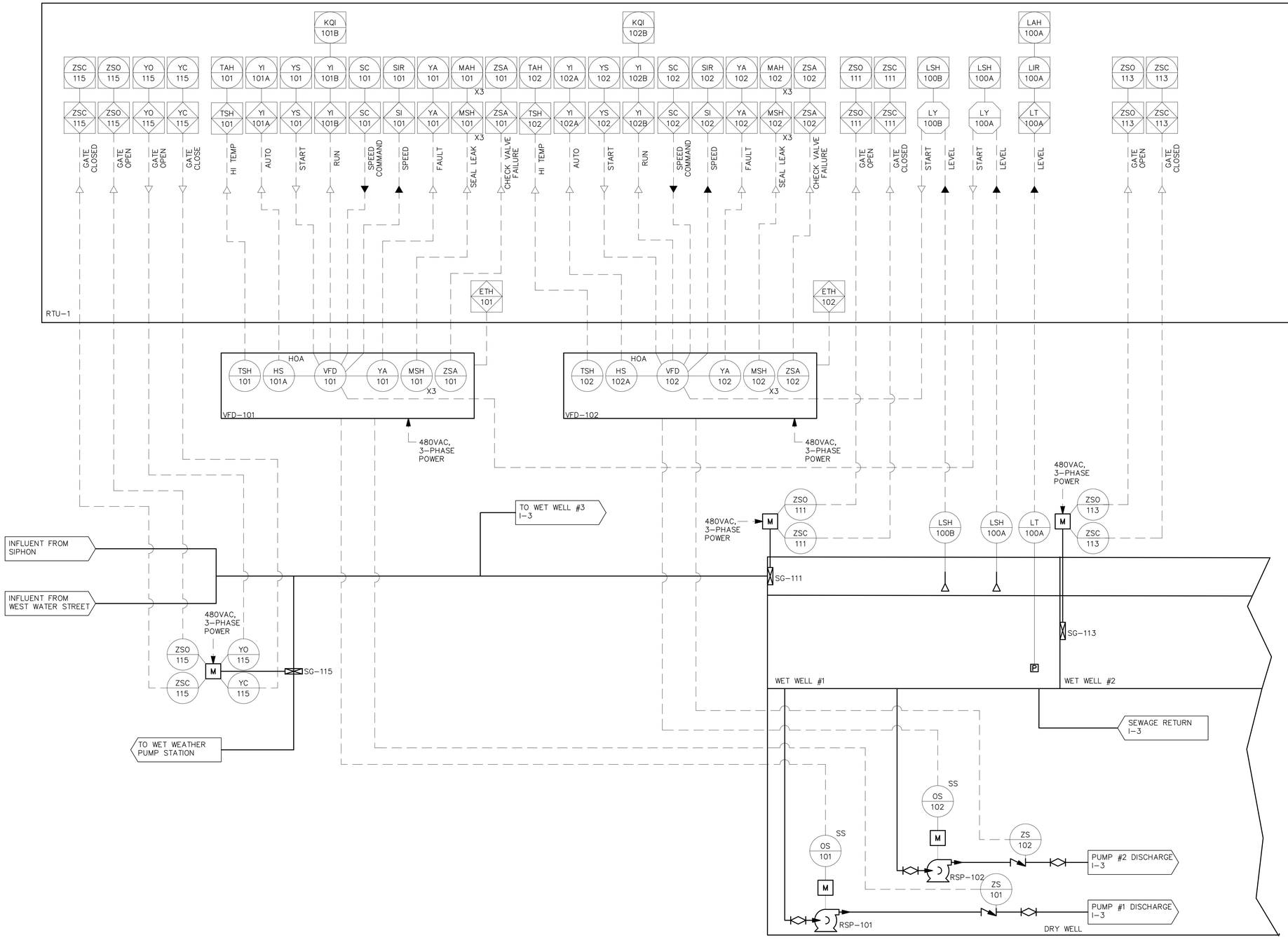

PREPARED BY

BETA
www.BETA-Inc.com

REGISTERED PROFESSIONAL

COMMONWEALTH OF MASSACHUSETTS
MICHAEL J. COTTER
ELECTRICAL
No. 40999
REGISTERED PROFESSIONAL ENGINEER

SUBCONSULTANT

S-A-R ENGINEERING, INC.

Mechanical/Electrical Engineers
150 Grossman Drive, Suite 309
Braintree, Massachusetts 02184
617 221-9220
web: www.sar.com

PROJECT

MAIN LIFT

PUMP STATION

TAUNTON, MA

TITLE

INSTRUMENTATION & CONTROLS WET WELLS & PUMPS

NO.	REVISIONS	DATE

DRAWN BY:	RB
DESIGNED BY:	MC
CHECKED BY:	MC
ISSUE DATE:	03/31/22
BETA JOB NO.:	5530-000

SCALE

AS SHOWN

UNLESS OTHERWISE NOTED OR CHANGED BY REPRODUCTION

For Review Only

SHEET NO.

I-2

6/6/2021 6:40 PM W:\YEAR - 2017\17003.00 - TAUNTON MAIN LIFT PUMP STATION\ELECTRICAL DEPARTMENT\17003.00 I&C.DWG

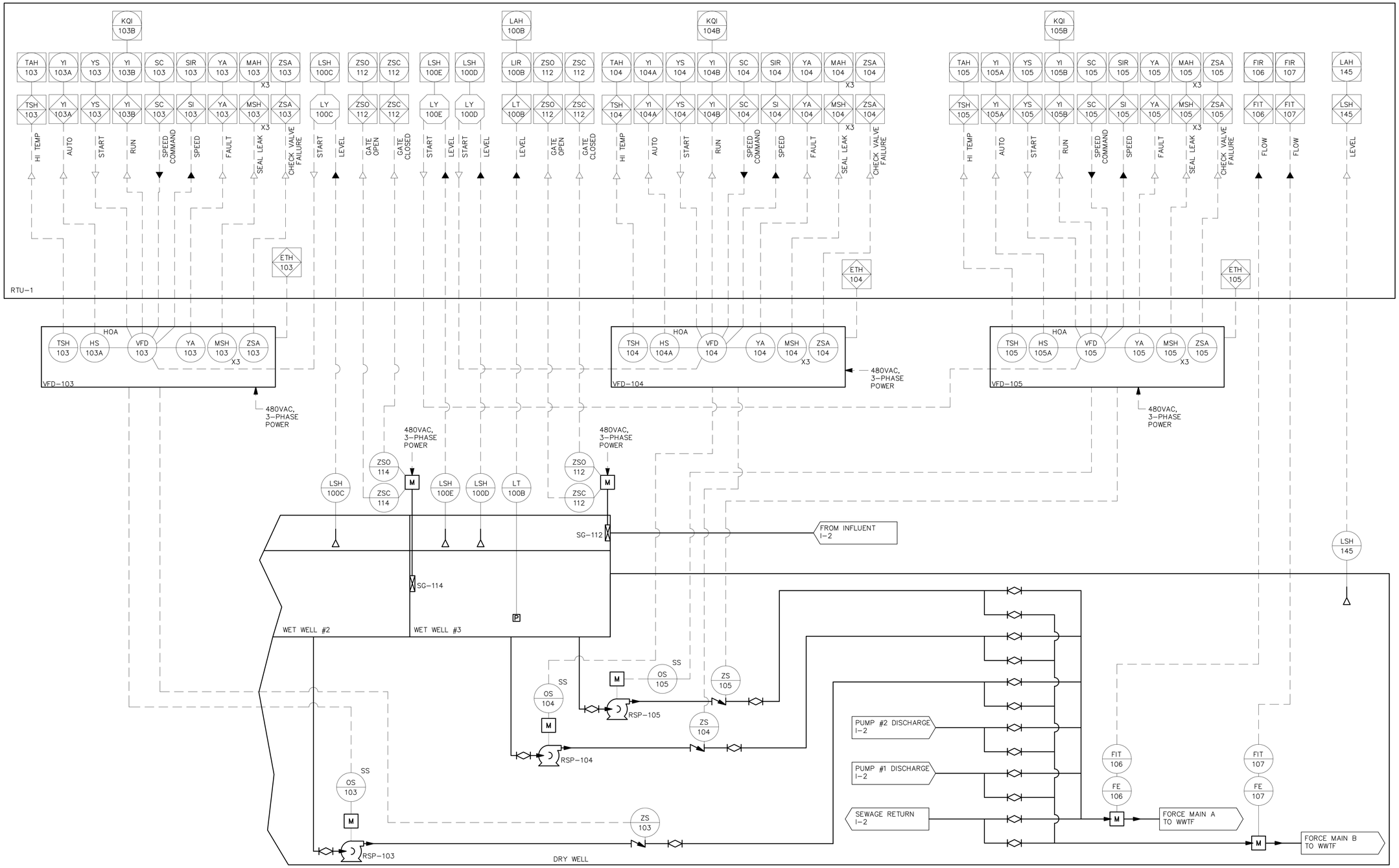

PREPARED BY

BETA
www.BETA-Inc.com

REGISTERED PROFESSIONAL

COMMONWEALTH OF MASSACHUSETTS
MICHAEL J. COTTER
ELECTRICAL
No. 40999
REGISTERED PROFESSIONAL ENGINEER

SUBCONSULTANT

SAR ENGINEERING, INC.

Mechanical/Electrical Engineers
150 Grossman Drive, Suite 309
Braintree, Massachusetts 02184
617 221-9220
web: www.sar.com

PROJECT

MAIN LIFT PUMP STATION

TAUNTON, MA

TITLE

INSTRUMENTATION & CONTROLS WET WELLS & PUMPS

NO.	REVISIONS	DATE

DRAWN BY:	RB
DESIGNED BY:	MC
CHECKED BY:	MC
ISSUE DATE:	03/31/22
BETA JOB NO.:	5530-000

SCALE

AS SHOWN

UNLESS OTHERWISE NOTED OR CHANGED BY REPRODUCTION

For Review Only

SHEET NO.

I-3

6/6/2021 6:40 PM W:\YEAR - 2017\17003.00 - TAUNTON MAIN LIFT PUMP STATION\ELECTRICAL DEPARTMENT\17003.00 I&C.DWG

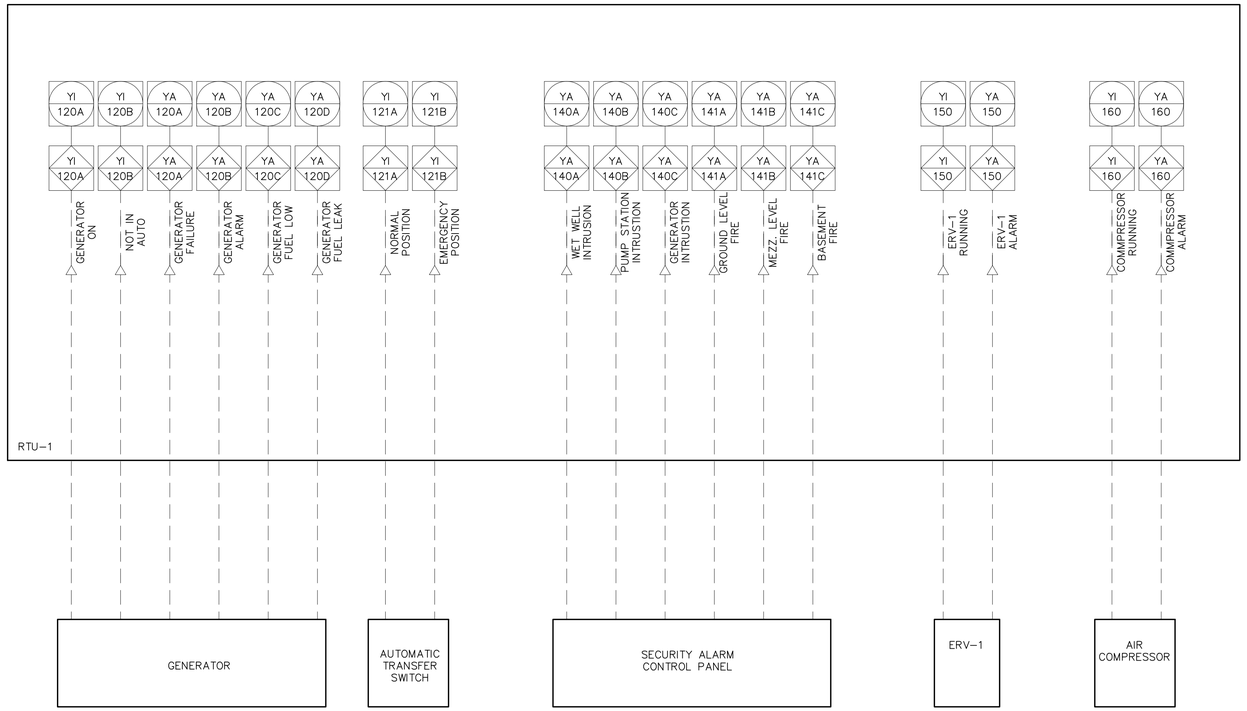

PREPARED BY

BETA
www.BETA-Inc.com

REGISTERED PROFESSIONAL

COMMONWEALTH OF MASSACHUSETTS
MICHAEL J. COTTER
ELECTRICAL
No. 40999
REGISTERED PROFESSIONAL ENGINEER

SUBCONSULTANT

S+R ENGINEERING, INC.

Mechanical/Electrical Engineers
150 Grossman Drive, Suite 309
Braintree, Massachusetts 02184
617 221-9220
web: www.sar.com

PROJECT

MAIN LIFT

PUMP STATION

TAUNTON, MA

TITLE

INSTRUMENTATION
& CONTROLS
STATION
MONITORING

NO.	REVISIONS	DATE

DRAWN BY: RB
DESIGNED BY: MC
CHECKED BY: MC
ISSUE DATE: 03/31/22
BETA JOB NO.: 5530-000

SCALE

AS SHOWN

UNLESS OTHERWISE NOTED OR CHANGED BY REPRODUCTION

For Review Only

SHEET NO.

I-4

6/6/2021 6:40 PM W:\YEAR - 2017\17003.00 - TAUNTON MAIN LIFT PUMP STATION\ELECTRICAL DEPARTMENT\17003.00 I&C.DWG

ELECTRICAL SYMBOLS

F1 / 1 a	LINEAR LIGHTING FIXTURES "F1" INDICATES FIXTURE TYPE – TYPICAL FOR ALL FIXTURES "1" INDICATES CIRCUIT NUMBER – TYPICAL FOR ALL FIXTURE "a" INDICATES THE SWITCH CONTROL – TYPICAL FOR ALL FIXTURES
	WALL MOUNTED LIGHTING FIXTURE.
	SURFACE OR PENDANT MOUNTED FIXTURE.
	EMERGENCY EXIT SIGN
	EMERGENCY LIGHTING BATTERY UNIT WITH TWO LIGHT HEADS
	REMOTE EMERGENCY LIGHTING UNIT WITH TWO LIGHTING HEADS PROVIDE 3/4", 2#10, 1#10GND TO NEAREST THE EMEGENCY LIGHTING BATTERY UNIT
S_a	SINGLE POLE SWITCH 120V, 20A "a" INDICATES THE SWITCH CONTROL
S_2	2–POLE SWITCH 120V, 20A 1 POLE FOR ROOM LIGHT FIXTURES, 1–POLE FOR EXHAUST FAN CONTROL
S_{3a}	3–WAY SWITCH 120V, 20A "a" INDICATES THE SWITCH CONTROL
TC	DIGITAL TIME CLOCK SWITCH
$_1$	DUPLEX RECEPTACLE, WEATHER–RESISTANT 120V, 20A WITH WEATHERPROOF COVER "1" INDICATES CIRCUIT NUMBER – TYPICAL FOR ALL RECEPTACLES
	DUPLEX RECEPTACLE 120V, 20A
	(2) DUPLEX (QUAD) RECEPTACLE 120V, 20A
$_{30}$	UNFUSED DISCONNECT SWITCH, "30" INDICATES 30 AMP RATING, PROVIDE 3–POLE UNLESS OTHERWISE INDICATED.
F $_{20}$	FUSED DISCONNECT SWITCH, "20" INDICATES 20 AMP FUSE RATING, PROVIDE 3–POLE UNLESS OTHERWISE INDICATED.
	3–PHASE RECEPTACLE
MCP / FVNR	WALL MOUNTED COMBINATION MOTOR STARTER WITH MOTOR CIRCUIT PROTECTOR, "FVNR" INDICATES TYPE OF MOTOR STARTER
VFD	ENCLOSED VARIABLE FREQUENCY DRIVE
Sm	MANUAL MOTOR STARTER 120V, 20A
J	JUNCTION BOX
HH	HAND HOLE
AR1	ALARM RELAY, "AR1" REFERS TO RELAY NAME DESIGNATION
CR1	CONTROL RELAY, "CR1" REFERS TO RELAY NAME DESIGNATION
M	MOTOR START RELAY
TR1	TIMING RELAY, "TR1" REFERS TO RELAY NAME DESIGNATION
	NORMALY OPEN RELAY CONTACT
	NORMALLY CLOSED RELAY CONTACT
	OPERATOR PUSH BUTTON NORMALLY OPEN CONTACT
	OPERATOR PUSH BUTTON NORMALLY CLOSED CONTACT
	PRESSURE SWITCH – CLOSES ON HIGH PRESSURE
	PRESSURE SWITCH – CLOSES ON LOW PRESSURE
	LIMIT SWITCH – CLOSES ON POSITION BEING MADE
	CLOSES SWITCH – OPENS ON POSITION BEING MADE

ELECTRICAL SYMBOLS

-------	UNDERGROUND CONDUIT DUCT BANK
PP1(1)	HOMERUN DESIGNATION TO PANEL PP1 CIRCUIT #1, WITH THE FOLOWING CONDUIT/WIRES UNLESS OTHERWISE NOTED: • 3/4"C WITH 2#12, 1#12GND FOR 20AMP SINGLE PHASE CIRCUITS. • 3/4"C WITH 3#12, 1#12GND FOR 20AMP THREE PHASE CIRCUITS. • 3/4"C WITH 2#10, 1#10GND FOR 30AMP SINGLE PHASE CIRCUITS. • 3/4"C WITH 3#10, 1#10GND FOR 30AMP THREE PHASE CIRCUITS. • 3/4"C WITH 2#8, 1#10GND FOR 40AMP & 50AMP SINGLE PHASE CIRCUITS. • 3/4"C WITH 3#8, 1#10GND FOR 40AMP & 50AMP THREE PHASE CIRCUITS.
	EYS TYPE CONDUIT SEAL
SPD	SURGE PROTECTION DEVICE
	UTILITY POLE
20 / 100 / LSIG	MOLDED CASE CIRCUIT BREAKER, 3–POLE UNLESS OTHERWISE INDICATED, "20" INDICATES TRIP AMPERE RATING, "100" INDCATES FRAME SIZE, "LSIG" LONG, SHORT, INSTANTANEOUS AND GROUND FAULT PROTECTION RESPECTIVELY "GFI" GROUND FAULT PROTECTION
	DRY TYPE TRANSFORMER
EH	ELECTRIC HAND HOLE (REFER TO SITE DETAILS)
	3/4"ø X 10'–0" COPPER CLAD GROUND ROD
	BUILDING GROUNDING SYSTEM
10	MOTOR, "10" INDICATES HORSEPOWER RATING
XX	CABLE/CONDUIT DESIGNATION, "XX" REFERS CABLE CONDUIT REFERENCE, REFER TO CABLE/CONDUIT SCHEDULES.
HS–XXXX	EMGERGENCY STOP OR HAND SWITCH (SUPPLIED BY DIV. 16), "XXXX" REFERS TO TAGNAME ID
OS–XXXX	OPERATOR STATION (SUPPLIED BY OTHER DIV. 17), "XXXX" REFERS TO TAGNAME ID
XX–XXXX	UNLESS OTHERWISE NOTED INSTRUMENATION OR PROCESS EQUIPMENT (SUPPLIED BY OTHER DIVISIONS) "XX–XXXX" REFERS TO TAGNAME ID
E	GENERATOR EMERGENCY STOP
O	OCCUPIED/UNOCCUPIED SELECTOR SWITCH. (SUPPLIED BY DIV. 15)
UI	HVAC RTU REMOTE USER INTERFACE (SUPPLIED BY DIV. 15)
T	THERMOSTAT (SUPPLIED BY DIV. 15)
M	MOTOR OPERATED DAMPER (SUPPLIED BY DIV. 15)

ELECTRICAL SYMBOLS

DS	MAGNETIC DOOR SWITCH
KP	SECURITY SYSTEM KEY PAD
HC	HELP CALL PUSHBUTTON
H	HEAT DETECTOR, COMBINATION RATE–OF–RISE AND FIXED TEMPERATURE
SACP	SECURITY ALARM CONTROL PANEL
GDC	GAS DETECTION SYSTEM – CONTROL PANEL (SUPPLIED BY DIV. 17)
GD	GAS DETECTION SYSTEM – GAS SENSOR DETECTOR (SUPPLIED BY DIV. 17)
A	GAS DETECTION SYSTEM – AMBER ALARM BEACON (SUPPLIED BY DIV. 17)
H	GAS DETECTION SYSTEM – ALARM HORN (SUPPLIED BY DIV.17)
R	HIGH LEVEL RED ALARM BEACON (SUPPLIED BY DIV. 17)

ABBREVIATIONS

(2)1"C, 3#8, #10GND	2, 1–INCH CONDUITS EACH CONDUIT CONTAINING 3–#8 AWG WIRES AND 1–#10 GROUND CONDUCTOR
3/4" CE	EMPTY CONDUIT. NUMERAL DENOTES SIZE
AFF	ABOVE FINISHED FLOOR
AFG	ABOVE FINISHED GRADE
AR	ALARM RELAY
ATS	AUTOMATIC TRANSFER SWITCH
CR	CONTROL RELAY
CP	CONTROL PANEL
DRG. DWG.	DRAWING
EAN	EXCEPT AS NOTED
EC	ELECTRICAL CONTRACTOR
ETM	ELAPSED TIME METER
FE	FLOW ELEMENT
FIT	FLOW INDICATOR TRANSMITTER
FS	FLOW SWITCH
FT	FLOW TRANSMITTER
FVNR	FULL VOLTAGE NON–REVERSING
GND, GRD	GROUNDING CONDUCTOR (EQUIPMENT)
HOA	HAND–OFF–AUTOMATIC
HH	HANDHOLE
J OR JB	JUNCTION BOX
JPB	JOG PUSHBUTTON
LE	LEVEL ELEMENT
LIT	LEVEL INDICATOR TRANSMITTER
LL	LOW LEVEL
LS	LEVEL SWITCH
LT	LEVEL TRANSMITTER
MCC	MOTOR CONTROL CENTER
MH	MANHOLE
MFR	MANUFACTURER
NTS	NOT TO SCALE
OH	OVERHEAD
OL	MOTOR OVERLOAD HEATER
PB	PUSHBUTTON CONTROL STATION MOMENTARY CONTACT TYPE, STOP START
PBL	PUSHBUTTON CONTROL STATION MOMENTARY TYPE WITH LOCK–OUT DEVICE, STOP–START
PBM	PUSHBUTTON CONTROL STATION MAINTAINED CONTACT TYPE, STOP START
PIT	PRESSURE INDICATOR TRANSMITTER
PL	PUSHBUTTON CONTROL STATION MOMENTARY TYPE WITH LOCK–OUT DEVICE, STOP
PS	PRESSURE SWITCH
PT	PRESSURE TRANSMITTER
RGS	RIGID GALVANIZED STEEL
SPD	SURGE SUPPRESSOR DEVICE
SOV	SOLENOID VALVE
S/S	SOFT STARTER
TB	TERMINAL BOX
TD	MOTOR TEMPERATURE DETECTOR
TR	TIMING RELAY
TS	TEMPERATURE SWITCH
TSP	TWISTED SHEILDED PAIR
TSTW	TWO SPEED TWO WINDING
TYP	TYPICAL
UG	UNDERGROUND
VFD	VARIABLE FREQUENCY DRIVE
WP	WATER PROOF

GENERAL NOTES

1. GENERAL CONTRACTOR TO PROVIDE CONCRETE HOUSEKEEPING PADS ON ALL FLOOR AND GRADE MOUNTED ELECTRICAL EQUIPMENT, EQUIPMENT INDICATED ON THE DRAWINGS IS THE MINIMUM REQUIREMENT FOR HOUSEKEEPING PADS. ADDITIONAL PADS MAYBE REQUIRED BASED ON THE ELECTRICAL CONTRACTORS MOUNTING METHODS, ELECTRICAL CONTRACTOR SHALL COORDINATE WITH GENERAL CONTRACTOR FOR ALL HOUSEKEEPING PAD SIZES AND LOCATIONS.
2. ALL CONDUIT AND EQUIPMENT SHALL BE INSTALLED AND GROUNDED IN ACCORDANCE WITH THE LATEST EDITION OF THE NATIONAL ELECTRICAL CODE AND APPLICABLE LOCAL CODES.
3. BONDING JUMPERS, CONDUIT CLAMPS AND POINTS OF ATTACHMENT ARE NOT SHOWN ON DRAWINGS. SIZE BONDING JUMPERS IN ACCORDANCE WITH THE NATIONAL ELECTRICAL CODE. THE POINTS OF ATTACHMENT OF THE GROUND CLAMPS SHALL BE ACCESSIBLE LOCATIONS.
4. EQUIPMENT & CONDUIT INSTALLATIONS ARE SHOWN DIAGRAMMATICALLY ONLY AND SHALL BE INSTALLED IN A MANNER TO PREVENT CONFLICTS WITH EQUIPMENT AND STRUCTURAL CONDITIONS. EXPOSED CONDUITS SHALL BE INSTALLED PARALLEL TO BEAMS AND WALLS.
5. CONDUITS SHALL BE TERMINATED SO AS TO PERMIT NEAT CONNECTIONS TO MOTORS AND OTHER EQUIPMENT.
6. NO CONDUIT SMALLER THAN 3/4" PIPE SIZE NOR WIRE SMALLER THAN NO. 12 A.W.G. SHALL BE USED UNLESS OTHERWISE NOTED.
7. RECEPTACLES AND SWITCHES SHALL BE MOUNTED 45" ABOVE FINISHED FLOOR.
8. THE WIRING AND BLOCK DIAGRAMS, QUANTITY AND SIZE OF WIRES AND CONDUIT REPRESENT A SUGGESTED ARRANGEMENT BASED UPON SELECTED STANDARD COMPONENTS OF ELECTRICAL AND PROCESS EQUIPMENT. MODIFICATIONS ACCEPTABLE TO THE ENGINEER MAY BE MADE BY THE CONTRACTOR TO ACCOMMODATE EQUIPMENT ACTUALLY PURCHASED. THE BASIC SEQUENCE AND METHOD OF CONTROL MUST BE MAINTAINED AS INDICATED ON THE DRAWINGS AND/OR SPECIFICATIONS.

DEMOLITION NOTES

1. UNLESS OTHERWISE NOTED, ALL EXISTING ELECTRICAL SYSTEMS WITHIN HATCH MARKS AND ASSOCIATED EQUIPMENT IS TO BE DEMOLISHED. DISCONNECT AND DE–ENERGIZE THE EQUIPMENT. REMOVE THE EQUIPMENT TO BE DEMOLISHED PER SECTION 02050. ALL CONDUIT, CABLING, BOXES, SUPPORTS, ETC, ASSOCIATED WITH THE DEMOLISHED EQUIPMENT SHALL BE REMOVED. THE EXPOSED CONDUIT AND SHALL BE REMOVED BACK TO SOURCE, ALL CABLING SHALL BE REMOVED BACK TO SOURCE.
2. NO DEVICE OR EQUIPMENT INDICATED FOR DEMOLITION WILL BE REUSED OR SALVAGED UNLESS SPECIFICALLY NOTED AS SUCH. ALL EQUIPMENT REMOVED SHALL BE REMOVED FROM SITE AND PROPERLY DISPOSED OF, PRIOR TO REMOVAL OF EQUIPMENT COORDINATE WITH OWNER FOR ANY EQUIPMENT THE OWNER WILL KEEP.
3. EXISTING EQUIPMENT INDICATED ON THE DEMOLITION PLANS ARE BASED ON SITE OBSERVATIONS AND IT IS NOT THE INTENTION OF THESE DRAWINGS TO SHOW ALL EQUIPMENT AND MATERIALS TO BE DISCONNECTED AND/OR REMOVED.

PREPARED BY

BETA
www.BETA-Inc.com

REGISTERED PROFESSIONAL

COMMONWEALTH OF MASSACHUSETTS
MICHAEL J. COTTER
ELECTRICAL
No. 40999
REGISTERED PROFESSIONAL ENGINEER

SUBCONSULTANT

S-A-R ENGINEERING, INC.

Mechanical/Electrical Engineers
150 Grossman Drive, Suite 309
Braintree, Massachusetts 02184
617 221-9220
web: www.sar.com

PROJECT

MAIN LIFT

PUMP STATION

TAUNTON, MA

TITLE

ELECTRICAL
LEGEND
AND NOTES

NO.	REVISIONS	DATE

DRAWN BY:	RB
DESIGNED BY:	MC
CHECKED BY:	MC
ISSUE DATE:	03/31/22
BETA JOB NO.:	5530-000

SCALE

UNLESS OTHERWISE NOTED OR CHANGED BY REPRODUCTION

For Review Only

SHEET NO.

E-1

1/19/2022 1:36 PM M:\YEAR - 2017\17003.00 - TAUNTON MAIN LIFT PUMP STATION\ELECTRICAL DEPARTMENT\17003.00 ELEC.DWG

NOTES:

1. EXISTING ELECTRICAL UTILITY SERVICE TO THE EXISTING PUMP STATION IS TO BE REMOVED AND REPLACED TO FACILITATE THE INSTALLATION OF THE NEW GENERATOR. THE EXISTING PUMP STATION'S GENERATOR SHALL BE UTILIZED TO ALLOW THE UTILITY SERVICE TO BE DISCONNECTED AND REPLACED AND KEEP THE EXISTING PUMP STATION OPERATING.

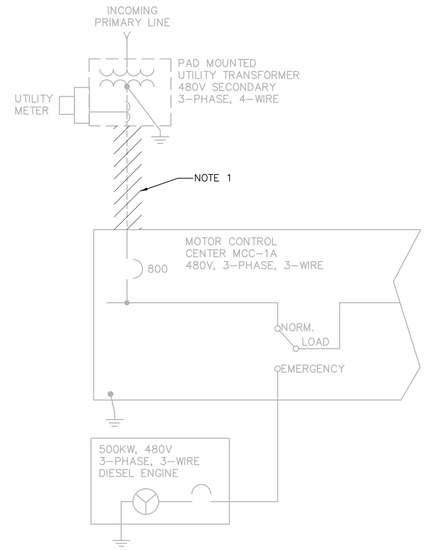

EXISTING PUMP STATION DEMOLITION ONE LINE DIAGRAM

NOT TO SCALE

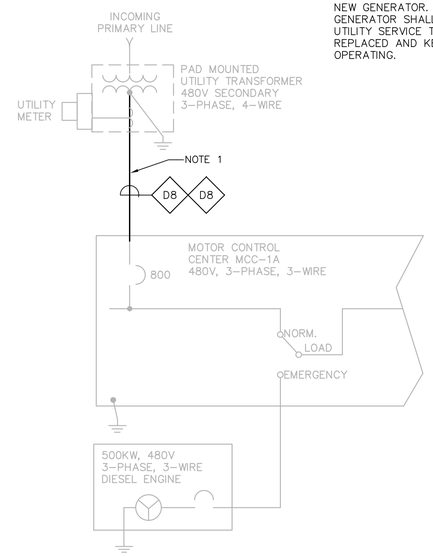

EXISTING PUMP STATION ONE LINE DIAGRAM

NOT TO SCALE

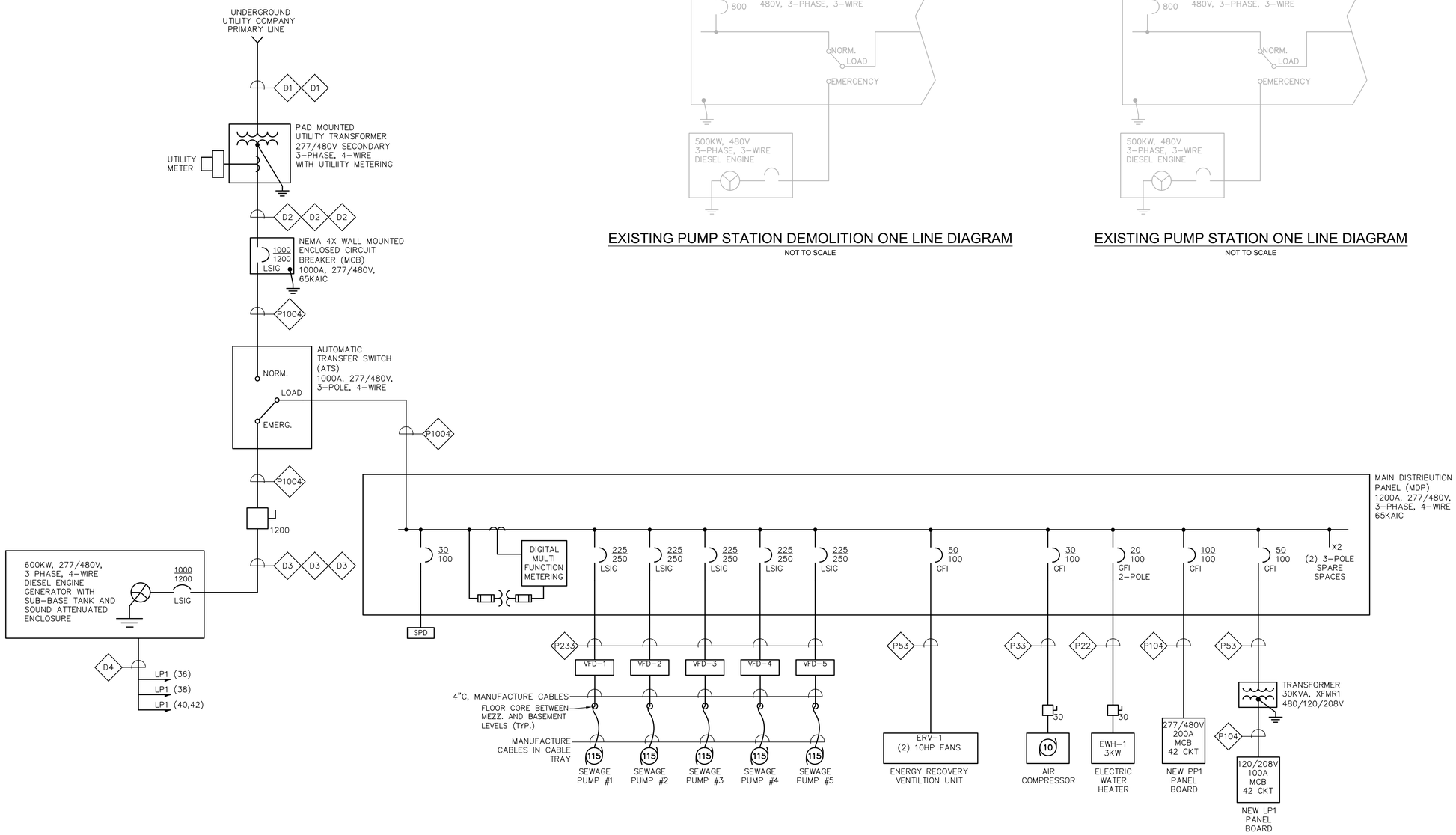

NEW PUMP STATION ONE LINE DIAGRAM

NOT TO SCALE

PREPARED BY

BETA
www.BETA-Inc.com

REGISTERED PROFESSIONAL

COMMONWEALTH OF MASSACHUSETTS
MICHAEL J. COTTER
ELECTRICAL
No. 40999
REGISTERED PROFESSIONAL ENGINEER

SUBCONSULTANT

SAR ENGINEERING, INC.

Mechanical/Electrical Engineers
150 Grossman Drive, Suite 309
Braintree, Massachusetts 02184
617 221-9220
web: www.sar.com

PROJECT

MAIN LIFT

PUMP STATION

TAUNTON, MA

TITLE

ELECTRICAL ONE LINE DIAGRAM

NO.	REVISIONS	DATE

DRAWN BY:	RB
DESIGNED BY:	MC
CHECKED BY:	MC
ISSUE DATE:	03/31/22
BETA JOB NO.:	5530-000

SCALE

UNLESS OTHERWISE NOTED OR CHANGED BY REPRODUCTION

For Review Only

SHEET NO.

E-2

1/19/2022 1:36 PM W:\YEAR - 2017\17003.00 - TAUNTON MAIN LIFT PUMP STATION\ELECTRICAL DEPARTMENT\17003.00 ELEC.DWG

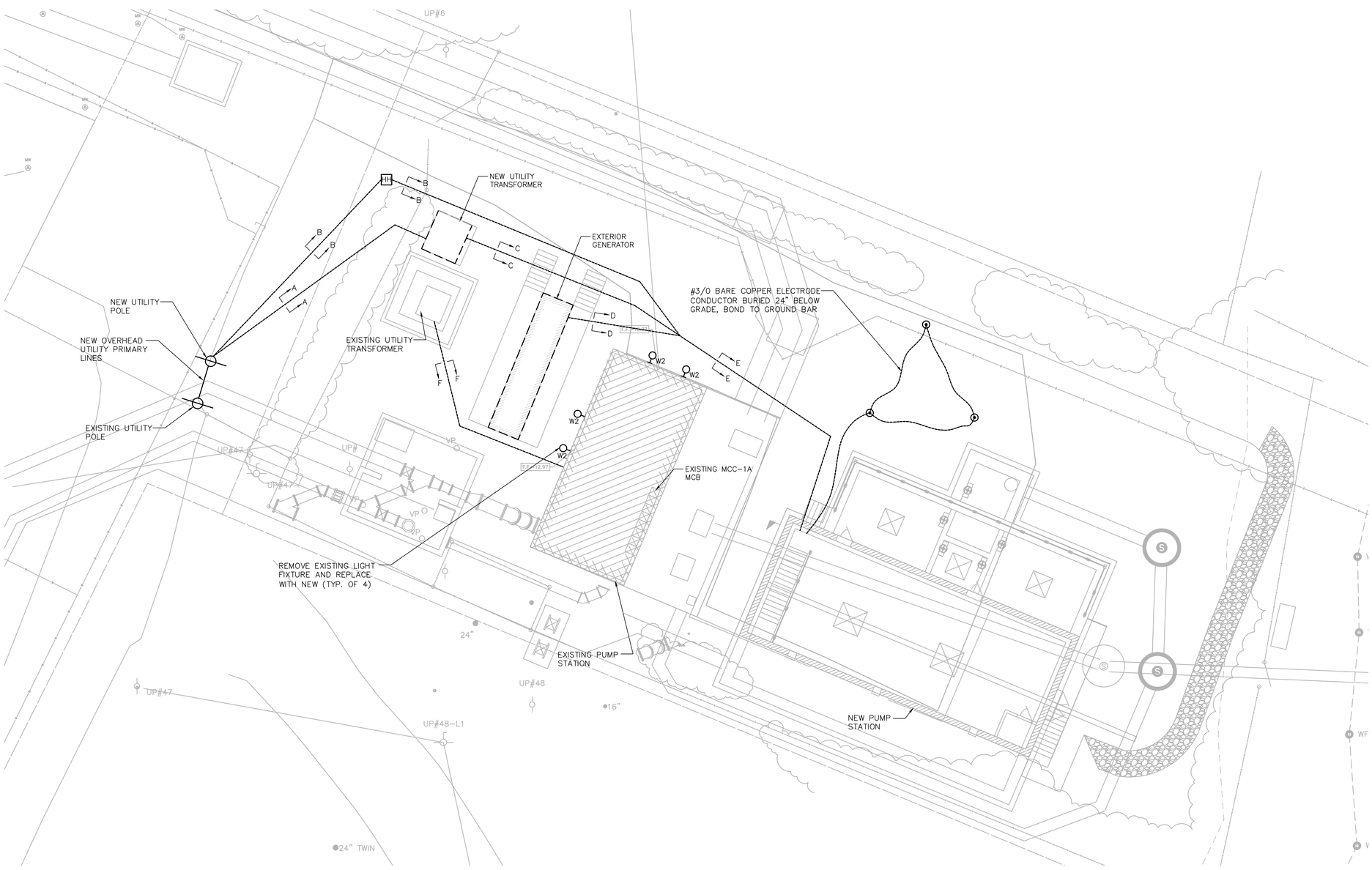

ELECTRICAL SITE PLAN
SCALE: 1" = 10'-0"

PREPARED BY

BETA
www.BETA-Inc.com

REGISTERED PROFESSIONAL

COMMONWEALTH OF MASSACHUSETTS
MICHAEL J. COTTER
ELECTRICAL
No. 40999
REGISTERED PROFESSIONAL ENGINEER

SUBCONSULTANT

S-A-R ENGINEERING, INC.

Mechanical/Electrical Engineers
150 Grossman Drive, Suite 309
Braintree, Massachusetts 02184
617 221-9220
web: www.sar.com

PROJECT

MAIN LIFT

PUMP STATION

TAUNTON, MA

TITLE

ELECTRICAL SITE PLAN

NO.	REVISIONS	DATE

DRAWN BY:	RB
DESIGNED BY:	MC
CHECKED BY:	MC
ISSUE DATE:	03/31/22
BETA JOB NO.:	5530-000

SCALE

UNLESS OTHERWISE NOTED OR CHANGED BY REPRODUCTION

For Review Only

SHEET NO.

E-3

1/19/2022 1:36 PM M:\YEAR - 2017\17003.00 - TAUNTON MAIN LIFT PUMP STATION\ELECTRICAL DEPARTMENT\17003.00 ELEC.DWG

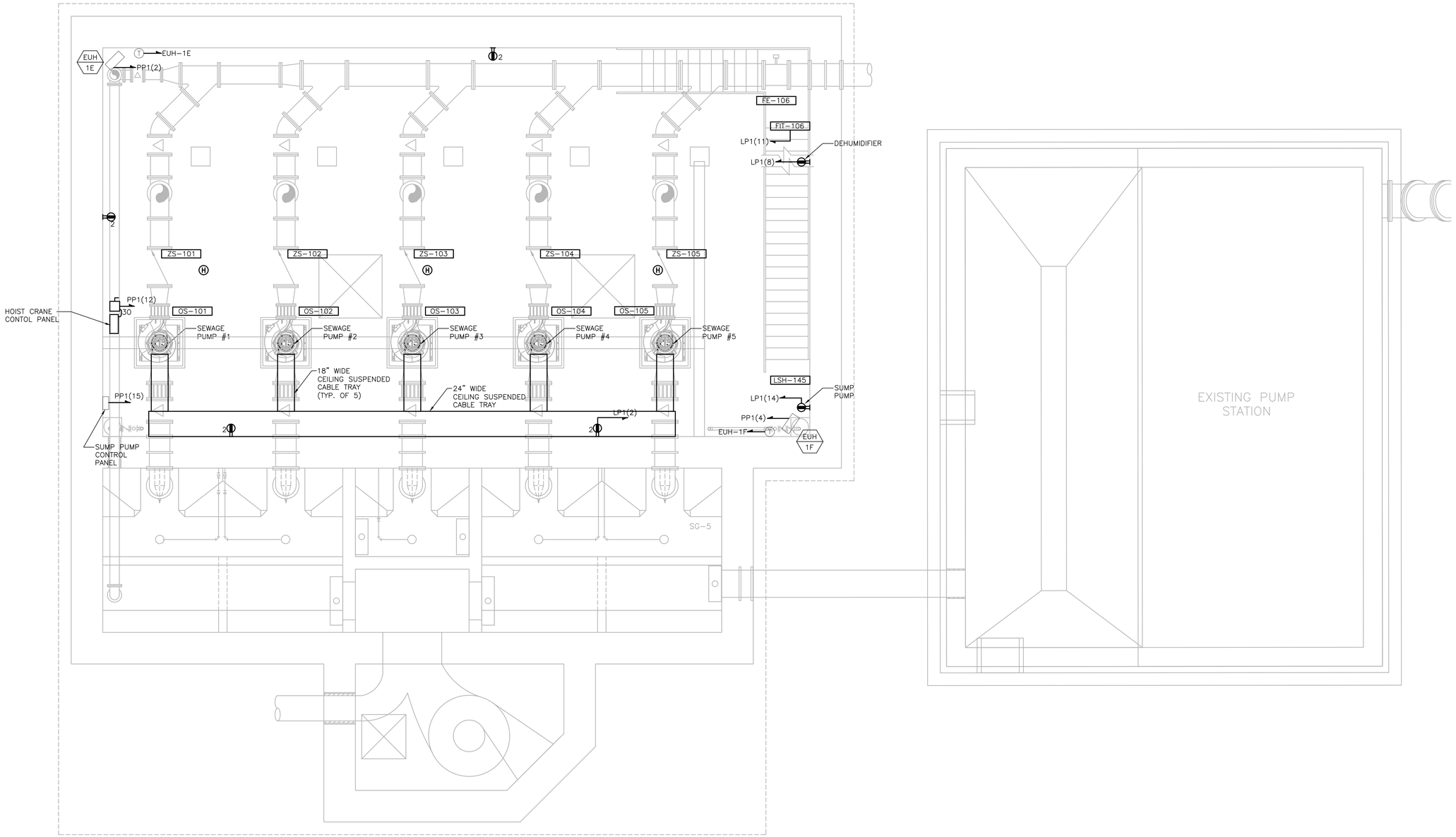

BASEMENT LEVEL POWER AND LOW VOLTAGE PLAN

SCALE: 1/4 " = 1'

PREPARED BY

BETA
www.BETA-Inc.com

REGISTERED PROFESSIONAL

COMMONWEALTH OF MASSACHUSETTS
MICHAEL J. COTTER
ELECTRICAL
No. 40999
REGISTERED PROFESSIONAL ENGINEER

SUBCONSULTANT

SAR ENGINEERING, INC.

Mechanical/Electrical Engineers
150 Grossman Drive, Suite 309
Braintree, Massachusetts 02184
617 221-9220
web: www.sar.com

PROJECT

MAIN LIFT

PUMP STATION

TAUNTON, MA

TITLE

BASEMENT LEVEL POWER AND LOW VOLTAGE PLAN

NO.	REVISIONS	DATE

DRAWN BY:	RB
DESIGNED BY:	MC
CHECKED BY:	MC
ISSUE DATE:	03/31/22
BETA JOB NO.:	5530-000

SCALE

UNLESS OTHERWISE NOTED OR CHANGED BY REPRODUCTION

For Review Only

SHEET NO.

E-4

1/19/2022 1:36 PM W:\YEAR - 2017\17003.00 - TAUNTON MAIN LIFT PUMP STATION\ELECTRICAL DEPARTMENT\17003.00 ELEC.DWG

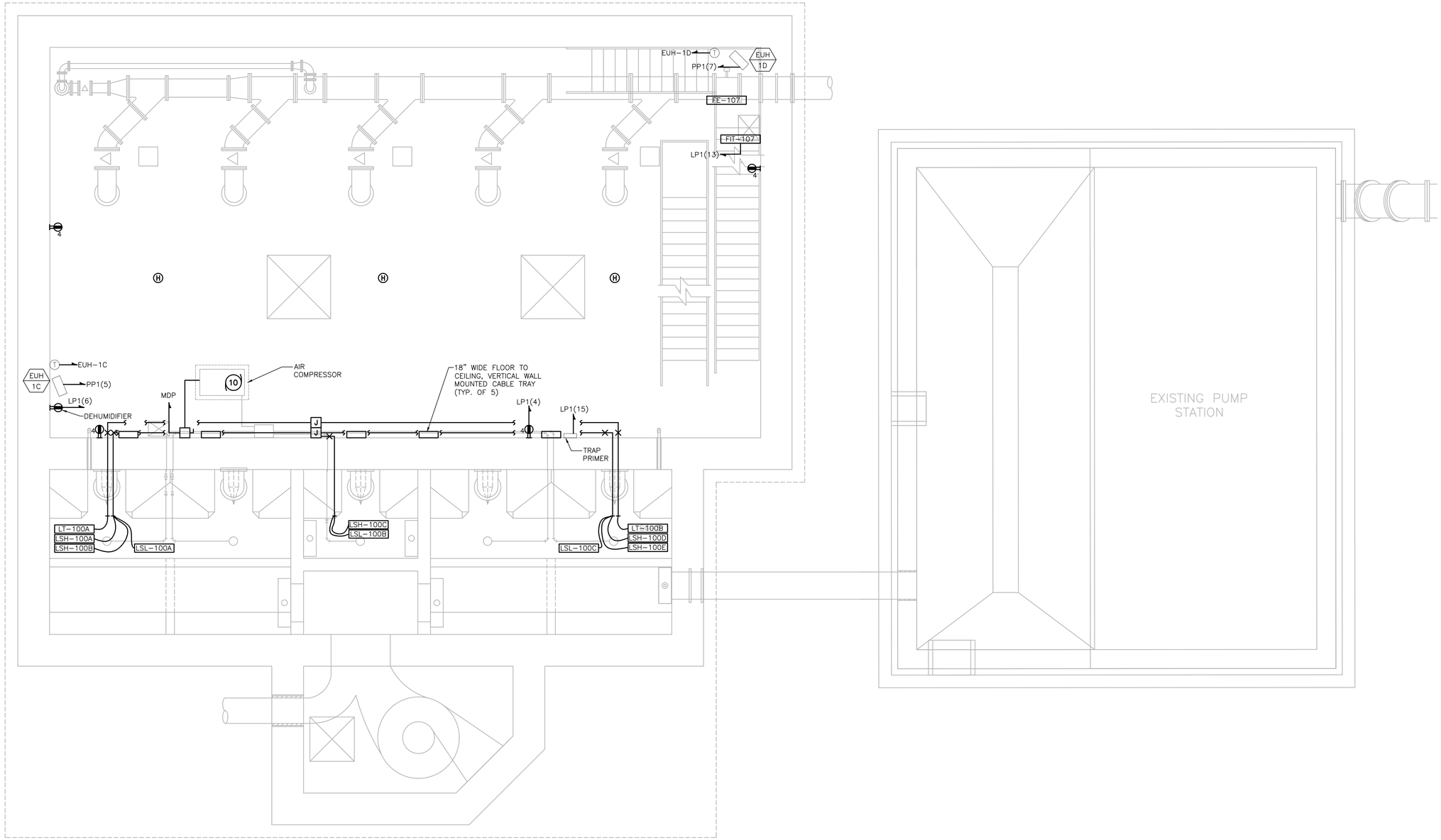

MEZZANINE LEVEL POWER AND LOW VOLTAGE PLAN

SCALE: 1/4 " = 1'

PREPARED BY

BETA
www.BETA-Inc.com

REGISTERED PROFESSIONAL

COMMONWEALTH OF MASSACHUSETTS
MICHAEL J. COTTER
ELECTRICAL
No. 40999
REGISTERED PROFESSIONAL ENGINEER

SUBCONSULTANT

SAR ENGINEERING, INC.

Mechanical/Electrical Engineers
150 Grossman Drive, Suite 309
Braintree, Massachusetts 02184
617 221-9220
web: www.sar.com

PROJECT

MAIN LIFT

PUMP STATION

TAUNTON, MA

TITLE

MEZZANINE LEVEL POWER AND LOW VOLTAGE PLAN

NO.	REVISIONS	DATE

DRAWN BY:	RB
DESIGNED BY:	MC
CHECKED BY:	MC
ISSUE DATE:	03/31/22
BETA JOB NO.:	5530-000

SCALE

UNLESS OTHERWISE NOTED OR CHANGED BY REPRODUCTION

For Review Only

SHEET NO.

E-5

1/19/2022 1:36 PM W:\YEAR - 2017\17003.00 - TAUNTON MAIN LIFT PUMP STATION\ELECTRICAL DEPARTMENT\17003.00 ELEC.DWG

NOTES:

1. ALL CONDUIT FOR WIRING ASSOCIATED WITH THE SLUICE GATES SHALL BE INSTALLED WITHIN THE WET WELL ON THE UNDERSIDE ROOF SLAB OF THE WET WELL.

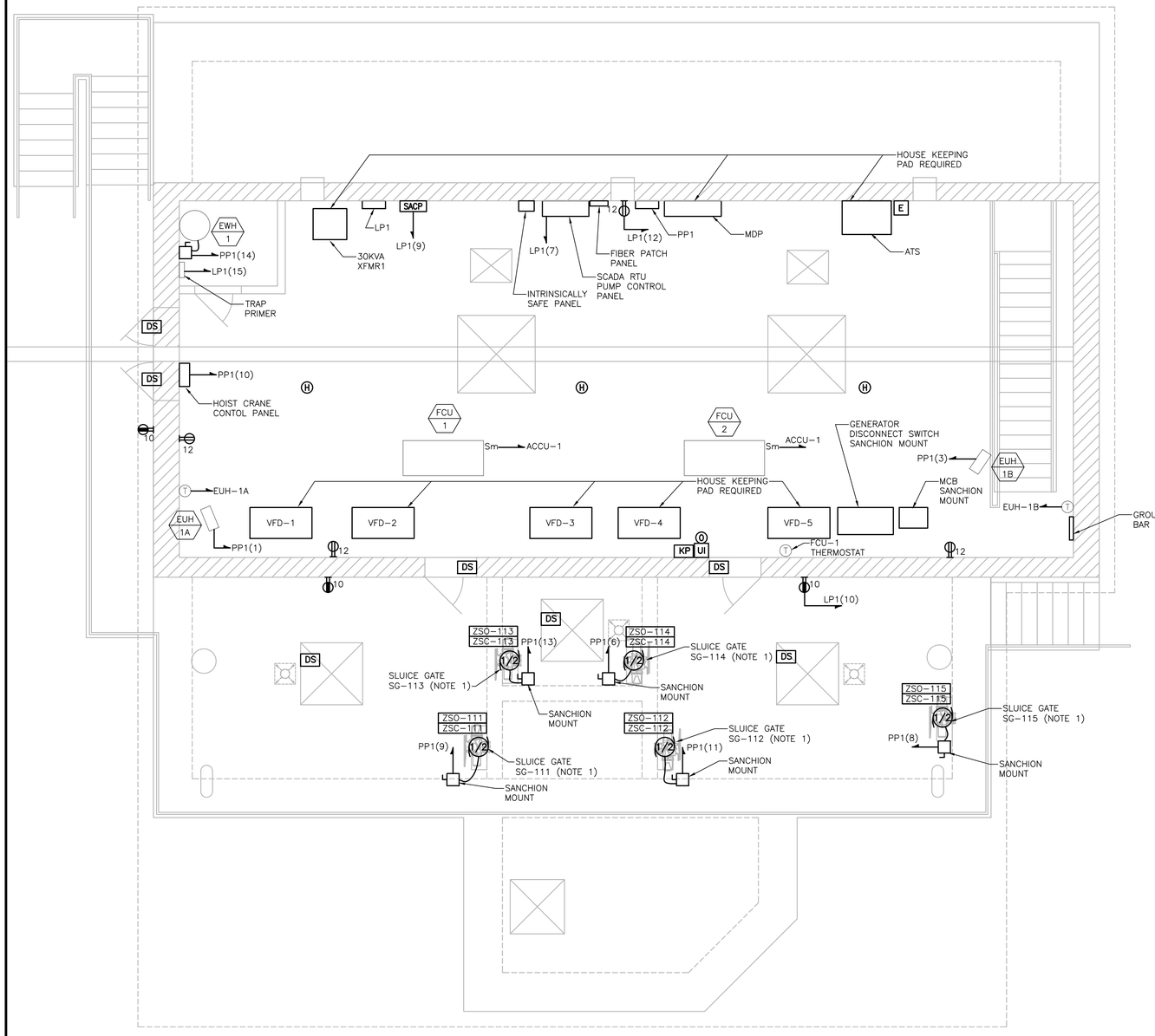

GROUND FLOOR POWER AND LOW VOLTAGE PLAN

SCALE: 1/4 " = 1'

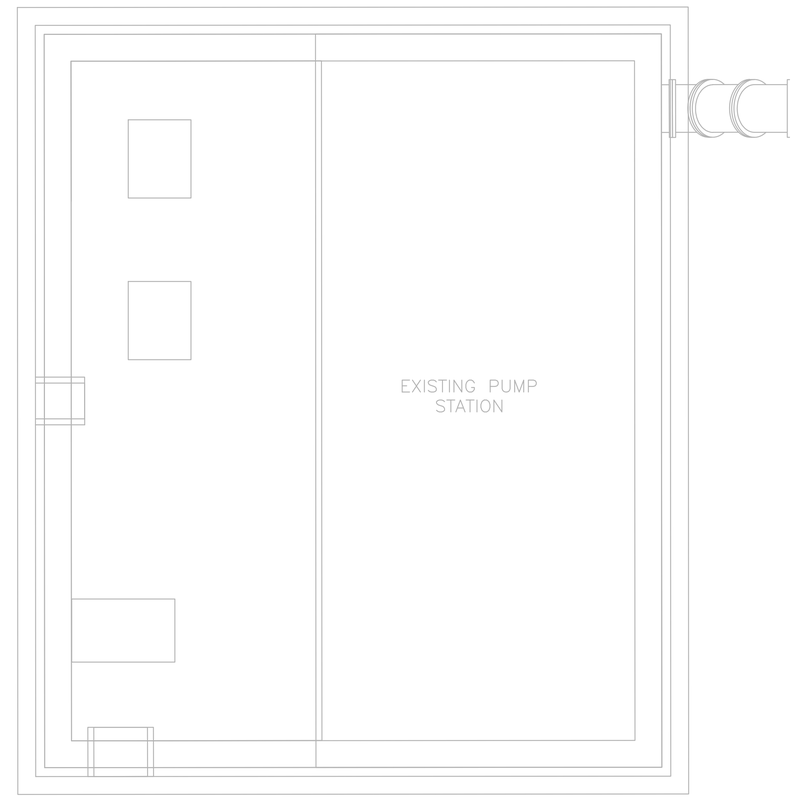

PREPARED BY

BETA
www.BETA-Inc.com

REGISTERED PROFESSIONAL

COMMONWEALTH OF MASSACHUSETTS
MICHAEL J. COTTER
ELECTRICAL
No. 40999
REGISTERED PROFESSIONAL ENGINEER

SUBCONSULTANT

S-A-R ENGINEERING, INC.

Mechanical/Electrical Engineers
150 Grossman Drive, Suite 309
Braintree, Massachusetts 02184
617 221-9220
web: www.sar.com

PROJECT

MAIN LIFT

PUMP STATION

TAUNTON, MA

TITLE

GROUND FLOOR POWER AND LOW VOLTAGE PLAN

NO.	REVISIONS	DATE

DRAWN BY:	RB
DESIGNED BY:	MC
CHECKED BY:	MC
ISSUE DATE:	03/31/22
BETA JOB NO.:	5530-000

SCALE

UNLESS OTHERWISE NOTED OR CHANGED BY REPRODUCTION

For Review Only

SHEET NO.

E-6

1/19/2022 1:36 PM W:\YEAR - 2017\17003.00 - TAUNTON MAIN LIFT PUMP STATION\ELECTRICAL DEPARTMENT\17003.00 ELEC.DWG

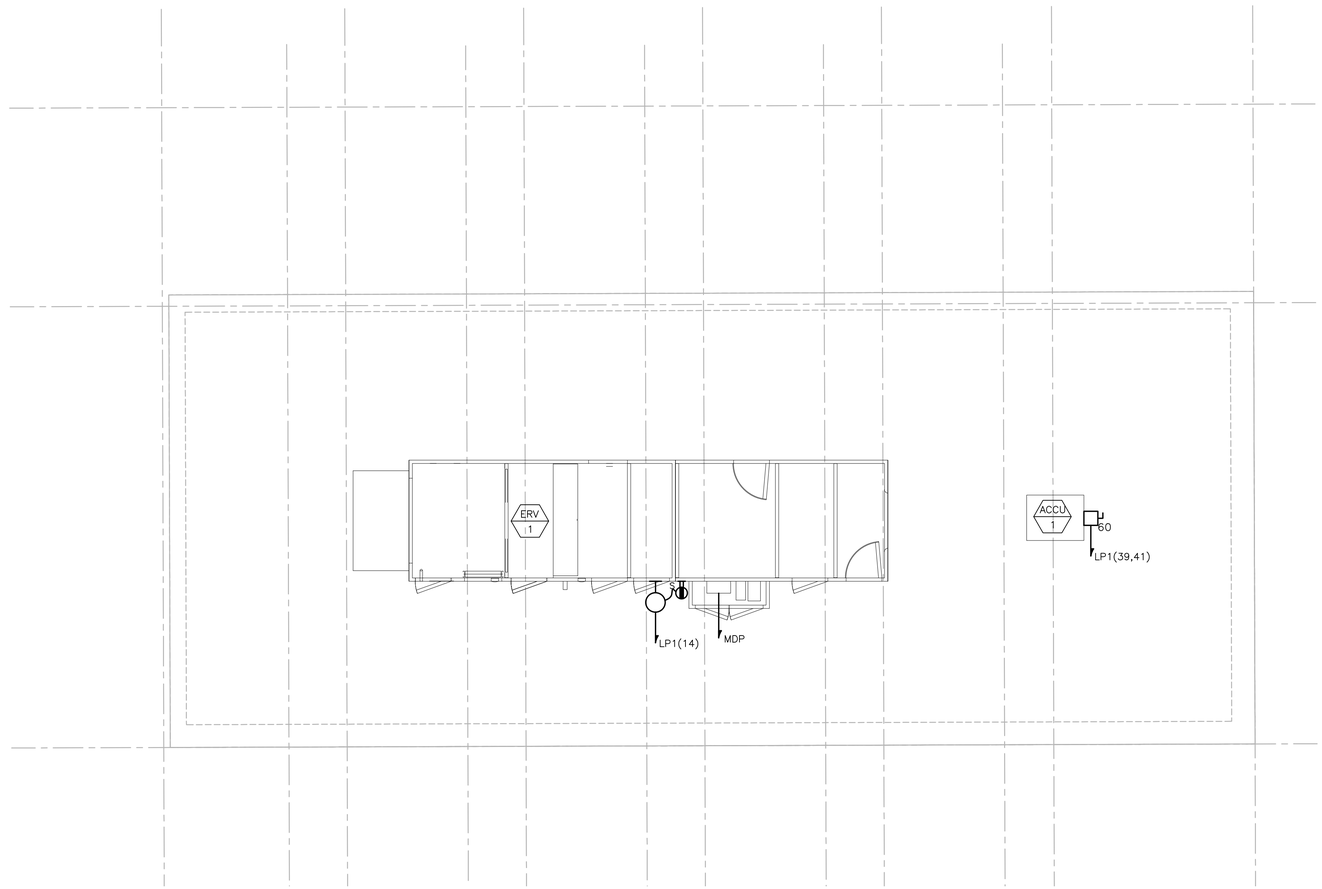

ROOF POWER PLAN
SCALE: 1/4 " = 1'

PREPARED BY

BETA
www.BETA-Inc.com

REGISTERED PROFESSIONAL

COMMONWEALTH OF MASSACHUSETTS
MICHAEL J. COTTER
ELECTRICAL
No. 40999
REGISTERED PROFESSIONAL ENGINEER

SUBCONSULTANT

SAR ENGINEERING, INC.

Mechanical/Electrical Engineers
150 Grossman Drive, Suite 309
Braintree, Massachusetts 02184
617 221-9220
web: www.sar.com

PROJECT

MAIN LIFT

PUMP STATION

TAUNTON, MA

TITLE

ROOF
POWER
PLAN

NO.	REVISIONS	DATE

DRAWN BY: RB
DESIGNED BY: MC
CHECKED BY: MC
ISSUE DATE: 03/31/22
BETA JOB NO.: 5530-000

SCALE

UNLESS OTHERWISE NOTED OR CHANGED BY REPRODUCTION

For Review Only

SHEET NO.
E-7

1/19/2022 1:36 PM W:\YEAR - 2017\17003.00 - TAUNTON MAIN LIFT PUMP STATION\ELECTRICAL DEPARTMENT\17003.00 ELEC.DWG

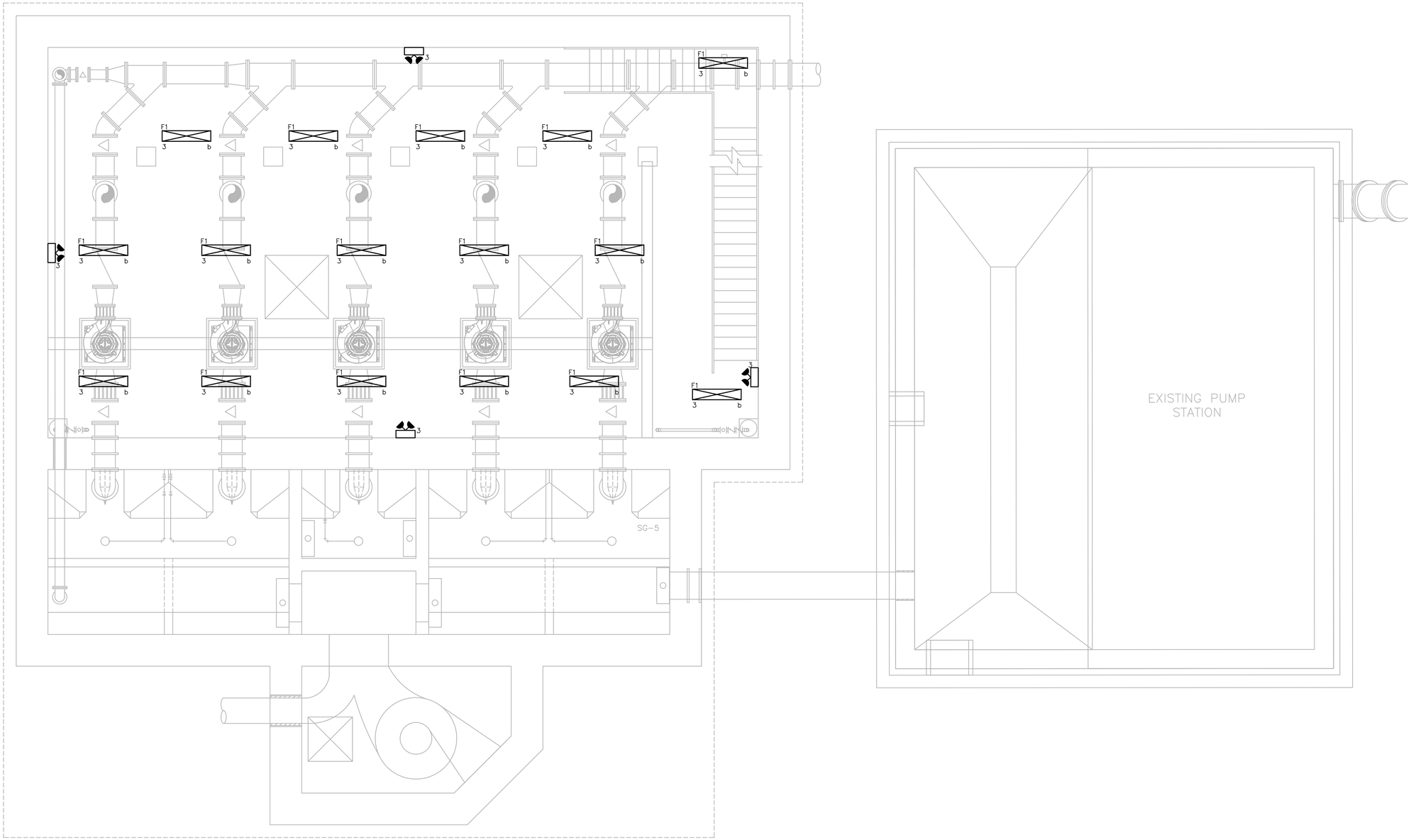

BASEMENT LEVEL LIGHTING PLAN

SCALE: 1/4 " = 1'

PREPARED BY

BETA
www.BETA-Inc.com

REGISTERED PROFESSIONAL

COMMONWEALTH OF MASSACHUSETTS
MICHAEL J. COTTER
ELECTRICAL
No. 40999
REGISTERED PROFESSIONAL ENGINEER

SUBCONSULTANT

S-A-R ENGINEERING, INC.

Mechanical/Electrical Engineers
150 Grossman Drive, Suite 309
Braintree, Massachusetts 02184
617 221-9220
web: www.sar.com

PROJECT

MAIN LIFT

PUMP STATION

TAUNTON, MA

TITLE

BASEMENT
LEVEL
LIGHTING
PLAN

NO.	REVISIONS	DATE

DRAWN BY:	RB
DESIGNED BY:	MC
CHECKED BY:	MC
ISSUE DATE:	03/31/22
BETA JOB NO.:	5530-000

SCALE

UNLESS OTHERWISE NOTED OR CHANGED BY REPRODUCTION

For Review Only

SHEET NO.

E-8

1/19/2022 1:36 PM W:\YEAR - 2017\17003.00 - TAUNTON MAIN LIFT PUMP STATION\ELECTRICAL DEPARTMENT\17003.00 ELEC.DWG

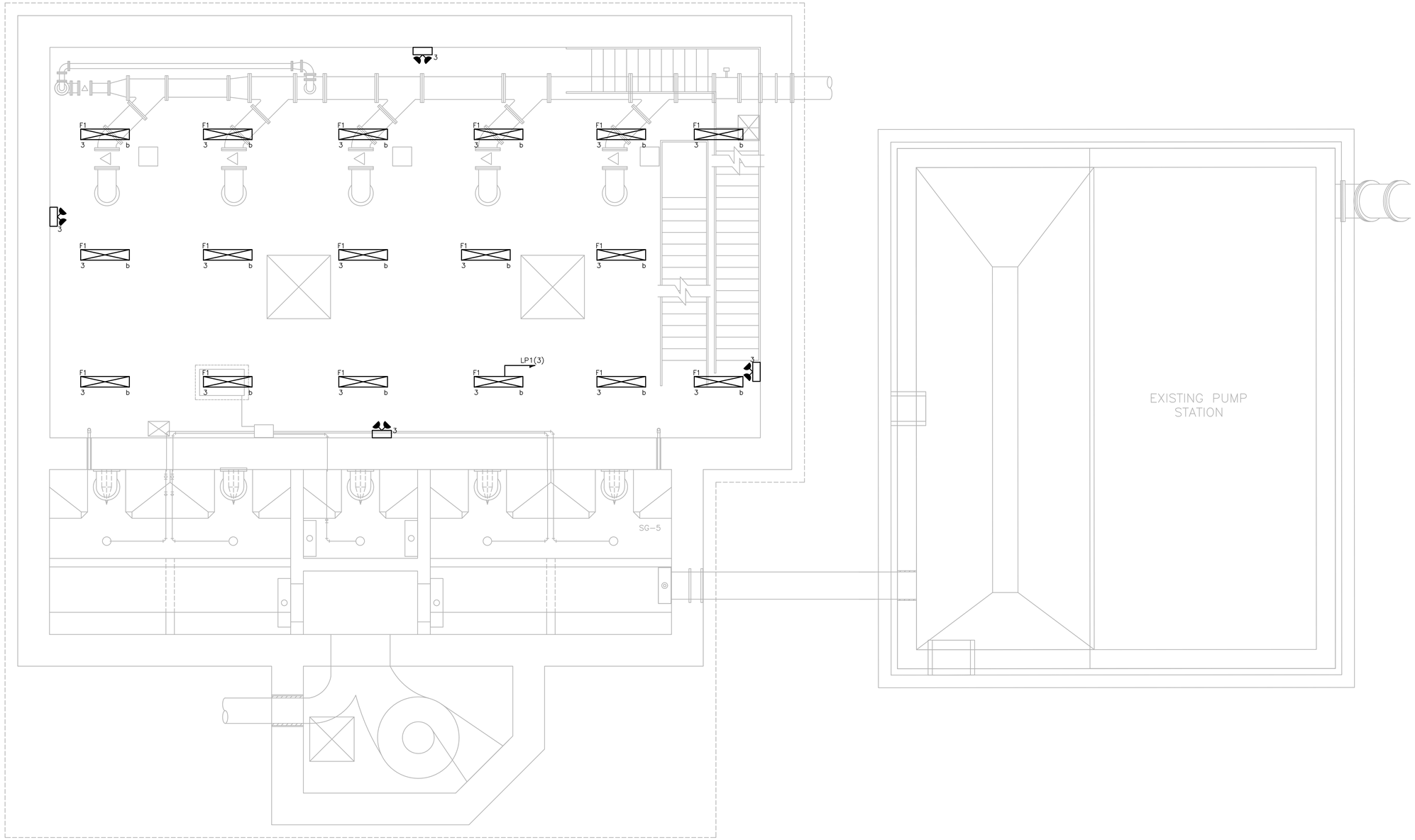

MEZZANINE LEVEL LIGHTING PLAN

SCALE: 1/4 " = 1'

PREPARED BY

BETA
www.BETA-Inc.com

REGISTERED PROFESSIONAL

COMMONWEALTH OF MASSACHUSETTS
MICHAEL J. COTTER
ELECTRICAL
No. 40999
REGISTERED PROFESSIONAL ENGINEER

SUBCONSULTANT

S-A-R ENGINEERING, INC.

Mechanical/Electrical Engineers
150 Grossman Drive, Suite 309
Braintree, Massachusetts 02184
617 221-9220
web: www.sar.com

PROJECT

MAIN LIFT

PUMP STATION

TAUNTON, MA

TITLE

MEZZANINE LEVEL LIGHTING PLAN

NO.	REVISIONS	DATE

DRAWN BY:	RB
DESIGNED BY:	MC
CHECKED BY:	MC
ISSUE DATE:	03/31/22
BETA JOB NO.:	5530-000

SCALE

UNLESS OTHERWISE NOTED OR CHANGED BY REPRODUCTION

For Review Only

SHEET NO.

E-9

1/19/2022 1:36 PM W:\YEAR - 2017\17003.00 - TAUNTON MAIN LIFT PUMP STATION\ELECTRICAL DEPARTMENT\17003.00 ELEC.DWG

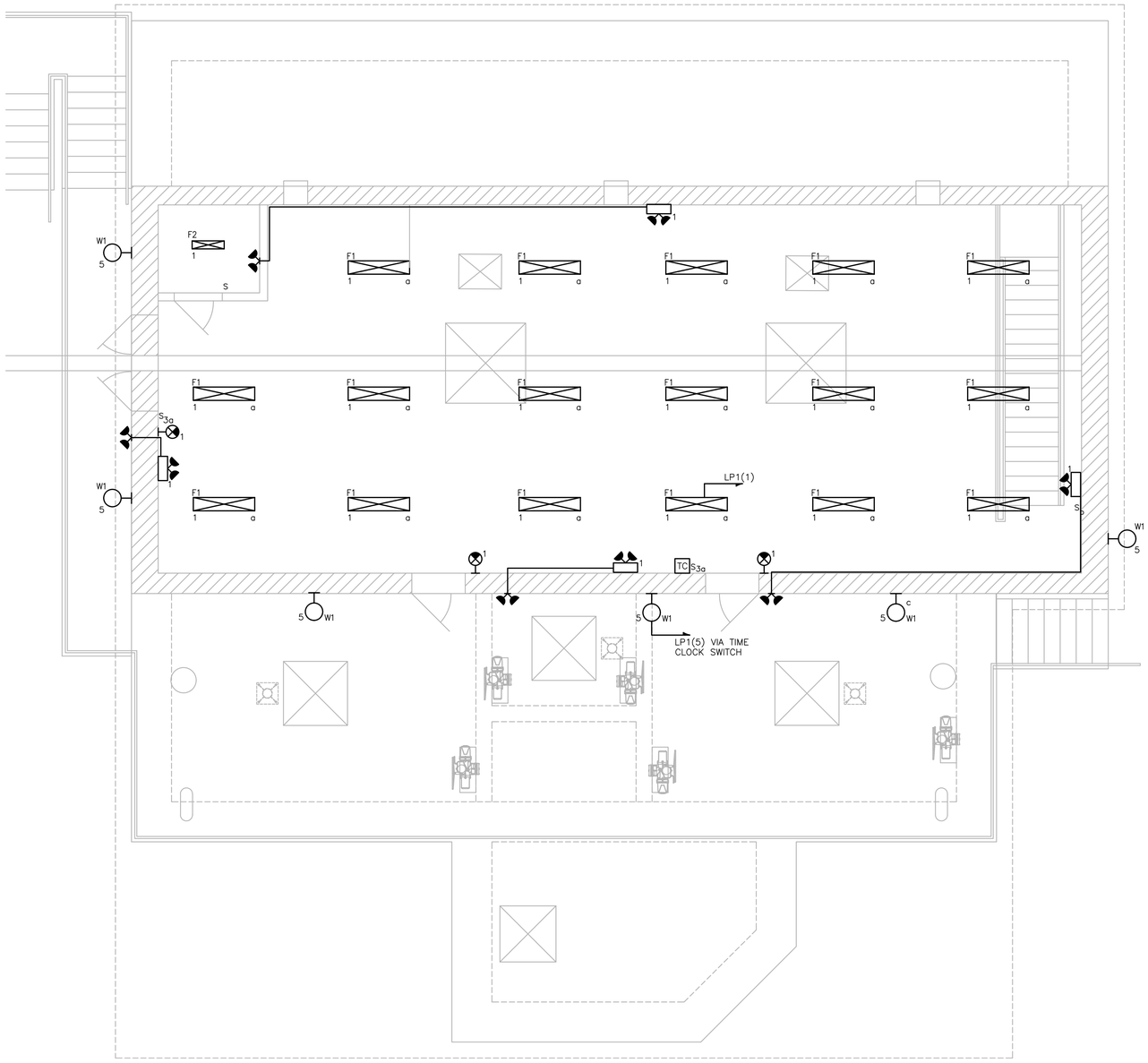

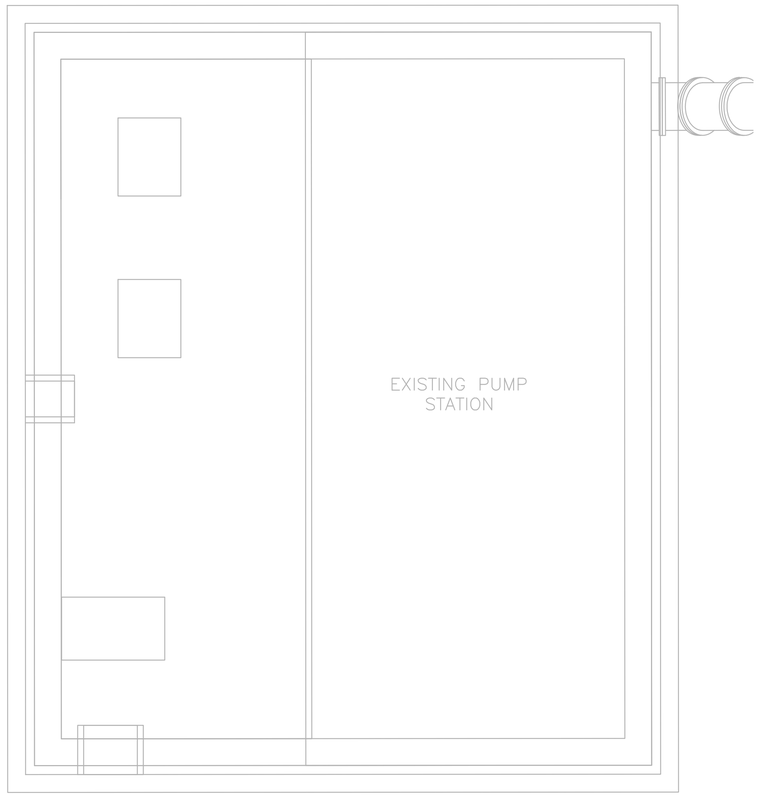

GROUND LEVEL LIGHTING PLAN
SCALE: 1/4 " = 1'

PREPARED BY

BETA
www.BETA-Inc.com

REGISTERED PROFESSIONAL

COMMONWEALTH OF MASSACHUSETTS
MICHAEL J. COTTER
ELECTRICAL
No. 40999
REGISTERED PROFESSIONAL ENGINEER

SUBCONSULTANT

S-A-R
ENGINEERING, INC.

Mechanical/Electrical Engineers
150 Grossman Drive, Suite 309
Braintree, Massachusetts 02184
617 221-9220
web: www.sar.com

PROJECT

MAIN LIFT

PUMP STATION

TAUNTON, MA

TITLE

GROUND
LEVEL
LIGHTING
PLAN

NO.	REVISIONS	DATE

DRAWN BY:	RB
DESIGNED BY:	MC
CHECKED BY:	MC
ISSUE DATE:	03/31/22
BETA JOB NO.:	5530-000

SCALE

UNLESS OTHERWISE NOTED OR CHANGED BY REPRODUCTION

For Review Only

SHEET NO.
E-10

1/19/2022 1:36 PM W:\YEAR - 2017\17003.00 - TAUNTON MAIN LIFT PUMP STATION\ELECTRICAL DEPARTMENT\17003.00 ELEC.DWG

LIGHTING FIXTURE SCHEDULE

TYPE	DESCRIPTION	MANUFACTURER & CATALOG SERIES	LAMPS TYPE	LAMPS LUMENS	VOLTS	WATTS	MOUNTING TYPE	MOUNTING HEIGHT	REMARKS
F1	48" LED ENCLOSED AND GASKETED INDUSTRIAL LIGHTING FIXTURE.	LITHONIA FEM-L48-4000LM-IMAFL-MVOLT-35K-80CRI	LED 3500K	3615lm	120	24	PENDENT	11'AFF – GROUND LEVEL 14'AFF – MEZZ. LEVEL 15'AFF – BASEMENT LEVEL	–
F2	24" LED ENCLOSED AND GASKETED INDUSTRIAL LIGHTING FIXTURE.	LITHONIA DMW2-L24-2000LM-AFL-MD-MVOLT-35K-80CRI	LED 3500K	2000lm	120	14	CEILING	–	–
W1	EXTERIOR BUILDING MOUNTED LED WALL PACK LIGHT FIXTURE	LITHONIA TWP-LED-20C-700-50K-T3M-MVOLT-DDXB	LED 5000K	4233lm	120	45	WALL	12' AFG	FIXTURE CIRCUIT TO BE CONNECTED TO AND CONTROLLED BY A LIGHTING CONTROL PANEL
W2	EXTERIOR BUILDING MOUNTED LED MINI WALL PACK LIGHT FIXTURE	LITHONIA TWS-LED-P1-50K	LED 5000K	1476lm	120	25	WALL	REPLACE EXISTING IN PLACE	EXISTING FIXTURE CIRCUIT TO BE UTILIZED
	SELF CONTAINED EMERGENCY LIGHTING BATTERY UNIT NEMA 4 WITH TWO LIGHTING HEADS	REFER TO SPECIFICATIONS			120	8W	WALL		INSTALL 3/4"C, 2#12, 1#12GND TO REMOTE HEADS
	SEALED-BEAM WEATHERPROOF REMOTE LIGHTING FIXTURE WITH TWO LIGHTING HEADS	REFER TO SPECIFICATIONS			120	8W	WALL		
	EMERGENCY EXIT SIGN LED TYPE WITH BATTERY BACK-UP NEMA 4X	REFER TO SPECIFICATIONS			120		WALL		

LIGHTING FIXTURE SCHEDULES NOTES:

1. THE CATALOG NUMBERS LISTED ARE GIVEN AS A GUIDE TO THE DESIGN AND QUALITY OF FIXTURE DESIRED. EQUIVALENT DESIGNS, MATERIALS, DIMENSIONS, COEFFICIENT OF UTILIZATIONS AND EQUAL QUALITY FIXTURES OF OTHER MANUFACTURERS WILL BE ACCEPTABLE.

POWER CABLE/CONDUIT SCHEDULE

SYMBOL	CONDUIT SIZE*	CONDUCTORS*	GND*
P22	3/4"	(2)#12	(1)#12
P23	3/4"	(3)#12	(1)#12
P26	3/4"	(6)#12	(1)#12
P32	3/4"	(2)#10	(1)#10
P33	3/4"	(3)#10	(1)#10
P53	3/4"	(3)#8	(1)#10
P54	3/4"	(4)#8	(1)#10
P63	1"	(3)#6	(1)#8
P64	1"	(4)#6	(1)#8
P83	1 1/4"	(3)#4	(1)#8
P84	1 1/4"	(4)#4	(1)#8
P103	1 1/2"	(3)#3	(1)#6
P104	1 1/2"	(4)#3	(1)#6
P113	1 1/2"	(3)#2	(1)#6
P114	1 1/2"	(4)#2	(1)#6
P133	2"	(3)#1	(1)#6
P134	2"	(4)#1	(1)#6
P153	2"	(3)#1/0	(1)#6
P154	2"	(4)#1/0	(1)#6
P173	2 1/2"	(3)#2/0	(1)#6
P174	2 1/2"	(4)#2/0	(1)#6
P203	2 1/2"	(3)#3/0	(1)#4
P204	2 1/2"	(4)#3/0	(1)#4
P233	3"	(3)#4/0	(1)#4
P234	3"	(4)#4/0	(1)#4
P253	3"	(3)250KCMIL	(1)#4
P254	3"	(4)250KCMIL	(1)#4
P404	4"	(4)500KCMIL	(1)#3
P804	(2)4"	(8)500KCMIL	(2)#1/0
P1004	(3)4"	(12)500KCMIL	(3)#2/0

SIGNAL CABLE/CONDUIT SCHEDULE

SYMBOL	CONDUIT SIZE	CONDUCTORS
S	1"	VENDER PROVIDED
S1	3/4"	1-2/C#16 TSP
S13	3/4"	1-3/C#16 TSP
S2	3/4"	2-2/C#16 TSP
S23	3/4"	2-3/C#16 TSP
S3	1"	3-2/C#16 TSP
S33	1"	3-3/C#16 TSP
S4	1"	4-2/C#16 TSP
S5	1"	5-2/C#16 TSP
S6	1 1/2"	6-2/C#16 TSP
S7	1 1/2"	7-2/C#16 TSP
S8	1 1/2"	8-2/C#16 TSP
S9	1 1/2"	9-2/C#16 TSP
S10	2"	10-2/C#16 TSP
TC1	3/4"	8/C#18

TELE/DATA CABLE/CONDUIT SCHEDULE

SYMBOL	CONDUIT SIZE	CONDUCTORS
TD1	1"	1-CAT6 CABLE
TD2	1"	2-CAT6 CABLE
FO6	1"	6 STRAND FIBER OPTIC

CONTROL CABLE/CONDUIT SCHEDULE

SYMBOL	CONDUIT SIZE	CONDUCTORS
C2	3/4"	2#14
C4	3/4"	4#14
C5	3/4"	5#14
C6	3/4"	6#14
C7	3/4"	7#14
C8	3/4"	8#14
C9	3/4"	9#14
C10	3/4"	10#14
C12	3/4"	12#14
C16	1"	16#14
C20	1"	20#14
C30	1"	30#14

NOTE: CONDUIT AND CONDUCTOR SIZES ARE TO BE PER THE ABOVE SCHEDULES UNLESS OTHERWISE NOTED.

PANELBOARD SCHEDULE

NO. LP1 LOCATION: CONTROL ROOM

120/208 V, 3 PH, 4 W, 100 A MAINS — 100 A SOLID NEUTRAL — 100 A MCB

10,000 AIC AT 120 V — 100 A GROUND BUS — – A MLO — SURFACE MOUNTING

	CIRCUIT	DESCRIPTION OF LOAD	LOAD (KVA) AØ	BØ	CØ	BREAKER TRIP	POLE	BREAKER POLE	TRIP	LOAD (KVA) AØ	BØ	CØ	DESCRIPTION OF LOAD	CIRCUIT	
	1	GROUND FLOOR LIGHTING	0.6			20	1	1	20	0.8			BASEMENT RECEPTACLES	2	*
*	3	MEZZ. & BASEMENT FLOOR LIGHTING		1.1		20	1	1	20		0.8		MEZZ. FLOOR RECEPTACLES	4	*
	5	EXTERIOR LIGHTS VIA TIME CLOCK SWITCH			0.4	20	1	1	20			0.9	MEZZ. DEHUMIDIFIER	6	*
	7	SCADA RTU CONTROL PANEL	1.0			20	1	1	20	0.9			BASEMENT DEHUMIDIFIER	8	*
	9	SECURITY ALARM CONTROL PANEL		0.5		20	1	1	20		0.6		EXTERIOR RECEPTACLES	10	*
*	11	FORCE MAIN A FLOW METER			0.1	20	1	1	20			0.8	GROUND FLOOR RECEPTACLES	12	*
*	13	FORCE MAIN B FLOW METER	0.1			20	1	1	20	0.5			ERV-1 RECEPTACLES AND LIGHTS	14	
*	15	TRAP PRIMERS		0.2		20	1	1	20		–		SPARE	16	
	17	SPARE			–	20	1	1	20			–	SPARE	18	
	19	SPARE	–			20	1	1	20	–			SPARE	20	
	21	SPARE		–		20	1	1	20		–		SPARE	22	
	23	SPARE			–	20	1	1	20			–	SPARE	24	
	25	SPARE	–			20	1	1	20	–			SPARE	26	
	27	SPARE		–		20	1	1	20		–		SPARE	28	
	29	SPARE			–	20	1	1	20			–	SPARE	30	
	31	SPARE	–			20	1	1	20	–			SPARE	32	
	33	SPARE		–		20	1	1	20		–		SPARE	34	
	35	SPARE			–	20	1	1	20			1.0	GENERATOR ALTERNATOR HEATER	36	
	37	SPARE	–			20	1	1	20	0.5			GENERATOR BATTERY CHARGER	38	
	39	ACCU-1		3.3		40	2	2	30		2.0		GENERATOR BLOCK JACKET HEATER	40	
	41				3.3							2.0		42	
		SUB-TOTAL CONNECTED	1.7	5.1	3.8					2.7	3.4	4.7	SUB-TOTAL CONNECTED		

*PROVIDE GFCI BREAKER

SUB-TOTAL CONNECTED KVA AØ = 4.4
SUB-TOTAL CONNECTED KVA BØ = 8.5
SUB-TOTAL CONNECTED KVA CØ = 8.5
TOTAL CONNECTED KVA = 21.4

PANELBOARD SCHEDULE

NO. PP1 LOCATION: CONTROL ROOM

277/480 V, 3 PH, 4 W, 100 A MAINS — 100 A SOLID NEUTRAL — – A MCB

10,000 AIC AT 277 V — 100 A GROUND BUS — 100 A MLO — SURFACE MOUNTING

	CIRCUIT	DESCRIPTION OF LOAD	LOAD (KVA) AØ	BØ	CØ	BREAKER TRIP	POLE	BREAKER POLE	TRIP	LOAD (KVA) AØ	BØ	CØ	DESCRIPTION OF LOAD	CIRCUIT	
	1	GROUND LEVEL UNIT HEATER EUH-1A	1.7			20	3	3	20	1.7			BASEMENT LEVEL UNIT HEATER EUH-1E	2	*
				1.7							1.7				
					1.7							1.7			
	3	GROUND LEVEL UNIT HEATER EUH-1B	1.7			20	3	3	20	1.7			BASEMENT LEVEL UNIT HEATER EUH-1F	4	*
				1.7							1.7				
					1.7							1.7			
*	5	MEZZ. LEVEL UNIT HEATER EUH-1C	1.7			20	3	3	20	0.3			SLUICE GATE SG-4	6	
				1.7							0.3				
					1.7							0.3			
*	7	MEZZ. LEVEL UNIT HEATER EUH-1D	1.7			20	3	3	20	0.3			SLUICE GATE SG-5	8	
				1.7							0.3				
					1.7							0.3			
	9	SLUICE GATE SG-1	0.3			20	3	3	20	0.6			HOIST CRANE GROUND FLOOR	10	
				0.3							0.6				
					0.3							0.6			
	11	SLUICE GATE SG-2	0.3			20	3	3	20	0.6			HOIST CRANE BASEMENT	12	*
				0.3							0.6				
					0.3							0.6			
	13	SLUICE GATE SG-3	0.3			20	3	2	20	1.5			ELECTRIC WATER HEATER EWH-1	14	
				0.3							1.5				
					0.3							–	SPACE		
	15	SUMP PUMP CONTROL PANEL	0.6			20	3	–	–	–			SPACE		
				0.6							–				
					0.6							–			
		SUB-TOTAL CONNECTED	8.3	8.3	8.3					6.7	6.7	5.2	SUB-TOTAL CONNECTED		

*PROVIDE GFCI BREAKER

SUB-TOTAL CONNECTED KVA AØ = 15.0
SUB-TOTAL CONNECTED KVA BØ = 15.0
SUB-TOTAL CONNECTED KVA CØ = 13.5
TOTAL CONNECTED KVA = 43.5

PREPARED BY

BETA
www.BETA-Inc.com

REGISTERED PROFESSIONAL

COMMONWEALTH OF MASSACHUSETTS
MICHAEL J. COTTER
ELECTRICAL
No. 40999
REGISTERED PROFESSIONAL ENGINEER

SUBCONSULTANT

S&R ENGINEERING, INC.

Mechanical/Electrical Engineers
150 Grossman Drive, Suite 309
Braintree, Massachusetts 02184
617 221-9220
web: www.sar.com

PROJECT

MAIN LIFT

PUMP STATION

TAUNTON, MA

TITLE

ELECTRICAL SCHEDULES

NO.	REVISIONS	DATE

DRAWN BY: RB
DESIGNED BY: MC
CHECKED BY: MC
ISSUE DATE: 03/31/22
BETA JOB NO.: 5530-000

SCALE

UNLESS OTHERWISE NOTED OR CHANGED BY REPRODUCTION

For Review Only

SHEET NO. E-11

3/29/2022 8:00 AM W:\YEAR - 2017\17003.00 - TAUNTON MAIN LIFT PUMP STATION\ELECTRICAL DEPARTMENT\17003.00 ELEC.DWG

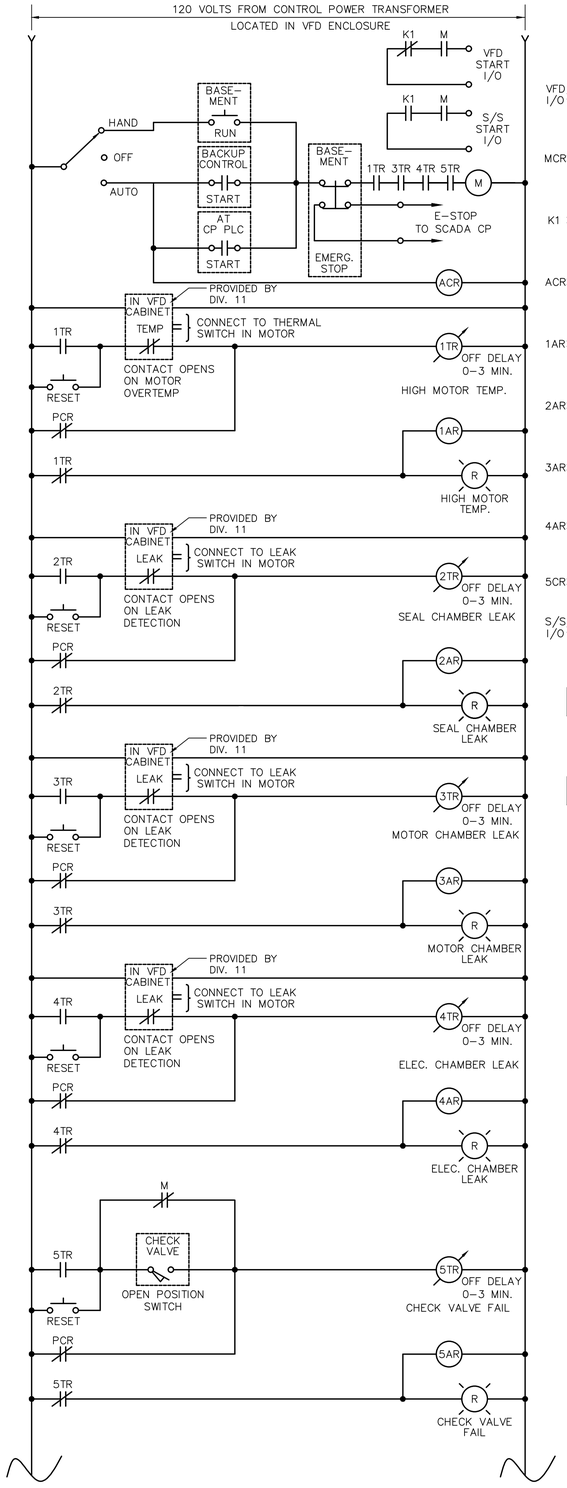

CONTROL WIRING DIAGRAM
DRY PIT SUBMERSIBLE PUMPS

NOT TO SCALE

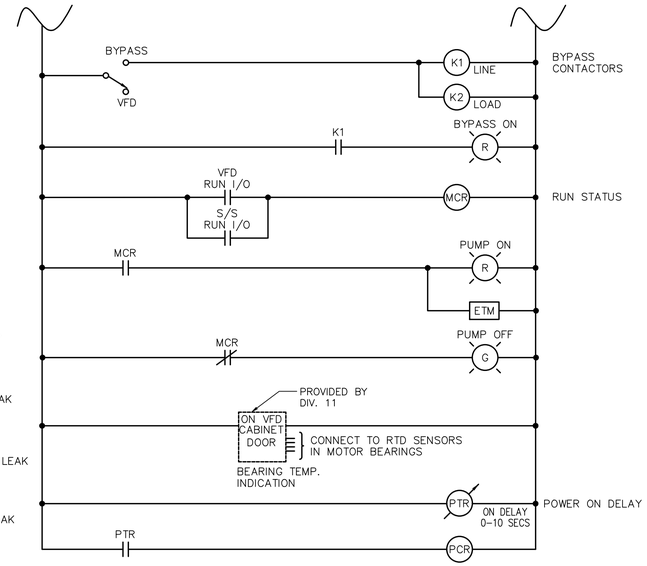

CONTROL WIRING DIAGRAM
DRY PIT SUBMERSIBLE PUMPS - CONT.

NOT TO SCALE

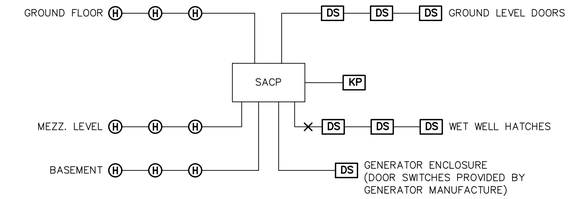

SECURITY NOTES:

1. RISER DIAGRAM ONLY REPRESENTS TYPE OF DEVICES AND DOES NOT REPRESENT ACTUAL QUANTITIES. REFER TO PLAN DRAWINGS QUANTITIES AND LOCATIONS OF DEVICES.
2. MINIMUM SIZE CONDUIT SHALL BE 3/4" UNLESS NOTED OTHERWISE.
3. SYSTEM CONDUIT/CABLING SHALL BE INSTALLED IN ACCORDANCE WITH EQUIPMENT SUPPLIERS APPROVED SHOP DRAWINGS AND WIRING DIAGRAMS.

SECURITY SYSTEM RISER

NOT TO SCALE

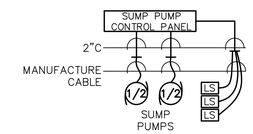

SUMP PUMP BLOCK WIRING DIAGRAM

NOT TO SCALE

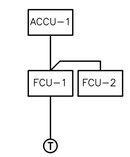

ACCU-1 BLOCK WIRING DIAGRAM

NOT TO SCALE

NOTES:

1. PROVIDE INTERCONNECTING 3/4"C WITH #16 SHIELDED PAIR CONTROL CABLING BETWEEN ALL EQUIPMENT AND DEVICES

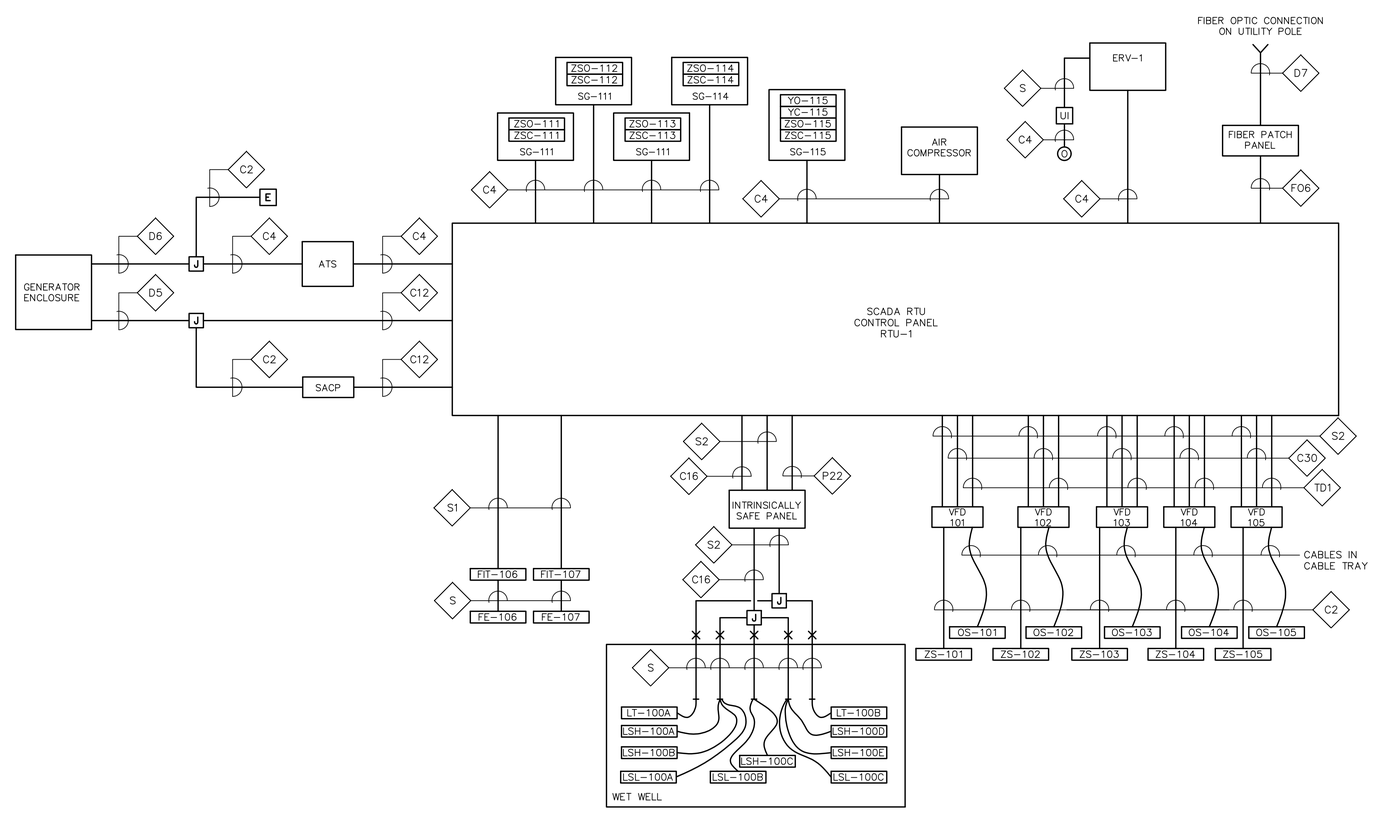

CONTROL BLOCK WIRING DIAGRAM

NOT TO SCALE

CONTROL WIRING DIAGRAM
DRY PIT SUBMERSIBLE PUMPS

NOT TO SCALE

PREPARED BY

BETA
www.BETA-Inc.com

REGISTERED PROFESSIONAL

COMMONWEALTH OF MASSACHUSETTS
MICHAEL J. COTTER
ELECTRICAL
No. 40999
REGISTERED PROFESSIONAL ENGINEER

SUBCONSULTANT

S&R ENGINEERING, INC.

Mechanical/Electrical Engineers
150 Grossman Drive, Suite 309
Braintree, Massachusetts 02184
617 221-9220
web: www.sar.com

PROJECT

MAIN LIFT

PUMP STATION

TAUNTON, MA

TITLE

ELECTRICAL WIRING DIAGRAMS

NO.	REVISIONS	DATE

DRAWN BY:	RB
DESIGNED BY:	MC
CHECKED BY:	MC
ISSUE DATE:	03/31/22
BETA JOB NO.:	5530-000

SCALE

UNLESS OTHERWISE NOTED OR CHANGED BY REPRODUCTION

For Review Only

SHEET NO. E-12

1/19/2022 1:36 PM W:\YEAR - 2017\17003.00 - TAUNTON MAIN LIFT PUMP STATION\ELECTRICAL DEPARTMENT\17003.00 ELEC.DWG

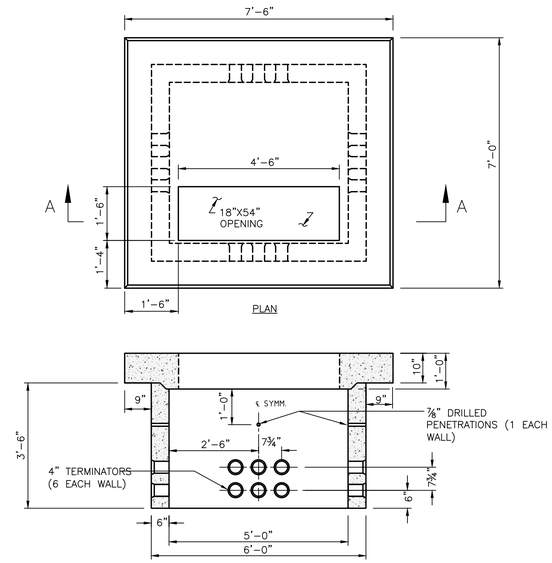

NOTES:

1. CONCRETE: 5,000 PSI MINIMUM AFTER 28 DAYS.
2. DESIGN LOADING: AASHTO HS20-44, 0 TO 5 FEET COVER.
3. DESIGN SPECIFICATIONS – ACI 318 & AASHTO LOAD FACTOR DESIGN METHOD.
4. STEEL REINFORCEMENT CONFORMS TO ASTM A615, GRADE 60. MINIMUM STEEL COVER 1½".
5. ALL TERMINATORS SHALL HAVE BELL ENDS FLUSH WITH THE INSIDE WALL.

TRANSFORMER PAD

NO SCALE

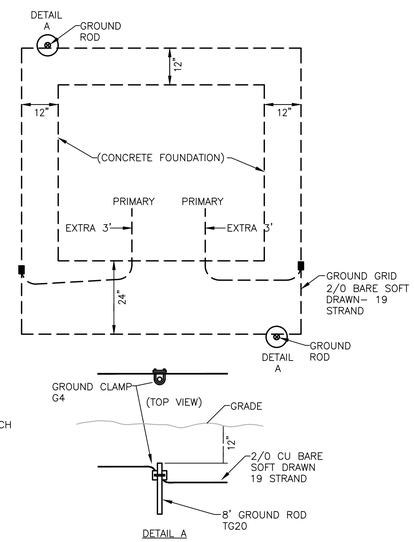

PAD MOUNTED TRANSFORMER GROUNDING PLAN

NO SCALE

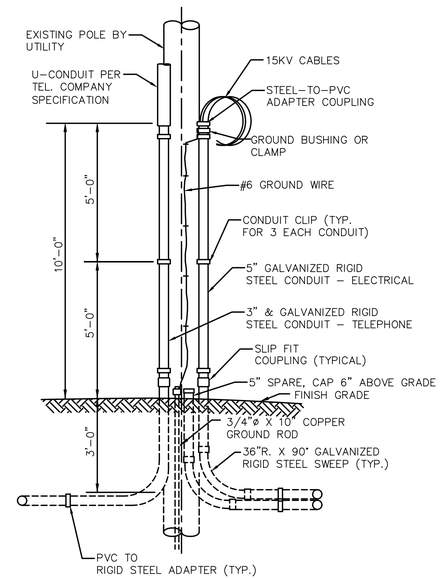

UTILITY POLE SERVICE RISER DETAIL

NOT TO SCALE

DUCT / CABLE SCHEDULE

DUCT NO.	SIZE	CONDUCTORS	FROM	TO
D1	4"	(3) #1/0 AL 15KV CABLE	UTILITY POLE	UTILITY TRANSFORMER
D2	4"	(4) 500kcmiL	UTILITY TRANSFOMER	MCB
D3	4"	(4) 500kcmiL, #2/0 GND	GENERATOR	GENERATOR DISCONNECT SWITCH
D4	1"	(4) #12, #12GND, (2) #10, #10GND	LP-1	GENERATOR AUXILLARY SYSTEMS.
D5	1"	(20) #14	GENERATOR	SCADA RTU CONTROL PANEL & SECURITY CONTROL PANEL
D6	1"	(6) #14	GENERATOR	ATS & EMERGENCY STOP
D7	3"	12 STRAND FIBER OPTIC CABLE	UTILITY POLE	SCADA RTU CONTROL PANEL
D8	4"	(4) 600kcmiL	EXISTING UTILITY TRANSFOMER	MCC-1A MCB

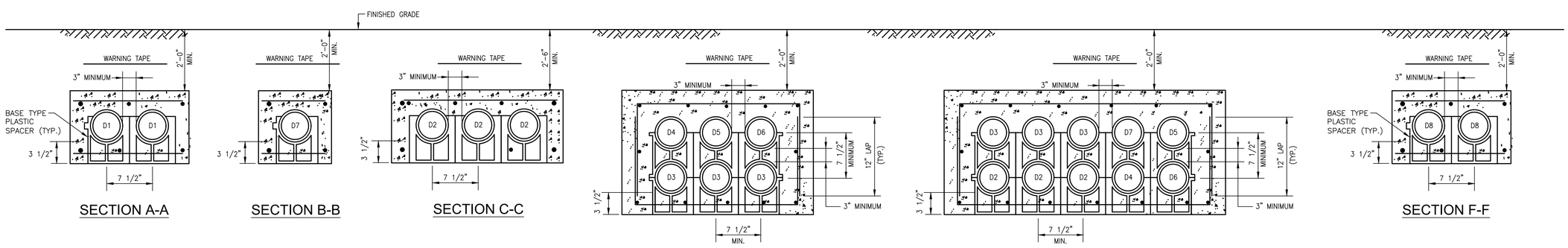

NOTES:

1. BACKFILL DUCT BANK IN LAYERS AND MANUALLY TAMP OR "PUDDLE" CONCRETE FILL. PROVIDE RED DUCT BANK MARKER TAPES, READING "CAUTION – ELECTRICAL LINES BELOW", OVER ENTIRE LENGTH OF DUCTLINE. LOCATE TAPES 12 INCHES BELOW GRADE. PROVIDE A TAPE FOR EVERY 12 INCHES OF WIDTH OF DUCTLINE.
2. A MINIMUM OF 12" SEPARATION SHALL BE KEPT BETWEEN DUCT BANK SECTIONS WITHIN SAME TRENCH.
3. A MINIMUM 3" OF CONCRETE SHALL KEPT BETWEEN CONDUITS AND THE PERIMETER OF ALL DUCTBANKS.

DUCTBANK SECTIONS

NO SCALE

PREPARED BY

BETA
www.BETA-Inc.com

REGISTERED PROFESSIONAL

COMMONWEALTH OF MASSACHUSETTS
MICHAEL J. COTTER
ELECTRICAL
No. 40999
REGISTERED PROFESSIONAL ENGINEER

SUBCONSULTANT

SAR ENGINEERING, INC.

Mechanical/Electrical Engineers
150 Grossman Drive, Suite 309
Braintree, Massachusetts 02184
617 221-9220
web: www.sar.com

PROJECT

MAIN LIFT

PUMP STATION

TAUNTON, MA

TITLE

ELECTRICAL
SITE
DETAILS

NO.	REVISIONS	DATE

DRAWN BY:	RB
DESIGNED BY:	MC
CHECKED BY:	MC
ISSUE DATE:	03/31/22
BETA JOB NO.:	5530-000

SCALE

UNLESS OTHERWISE NOTED OR CHANGED BY REPRODUCTION

For Review Only

SHEET NO.

E-13

1/19/2022 1:36 PM W:\YEAR - 2017\17003.00 - TAUNTON MAIN LIFT PUMP STATION\ELECTRICAL\DEPARTMENT\17003.00 ELEC.DWG

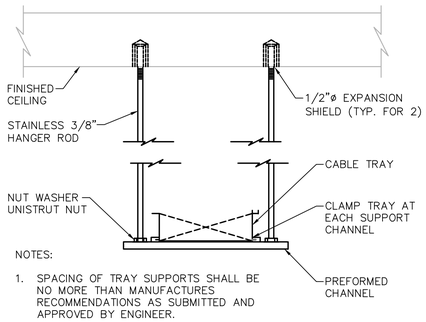

NOTES:

1. SPACING OF TRAY SUPPORTS SHALL BE NO MORE THAN MANUFACTURES RECOMMENDATIONS AS SUBMITTED AND APPROVED BY ENGINEER.

TYPICAL CABLE TRAY HANGER

NOT TO SCALE

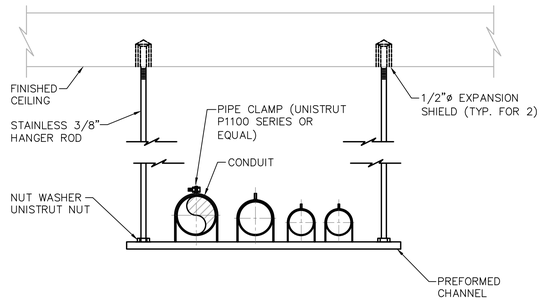

TYPICAL CABLE TRAY HANGER

NOT TO SCALE

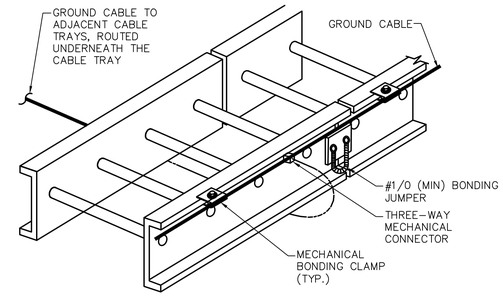

GROUNDING EACH CABLE TRAY SECTION

NOT TO SCALE

GENERAL NOTES:

1. ALL MOUNTING BRACKETS, SUPPORTS, FASTENERS, AND ECT. WITHIN THE WET WELL SHALL BE STAINLESS STEEL.

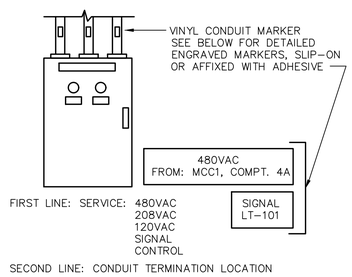

CONDUIT MARKER DETAIL

NOT TO SCALE

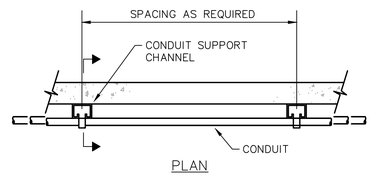

PLAN

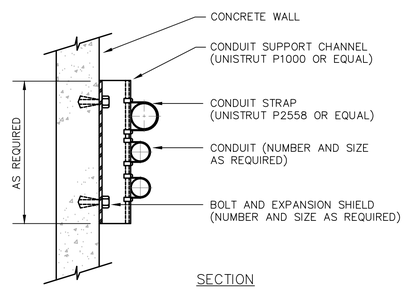

SECTION

TYPICAL CONDUIT WALL SUPPORT

NOT TO SCALE

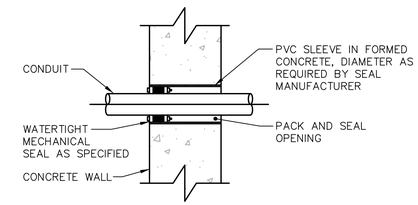

CONDUIT PENETRATION THROUGH CONCRETE WALL

NOT TO SCALE

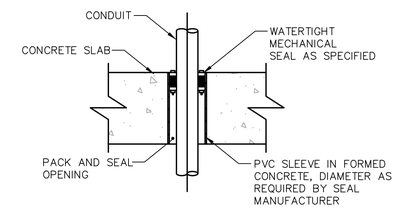

CONDUIT PENETRATION PASSING THROUGH CONCRETE SLAB

NOT TO SCALE

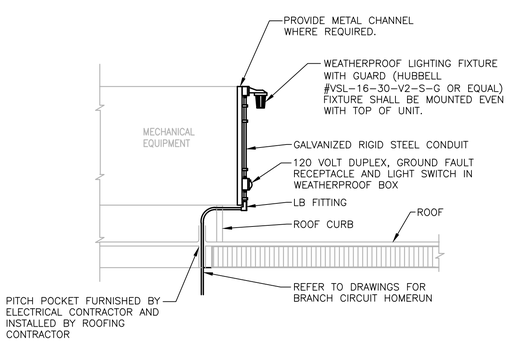

ROOFTOP LIGHT AND RECEPTACLE DETAIL

NOT TO SCALE

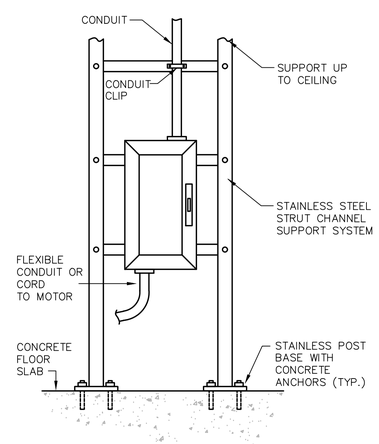

ELECTRICAL EQUIPMENT STANCHION MOUNTING DETAIL

NOT TO SCALE

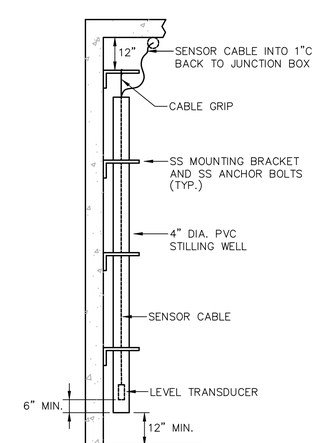

SUBMERSIBLE LEVEL TRANSDUCER IN WET WELL

NOT TO SCALE

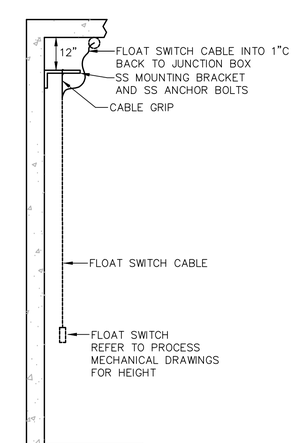

FLOAT LEVEL SWITCH IN WET WELL

NOT TO SCALE

PREPARED BY

BETA
www.BETA-Inc.com

REGISTERED PROFESSIONAL

COMMONWEALTH OF MASSACHUSETTS
MICHAEL J. COTTER
ELECTRICAL
No. 40999
REGISTERED PROFESSIONAL ENGINEER

SUBCONSULTANT

S-A-R ENGINEERING, INC.

Mechanical/Electrical Engineers
150 Grossman Drive, Suite 309
Braintree, Massachusetts 02184
617 221-9220
web: www.sar.com

PROJECT

MAIN LIFT

PUMP STATION

TAUNTON, MA

TITLE

ELECTRICAL DETAILS

NO.	REVISIONS	DATE

DRAWN BY: RB

DESIGNED BY: MC

CHECKED BY: MC

ISSUE DATE: 03/31/22

BETA JOB NO.: 5530-000

SCALE

UNLESS OTHERWISE NOTED OR CHANGED BY REPRODUCTION

For Review Only

SHEET NO. E-14

1/19/2022 1:36 PM W:\YEAR - 2017\17003.00 - TAUNTON MAIN LIFT PUMP STATION\ELECTRICAL DEPARTMENT\17003.00 ELEC.DWG