City of Taunton, Massachusetts

Wastewater Treatment Facility Improvements
Phase II

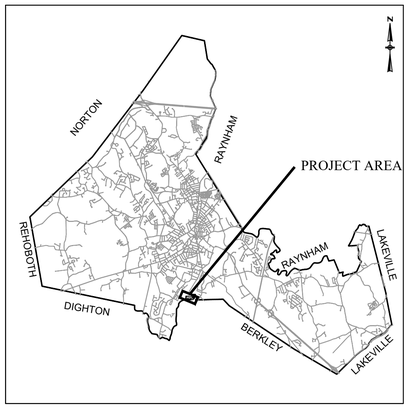

LOCATION MAP
NOT TO SCALE

PROJECT LOCATION

LOCUS MAP
NOT TO SCALE

Mayor
Shaunna O'Connell

Department of Public Works
Frederic J. Cornaglia - Commissioner
Anthony Abreau - Assistant Commissioner

City Engineer
Michael Patneaude, P.E.

City Council
Phillip Duarte
Estele Borges
Chris Coute
Kelly A. Dooner
John M. McCaul
Jeff Postell
David W. Pottier
Lawrence J. Quintal
Barry Sanders

ISSUED FOR CONSTRUCTION

Prepared By:
BETA
www.BETA-Inc.com

Contract S-2022-1
CWSRF No. 6760

Issue Date:
March 31, 2022

INDEX OF DRAWINGS

GENERAL

G-1.1 – SHEET INDEX
G-1.2 – CIVIL & PROCESS FLOW DRAWINGS LEGEND, ABBREVIATIONS & SYMBOLS
G-1.3 – GENERAL CIVIL NOTES
G-1.4 – WWTF PROCESS AREAS KEY PLAN
G-1.5 – RECOMMENDED SEQUENCE OF CONSTRUCTION PLAN
G-2.1 – PROPOSED FACILITIES HYDRAULIC PROFILE
G-2.2 – PROCESS FLOW DIAGRAM BIOLOGICAL TREATMENT REACTOR
G-2.3 – PROCESS FLOW DIAGRAM SUPPLEMENTAL CARBON FEED SYSTEM
G-2.4 – PROCESS FLOW DIAGRAM AERATION BLOWERS
G-2.5 – PROCESS FLOW DIAGRAM FINAL CLARIFIERS NO.1 & 2
G-2.6 – PROCESS FLOW DIAGRAM FINAL CLARIFIERS NO.3 & 4

CIVIL

C-1.1 – WWTF EXISTING SITE PLAN
C-1.2 – WWTF BORING LOCATION PLAN
C-1.3 – WWTF EXISTING YARD PIPING
C-1.4 – WWTF PROPOSED SITE PLAN
C-1.5 – WWTF SITE PREPARATION & DEMOLITION PLAN
C-1.6 – WWTF PAVING SITE PLAN
C-1.7 – WWTF PAVEMENT STRIPING PLAN
C-1.8 – YARD PIPING PLAN INDEX
C-1.9 – YARD PIPING PLAN I
C-1.10 – YARD PIPING PLAN II
C-1.11 – YARD PIPING PLAN III
C-1.12 – YARD PIPING PLAN IV
C-1.13 – YARD PIPING PLAN V
C-1.14 – YARD PIPING PLAN VI
C-1.15 – YARD PIPING PLAN VII
C-1.16 – YARD PIPING PLAN VIII
C-1.17 – SLUDGE LANDFILL DRAINAGE SITE PLAN
C-1.18 – SLUDGE LANDFILL DETAILS & NOTES
CD-1 – CIVIL DETAILS I
CD-2 – CIVIL DETAILS II
CD-3 – CIVIL DETAILS III
CD-4 – CIVIL DETAILS IV

STRUCTURAL

SG-1 – STRUCTURAL NOTES (1 OF 2)
SG-2 – STRUCTURAL NOTES (2 OF 2)
SG-3 – CONCRETE REPAIR DETAILS
SG-4 – MISCELLANEOUS DETAILS (1 OF 2)
SG-5 – MISCELLANEOUS DETAILS (2 OF 2)
SG-6 – PHASE 2 SITE PLAN
S-3.1 – SECONDARY ANOXIC TANK #1 & #2 PLAN
S-3.2 – SECONDARY ANOXIC TANK #1 & #2 SECTIONS & DETAILS
S-3.3 – FINAL CLARIFIER FLOW DISTRIBUTION STRUCTURE
S-3.4 – FLOW DISTRIBUTION STRUCTURE GRATING DETAILS
S-3.5 – BIOLOGICAL TREATMENT TANK PLAN
S-3.6 – BIOLOGICAL TREATMENT TANK SECTIONS AND DETAILS (1 OF 2)
S-3.7 – BIOLOGICAL TREATMENT TANK SECTIONS AND DETAILS (2 OF 2)
S-3.8 – BIOLOGICAL TREATMENT TANK WALKWAYS
S-3.9 – MICRO-C TANK
S-3.10 – RE-AERATION TANK
S-4.1 – FINAL CLARIFIERS SECTIONS & DETAILS
S-7.1 – SOLIDS HANDLING BUILDING HOIST FRAMING & DETAILS

MECHANICAL

M-0.1 – MECHANICAL SCHEDULE
M-3.1 – AERATION TANKS NO.1, 2 & 3 DEMOLITION PLANS & SECTIONS
M-3.2 – BIOLOGICAL TREATMENT REACTOR PLAN & SECTIONS I
M-3.3 – BIOLOGICAL TREATMENT REACTOR PLAN & SECTIONS II
M-3.4 – SECONDARY ANOXIC & RE-AERATION TANKS NO.1 & 2 PLANS
M-3.5 – SECONDARY ANOXIC & RE-AERATION TANKS NO.1 & 2 SECTIONS
M-3.6 – BIOLOGICAL TREATMENT DETAILS I
M-3.7 – BIOLOGICAL TREATMENT DETAILS II
M-3.8 – FINAL CLARIFIER FLOW DISTRIBUTION STRUCTURE PLANS & SECTIONS
M-4.1 – FINAL CLARIFIERS NO.1 & 2 DEMOLITION PLAN & SECTION
M-4.2 – FINAL CLARIFIERS NO.1 & 2 PLAN & SECTION
M-4.3 – SECONDARY SLUDGE PUMP STATION NO.1 DEMOLITION PLAN & SECTION
M-4.4 – SECONDARY SLUDGE PUMP STATION NO.1 DEMOLITION SECTIONS
M-4.5 – SECONDARY SLUDGE PUMP STATION NO.1 PLAN & SECTION
M-4.6 – SECONDARY SLUDGE PUMP STATION NO.1 SECTIONS
M-4.7 – FINAL CLARIFIERS NO.3 & 4 DEMOLITION PLAN & SECTION
M-4.8 – FINAL CLARIFIERS NO.3 & 4 PLAN & SECTION
M-4.9 – SECONDARY SLUDGE PUMP STATION NO.2 DEMOLITION PLAN & SECTION
M-4.10 – SECONDARY SLUDGE PUMP STATION NO.2 DEMOLITION SECTIONS
M-4.11 – SECONDARY SLUDGE PUMP STATION NO.2 PLAN & SECTION
M-4.12 – SECONDARY SLUDGE PUMP STATION NO.2 SECTIONS
M-4.13 – FINAL CLARIFIER DETAILS
M-6.1 – BLOWER BUILDING PLANS & SECTIONS
M-9.1 – EXISTING BLOWER BUILDING DEMOLITION PLAN & SECTION
MD-1 – MECHANICAL DETAILS I
MD-2 – MECHANICAL DETAILS II
MD-3 – MECHANICAL DETAILS III

HVAC

H-0.1 – HVAC LEGEND & GENERAL NOTES
H-0.2 – HVAC SCHEDULES
H-0.3 – HVAC DETAILS
H-0.4 – HVAC DETAILS
H-0.5 – HVAC SOLIDS HANDING FUEL OIL DETAILS
H-0.6 – HVAC ADMIN. BUILDING FUEL OIL DETAILS
H-0.7 – HVAC CONTROLS SCHEMATICS
H-0.8 – HVAC SITE PLAN
H-4.1 – HVAC DEMOLITION FINAL CLARIFIERS NO.1 & 2 PLAN & SLUDGE PUMP STATION NO.1 PLAN
H-4.2 – HVAC FINAL CLARIFIERS NO.1 & 2 PLAN & SLUDGE PUMP STATION NO.1 PLAN
H-4.3 – HVAC DEMOLITION FINAL CLARIFIERS NO.3 & 4 PLAN & SLUDGE PUMP STATION NO.2 PLAN
H-4.4 – HVAC FINAL CLARIFIERS NO.3 & 4 PLAN & SLUDGE PUMP STATION NO.2 PLAN
H-7.1 – HVAC NEW WORK SOLIDS HANDLING BUILDING BOILER ROOM PART PLAN
H-9.1 – HVAC ADMINISTRATION BUILDING FUEL OIL PLAN
H-9.2 – HVAC DEMOLITION STORAGE BUILDING PLAN
H-9.3 – HVAC STORAGE BUILDING PLAN
H-9.4 – HVAC STORAGE BUILDING ROOF PLAN

PLUMBING

P-0.1 – PLUMBING LEGEND & GENERAL NOTES
P-0.2 – PLUMBING SCHEDULES
P-0.3 – PLUMBING DETAILS
P-4.1 – PLUMBING DEMOLITION FINAL CLARIFIERS NO.1 & 2 PLAN & SLUDGE PUMP STATION NO.1 PLAN
P-4.2 – PLUMBING FINAL CLARIFIERS NO.1 & 2 PLAN & SLUDGE PUMP STATION NO.1 PLAN
P-4.3 – PLUMBING DEMOLITION FINAL CLARIFIERS NO.3 & 4 PLAN & SLUDGE PUMP STATION NO.2 PLAN
P-4.4 – PLUMBING FINAL CLARIFIERS NO.3 & 4 PLAN & SLUDGE PUMP STATION NO.2 PLAN
P-9.1 – PLUMBING DEMOLITION STORAGE BUILDING PLAN
P-9.2 – PLUMBING STORAGE BUILDING PLAN
H-9.3 – PLUMBING STORAGE BUILDING ROOF PLAN

INSTRUMENTATION & CONTROLS

I-0.1 – INSTRUMENTATION & CONTROLS LEGEND AND NOTES
I-0.2 – INSTRUMENTATION & CONTROLS HEADWORKS
I-0.3 – INSTRUMENTATION & CONTROLS PRIMARY CLARIFIERS
I-0.4 – INSTRUMENTATION & CONTROLS PRIMARY SLUDGE PUMPS
I-0.5 – INSTRUMENTATION & CONTROLS BIOLOGICAL TREATMENT TRAIN #1
I-0.6 – INSTRUMENTATION & CONTROLS BIOLOGICAL TREATMENT TRAIN #1
I-0.7 – INSTRUMENTATION & CONTROLS BIOLOGICAL TREATMENT TRAIN #2
I-0.8 – INSTRUMENTATION & CONTROLS BIOLOGICAL TREATMENT TRAIN #2
I-0.9 – INSTRUMENTATION & CONTROLS SECONDARY ANOXIC TANKS
I-0.10 – INSTRUMENTATION & CONTROLS RE-AERATION TANKS
I-0.11 – INSTRUMENTATION & CONTROLS FINAL CLARIFIERS #1 & #2
I-0.12 – INSTRUMENTATION & CONTROLS FINAL CLARIFIERS #3 & #4
I-0.13 – INSTRUMENTATION & CONTROLS DISINFECTION
I-0.14 – INSTRUMENTATION & CONTROLS SLUDGE THICKENING
I-0.15 – INSTRUMENTATION & CONTROLS DEWATERING
I-0.16 – INSTRUMENTATION & CONTROLS LIME SYSTEM
I-0.17 – INSTRUMENTATION & CONTROLS SODIUM HYPOCHLORITE & SODIUM BISULFITE SYSTEMS
I-0.18 – INSTRUMENTATION & CONTROLS POLYMER SYSTEM
I-0.19 – INSTRUMENTATION & CONTROLS AERATION BLOWERS
I-0.20 – INSTRUMENTATION & CONTROLS MICRO C SYSTEM
I-0.21 – INSTRUMENTATION & CONTROLS PLANT WATER
I-0.22 – INSTRUMENTATION & CONTROLS HVAC & PLUMBING SYSTEMS
I-0.23 – INSTRUMENTATION & CONTROLS HVAC & PLUMBING SYSTEMS

ELECTRICAL

E-0.1 – ELECTRICAL LEGEND & GENERAL NOTES
E-0.2 – ELECTRICAL SITE PLAN
E-0.3 – ELECTRICAL SLUDGE PUMP STATIONS #1 & #2 ONE LINE DIAGRAM DEMOLITION
E-0.4 – ELECTRICAL EXISTING BLOWER BUILDING ONE LINE DIAGRAM DEMOLITION
E-0.5 – ELECTRICAL NEW BLOWER BUILDING ONE LINE DIAGRAM
E-0.6 – ELECTRICAL SLUDGE PUMP STATIONS #1 & #2 ONE LINE DIAGRAM
E-0.7 – ELECTRICAL STORAGE BUILDING ONE LINE DIAGRAM
E-0.8 – ELECTRICAL PANELBOARD SCHEDULES
E-0.9 – ELECTRICAL LIGHTING, & CABLE/CONDUIT SCHEDULES
E-0.10 – ELECTRICAL CONTROL BLOCK WIRING DIAGRAMS
E-0.11 – ELECTRICAL SCADA PANEL INTERCONNECTION DIAGRAM
E-0.12 – ELECTRICAL SCADA PANEL INTERCONNECTION DIAGRAM
E-0.13 – ELECTRICAL MOTOR CONTROL WIRING DIAGRAMS
E-0.14 – ELECTRICAL MOTOR CONTROL WIRING DIAGRAMS
E-0.15 – ELECTRICAL MOTOR CONTROL WIRING DIAGRAMS
E-0.16 – ELECTRICAL DUCTBANK SECTIONS
E-0.17 – ELECTRICAL DETAILS & EXISTING DUCTBANK SECTIONS
E-3.1 – ELECTRICAL DEMOLITION AERATION TANKS NO. 1, 2, & 3 PLAN
E-3.2 – ELECTRICAL SECONDARY ANOXIC & RE-AERATION TANKS NO.1 & 2 PLANS
E-3.3 – ELECTRICAL BIOLOGICAL TREATMENT REACTOR PART PLAN I
E-3.4 – ELECTRICAL BIOLOGICAL TREATMENT REACTOR PART PLAN II
E-4.1 – ELECTRICAL DEMOLITION FINAL CLARIFIERS NO.1 & 2 PLAN & SLUDGE PUMP STATION NO.1 PLAN
E-4.2 – ELECTRICAL FINAL CLARIFIERS NO.1 & 2 PLAN & SLUDGE PUMP STATION NO.1 POWER PLAN
E-4.3 – ELECTRICAL FINAL CLARIFIERS NO.1 & 2 PLAN & SLUDGE PUMP STATION NO.1 LIGHTING PLAN
E-4.4 – ELECTRICAL FINAL CLARIFIERS NO.1 & 2 PLAN & SLUDGE PUMP STATION NO.1 FIRE ALARM PLAN
E-4.5 – ELECTRICAL DEMOLITION FINAL CLARIFIERS NO.3 & 4 PLAN & SLUDGE PUMP STATION NO.2 PLAN
E-4.6 – ELECTRICAL FINAL CLARIFIERS NO.3 & 4 PLAN & SLUDGE PUMP STATION NO.2 POWER PLAN
E-4.7 – ELECTRICAL FINAL CLARIFIERS NO.3 & 4 PLAN & SLUDGE PUMP STATION NO.2 LIGHTING PLAN
E-4.8 – ELECTRICAL FINAL CLARIFIERS NO.3 & 4 PLAN & SLUDGE PUMP STATION NO.2 FIRE ALARM PLAN
E-6.1 – ELECTRICAL BLOWER BUILDING POWER PLAN
E-7.1 – ELECTRICAL SOLIDS HANDLING BUILDING FIRST FLOOR PART PLAN
E-9.1 – ELECTRICAL CONTROL & ADMIN. BUILDING BASEMENT POWER PLAN
E-9.2 – ELECTRICAL CONTROL & ADMIN. BUILDING FIRST FLOOR POWER PLAN
E-9.3 – ELECTRICAL DEMOLITION EXISTING BLOWER BUILDING PLAN
E-9.4 – ELECTRICAL STORAGE BUILDING POWER PLAN
E-9.5 – ELECTRICAL STORAGE BUILDING POWER ROOF PLAN
E-9.6 – ELECTRICAL STORAGE BUILDING LIGHTING PLAN
E-9.7 – ELECTRICAL STORAGE BUILDING FIRE ALARM PLAN

PREPARED BY

BETA
www.BETA-Inc.com

REGISTERED PROFESSIONAL

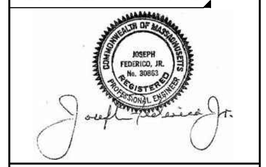

SUBCONSULTANT

PROJECT

Taunton Wastewater Treatment Facility Improvements Phase 2

Taunton, MA

TITLE

Sheet Index

NO.	REVISIONS	DATE

DRAWN BY:	BM
DESIGNED BY:	BM
CHECKED BY:	SR
ISSUE DATE:	3/31/2022
BETA JOB NO.:	6050

SCALE

NONE

UNLESS OTHERWISE NOTED OR CHANGED BY REPRODUCTION

SHEET NO.

G-1.1

3/31/2022 9:56 AM J:\TAUNTON\WWTF DESIGN\AUTOCAD\PLAN SET\PHASE 2\DRAWING INDEX, LEGEND & GENERAL NOTES.DWG (BETA STD BW.CTB)

CIVIL DRAWINGS LEGEND

GENERAL SYMBOLS

EXISTING	PROPOSED	
	VCC	CURB OR BERM (TYPE AS NOTED)
EOP	EOP	EDGE OF PAVEMENT
CB		CATCH BASIN (OR GUTTER INLET, LEACHING BASIN, DROP INLET, CATCH BASIN CURB INLET)
EH		ELECTRIC HANDHOLE
E		ELECTRIC MANHOLE
S		SEWER MANHOLE
D		DRAINAGE MANHOLE
GG		GAS GATE
WG	WG	WATER GATE
CS	CS	CURB STOP
HYD.	HYD.	HYDRANT
LP		STREET LIGHT POLE
UP	UP	UTILITY POLE
		SIGN
12" D	12" D	DRAIN PIPE (SIZE AS NOTED)
8" S		SEWER MAIN (SIZE AS NOTED)
E	E E	ELECTRIC DUCT
E		ELECTRIC DUCT – PHASE 1
4" G		GAS MAIN (SIZE AS NOTED)
8" W	8" W	WATER MAIN (SIZE AS NOTED)
EOH	EOH	OVERHEAD WIRE
		RETAINING WALL (TYPE NOTED)
PL		PROPERTY LINE
		EASEMENT LINE (TYPE NOTED)
X		HEDGE/SHRUBS
X X X	X X X	FENCE (SIZE AND TYPE AS NOTED)
WF–1		EDGE OF WETLAND W/ FLAGGED NUMBER
		EDGE OF RIVER/STREAM LINE
		100–YR FLOOD
		100–FT. INLAND BANK BUFFER
		200–FT. RIVER FRONT AREA
		WOODED AREA / LIMIT OF CLEARING
x 00.0	x 00.00	SPOT GRADE
		SAW CUT LINE
	TP-1	TEST PIT
B–2	B-1	BORING
ECB	ECB	EROSION CONTROL BARRIER/COMPOST FILTER TUBES
5	5	CONTOUR – MAJOR
4	4	CONTOUR – MINOR

ABBREVIATIONS

GENERAL

ABAN.	ABANDON
ADJ.	ADJUST
ALT.	ALTERATION
APPROX.	APPROXIMATE
B	BASELINE
B.B.	BITUMINOUS BERM
B.C.	BITUMINOUS CURB
BD OR BND	BOUND
BLDG	BUILDING
B.O.	BY OTHERS
CC	CONCRETE CURB
CEM	CEMENT
CLF	CHAIN LINK FENCE
CONC	CONCRETE
CONST.	CONSTRUCTION
CONT.	CONTINUOUS
DWY	DRIVEWAY
EOP	EDGE OF PAVEMENT
EL.	ELEVATION
ESMT.	EASEMENT
EXIST.	EXISTING
FDN.	FOUNDATION
GRAN.	GRANITE
GC	GRANITE CURB
HOR.	HORIZONTAL
IP	IRON PIPE
JCT	JUNCTION
LP	LOW POINT
O.C.	ON CENTER
PERM.	PERMANENT
PROP.	PROPOSED
PVMT.	PAVEMENT
R&D	REMOVE AND DISPOSE
R&R	REMOVE AND RESET
R&S	REMOVE AND STOCKPILE
REM.	REMOVE
REMOD.	REMODEL
RET.	RETAIN
RT.	RIGHT
SDWK	SIDEWALK
SHT.	SHEET
STA.	STATION
TEMP.	TEMPORARY
TOW	TOP OF WALL
TYP.	TYPICAL
VAR.	VARIABLE
VERT.	VERTICAL
VCC	VERTICAL CONCRETE CURB
WCR	WHEELCHAIR RAMP

UTILITIES

ACCMP	ASPHALT COATED CORRUGATED METAL PIPE
CAP	CORRUGATED ALUMINUM PIPE
CB	CATCH BASIN
CI	CAST IRON PIPE
CMP	CORRUGATED METAL PIPE
CPP	CORRUGATED PLASTIC PIPE
CS	CORRUGATED STEEL PIPE
DI	DUCTILE IRON PIPE
F&C	FRAME AND COVER
F&G	FRAME AND GRATE
FM	FORCE MAIN
GIP	GALVANIZED IRON PIPE
GG	GAS GATE
HDW	HEADWALL
HYD.	HYDRANT
INV.	INVERT ELEVATION
LP	LIGHT POLE
MH	MANHOLE
PVC	POLY–VINYL–CHLORIDE
PWW	PAVED WATER WAY
RCP	REINFORCED CONCRETE PIPE (CLASS III UNLESS NOTED)
SD	SUBDRAIN
SMH	SEWER MANHOLE
TSV&B	TAPPING SLEEVE, VALVE AND BOX
UP	UTILITY POLE
UPL	UTILITY POLE w/ LIGHT
UPT	UTILITY POLE w/ TRANSFORMER
VC	VITRIFIED CLAY
WI	WROUGHT IRON
WG	WATER GATE
WM	WATER METER/WATER MAIN

FLOW STREAM IDENTIFICATION

A	AIR
ATE	AERATION TANK EFFLUENT
BFA	BIOFILTER AIR
BTE	BIOLOGICAL TREATMENT EFFLUENT
CLS	CHLORINE SOLUTION
CW	CITY WATER
D	DRAIN
FCE	FINAL CLARIFIER EFFLUENT
FL	FILTRATE
FS	FOAM SPRAY
G	NATURAL GAS
HE	HEADWORKS EFFLUENT
IR	INTERNAL RECYCLE (BIOLOGICAL TREATMENT)
LS	LIME SLURRY
ML	MIXED LIQUOR
OF	OVERFLOW
PA	PROCESS AIR
PE	PRIMARY EFFLUENT
PI	PRIMARY INFLUENT
PMR	POLYMER
PS	PRIMARY SLUDGE
PW	PLANT WATER
RAS	RETURN ACTIVATED SLUDGE
SAXE	SECONDARY ANOXIC EFFLUENT
SB	SODIUM BISULFITE
SS	SANITARY SEWER
SFM	SEWER FORCE MAIN
SC	SCUM
SCR	SCREENINGS
SSE	SECONDARY STAGE AFFLUENT
SH	SODIUM HYPOCHLORITE
SHX	SODIUM HYDROXIDE
TS	THICKENED SLUDGE
TD	TANK DEWATERING
WAS	WASTE ACTIVATED SLUDGE

MECHANICAL EQUIPMENT

BL	BLOWER
BS	BAR SCREEN
CP	CONTROL PANEL
GC	GRIT CLASSIFIER
GP	GRIT PUMP
GSC	GRIT SCREW CONVEYOR
IP	IN–PLANT PUMP
LE	LEVEL ELEMENT
MIX	MIXER
P	PUMP
RSP	RETURN SLUDGE PUMP
SC	SCREENINGS CONVEYOR
SG	SLUICE GATE
SIL	SILENCER
SP	SEPTAGE PUMP
ST	STORAGE TANK
WSP	WASTE SLUDGE PUMP
UST	UNDERGROUND STORAGE TANK

PROCESS FLOW DIAGRAM SYMBOLS

VALVES, GATES & ACTUATORS*

BALL CHECK VALVE
BALL VALVE
BUTTERFLY VALVE
CHECK VALVE
DIAPHRAGM VALVE
END CAP
GATE VALVE
GLOBE VALVE
KNIFE GATE VALVE
MANUAL OPERATOR
MOTOR ACTUATOR
PINCH VALVE
PLUG VALVE
SLIDE GATE
SLUICE GATE
SOLENOID ACTUATOR
V–PORT BALL VALVE
BACK PRESSURE VALVE
PRESSURE RELIEF VALVE
PRESSURE VALVE
REDUCING REGULATOR W/ EXTERNAL PRESSURE TAP
VACUUM RELIEF VALVE
HYDRANT

MECHANICAL EQUIPMENT*

CENTRIFUGAL PUMP
SUBMERSIBLE PUMP
METERING PUMP
CENTRIFUGAL BLOWER
SUBMERSIBLE AXIAL FLOW PUMP
POSITIVE DISPLACEMENT BLOWER
MIXER/AERATOR

MISCELLANEOUS*

SAMPLE PORT
WEIR FLOW
MIXER
CALIBRATION COLUMN
PULSATION DAMPENER
SUBMERSIBLE MIXER
ANALOG ELEMENT WITH DESCRIPTION
STATIC MIXER
PRESSURE SWITCH
HOSE CONNECTION
DRAIN
TANK VENT
FLOW SIGHT TUBE
STRAINER
DIFFUSED AERATION
PRESSURE INDICATOR WITH DIAPHRAGM
REDUCING COUPLING
PRESSURE GAUGE
FLOAT TYPE LEVEL SENSOR
ELECTRONIC STROKE COUNTER
LIMIT SWITCH
LEVEL ELEMENT
ROTOMETER
PROCESS FLOW
FLOWMETER
FOAM SPRAY NOZZLE

*NOTE:
ALL EXISTING FLOW STREAMS, VALVES, GATES, ACTUATORS, AND EQUIPMENT SHOWN LIGHT ON DRAWINGS, ALL NEW FLOW STREAMS, VALVES, GATES, ACTUATORS, AND EQUIPMENT SHOWN DARK ON DRAWINGS.

PREPARED BY

BETA
www.BETA-Inc.com

REGISTERED PROFESSIONAL

COMMONWEALTH OF MASSACHUSETTS
JOSEPH FEDERICO, JR.
No. 30663
REGISTERED PROFESSIONAL ENGINEER

SUBCONSULTANT

PROJECT

Taunton Wastewater Treatment Facility Improvements Phase 2

Taunton, MA

TITLE

Civil & Process Flow Drawings Legend, Abbreviations & Symbols

NO.	REVISIONS	DATE

DRAWN BY:	BM
DESIGNED BY:	BM
CHECKED BY:	SR
ISSUE DATE:	3/31/2022
BETA JOB NO.:	6050

SCALE

NONE

UNLESS OTHERWISE NOTED OR CHANGED BY REPRODUCTION

SHEET NO.

G-1.2

3/31/2022 9:57 AM J:\TAUNTON\WWTF DESIGN\AUTOCAD\PLAN SET\PHASE 2\DRAWING INDEX, LEGEND & GENERAL NOTES.DWG (BETA STD BW.CTB)

GENERAL CIVIL NOTES

1. SURVEY INFORMATION:

   –TOPOGRAPHIC SURVEY COMPLETED BY LIGHTHOUSE LAND SURVEYING LLC IN NOVEMBER, 2018. PROPERTY LINES AND ABUTTING OWNER INFORMATION OBTAINED FROM THE "OFFICE OF GEOGRAPHIC INFORMATION (MASSGIS), COMMONWEALTH OF MASSACHUSETTS, MASSIT". IT IS NOT INTENDED TO REFLECT THAT A TITLE SEARCH WAS PERFORMED.

   – VERTICAL DATUM: TAUNTON CITY BASE
   – HORIZONTAL DATUM: MASSACHUSETTS STATE PLANE – MAINLAND ZONE NAD83

2. THE LOCATION, SIZE, AND MATERIAL OF EXISTING PIPES, DUCTS, CONDUITS AND OTHER UNDERGROUND STRUCTURES AND/OR UTILITIES SHOWN ON THESE PLANS ARE FROM THE BEST SOURCES AVAILABLE AT PRESENT AND ARE NOT WARRANTED TO BE EXACT, NOR IS IT WARRANTED THAT ALL UNDERGROUND PIPES, UTILITIES OR STRUCTURES ARE SHOWN. EXACT LOCATION TO BE DETERMINED BY CONTRACTOR IN FIELD.

3. EXISTING UTILITIES DEPICTED ARE APPROXIMATE ONLY. PRIOR TO CONSTRUCTION, THE CONTRACTOR SHALL VERIFY LOCATIONS OF ALL EXISTING UTILITIES AND NOTIFY ALL UTILITY COMPANIES (PUBLIC AND PRIVATE). IN ADDITION, "DIG SAFE" MUST BE CONTACTED AT 1(800)–322–4844.

4. EXISTING UTILITIES ENCOUNTERED DURING CONSTRUCTION SHALL BE PROTECTED AND SUPPORTED AT ALL TIMES BY THE CONTRACTOR. THE CONTRACTOR SHALL CONDUCT HIS OPERATIONS TO INTERFERE AS LITTLE AS POSSIBLE WITH EXISTING UTILITIES. PAYMENT FOR PROVIDING SAID PROTECTION AND SUPPORTS SHALL BE CONSIDERED A PART OF AND PAID FOR UNDER THE APPROPRIATE ITEMS UNLESS OTHERWISE INDICATED AND/OR DIRECTED BY THE OWNER. THE CONTRACTOR SHALL HAVE NO CLAIM FOR ADDITIONAL COMPENSATION BY REASON OF DELAY AND/OR INCONVENIENCE IN ADAPTING HIS OPERATIONS ACCORDINGLY.

5. ALL DIMENSIONS AND JOB RELATED CONDITIONS ARE TO BE VERIFIED BY THE CONTRACTOR. ANY DISCREPANCIES FOUND ARE TO BE BROUGHT TO THE ATTENTION OF THE OWNER/ENGINEER AND PROPERLY RESOLVED BEFORE PROCEEDING WITH THAT PORTION OF THE WORK. CONTINUATION WITH OTHER ASPECTS OF THE WORK SHALL PROCEED WITHOUT DELAY OR CAUSE FOR CLAIM.

6. IF TRENCH DEWATERING IS REQUIRED, DISCHARGE OF FINES OR SEDIMENTS TO THE TAUNTON RIVER, CATCH BASINS, WETLANDS, PONDS OR THE OCEAN IS NOT PERMITTED. CONTRACTOR IS RESPONSIBLE FOR DESIGNING, OPERATING AND MAINTAINING DEWATERING SYSTEMS AND SEDIMENT REMOVAL SYSTEMS. DESIGN SHALL BE COMPLETED UNDER THE DIRECT SUPERVISION OF A PROFESSIONAL CIVIL ENGINEER REGISTERED IN MASSACHUSETTS. TREATMENT SYSTEM SHALL INCLUDE FILTRATION, SETTLING BASINS, SEDIMENTATION TANKS OR OTHER APPROVED METHOD. DISCHARGE LOCATION TO BE PROTECTED AGAINST EROSION AND SCOURING.

7. WHERE EXISTING MATERIALS ARE ENCOUNTERED WHICH, IN THE OPINION OF THE OWNER/ENGINEER ARE UNSUITABLE FOR BEDDING, BACKFILLING OR OTHER INTENDED USE, SUCH MATERIALS SHALL BE REMOVED AS DIRECTED AND REPLACED WITH SUITABLE BANK–RUN GRAVEL, CRUSHED STONE AND/OR SELECTED BORROW, AS DIRECTED BY THE OWNER/ENGINEER AND PAID FOR UNDER THE APPROPRIATE BID ITEMS.

8. ALL GRASSED AREAS DISTURBED BY THE CONSTRUCTION OPERATIONS SHALL BE LOAMED AND SEEDED IN ACCORDANCE WITH THE SPECIFICATIONS. FINAL RESTORATION SHALL BE EQUAL TO OR BETTER THAN THAT WHICH EXISTED PRIOR TO CONSTRUCTION AS DETERMINED SOLELY BY THE OWNER/ENGINEER.

9. WORK PERFORMED BY THE CONTRACTOR SHALL NOT INTERFERE WITH WASTEWATER FLOWS THROUGH THE WASTEWATER TREATMENT FACILITY. THE CONTRACTOR SHALL PROVIDE ALL TEMPORARY EQUIPMENT, PIPING, FITTINGS AND APPURTENANCES NECESSARY TO COMPLETE THIS CONTRACT. THE CONTRACTOR SHALL INSTALL AND MAINTAIN ALL TEMPORARY UNIT BYPASS–LINES UNTIL THE MODIFICATIONS AND CONSTRUCTION ARE COMPLETE. REFER TO SPECIFICATION SECTION 01810 AND 02149 FOR BYPASS REQUIREMENTS.

10. THE CONTRACTOR SHALL CONFINE ALL ACTIVITIES FOR CONSTRUCTION PURPOSES WITHIN THE INDICATED LIMITS OF WORK AS SHOWN IN THE CONTRACT DRAWINGS. ALL SURFACES DAMAGED OUTSIDE THE INDICATED LIMITS SHALL BE REPLACED IN KIND AT CONTRACTOR'S EXPENSE.

11. CONTRACTOR IS RESPONSIBLE FOR THE LEGAL AND PROPER DISPOSAL OF ALL DEMOLITION MATERIAL ACCORDING TO THE LAWS OF THE MUNICIPALITY IN WHICH THE WORK IS BEING DONE AND THE COMMONWEALTH OF MASSACHUSETTS. ALL DEMOLITION MATERIAL INCLUDING PUMPS, PIPE, AND BRICK THAT WAS IN CONTACT WITH SEWAGE SHALL BE CLEANED IN ACCORDANCE WITH MADEP REQUIREMENTS AND DISPOSED OF ACCORDINGLY. ONCE CLEANED, DEMOLITION MATERIALS SHALL NOT BE CONSIDERED SPECIAL WASTE.

12. GENERAL CONTRACTOR SHALL COORDINATE WITH THEIR ELECTRICAL SUBCONTRACTOR AND DEFINE THE SCOPE OF WORK IDENTIFIED IN DIVISION 16, TO BE COMPLETED BY THE GC.

YARD PIPING NOTES

1. EXISTING YARD PIPING AS SHOWN ON THE DRAWINGS INCORPORATES PROPOSED IMPROVEMENTS MADE UNDER PHASE 1 AND PHASE 1A (SOLIDS HANDLING) CONTRACTS.

2. CONTRACTOR SHALL CONDUCT TEST PITS AS SHOWN AND AT ALL LOCATIONS WHERE NEW PIPING IS TO BE CONNECTED TO EXISTING PIPING AND STRUCTURES TO FIELD VERIFY THE EXACT SIZE, MATERIAL, LOCATION, INVERT ELEVATION AND ALIGNMENT (VERTICAL AND HORIZONTAL) OF EXISTING UNDERGROUND PIPES AND STRUCTURES.

3. THE CONTRACTOR SHALL CONDUCT TEST PITS, AS REQUIRED, IN ORDER TO ASCERTAIN THE EXACT LOCATION OF EXISTING UNDERGROUND UTILITIES.

4. WHERE PIPING IS TO BE CONNECTED TO EXISTING PIPING OR STRUCTURES, THE CONTRACTOR SHALL FURNISH AND INSTALL ALL ADAPTERS, FITTINGS AND ADDITIONAL PIPE (REQUIRED AS A RESULT OF CUTTING THE EXISTING PIPE BACK) TO COMPLETE THE CONNECTION AS REQUIRED.

5. PIPE REPAIR CLAMPS SHALL BE MADE OF STAINLESS STEEL AND PROVIDED WITH TYPE 304 STAINLESS STEEL BOLTS AND NUTS.

6. ALL PIPING SHALL BE PROVIDED WITH FLEXIBLE CONNECTIONS WHERE EXITING OR ENTERING STRUCTURES AND BUILDINGS. FLEXIBLE CONNECTIONS SHALL BE COORDINATED WITH PIPE MANUFACTURER AND APPROVED BY THE ENGINEER.

PROJECT COORDINATION

1. PHASE 1 OF THE IMPROVEMENTS TO THE TAUNTON WWTF WILL BE UNDER CONSTRUCTION WHILE PHASE 2 OF THE PROJECT IS UNDER CONSTRUCTION. THE PHASE 2 CONTRACTOR SHALL COORDINATE HIS/HER WORK WITH CONTRACTOR PERFORMING PHASE 1.

2. PHASE 1 WORK THAT COULD IMPACT THE SCHEDULE OF PHASE 2 INCLUDES THE NEW BLOWER BUILDING, PRIMARY CLARIFIER NO.4, AND MODIFICATIONS TO THE CHLORINE CONTACT TANKS.

SOIL EROSION AND SEDIMENTATION CONTROL NOTES

1. THE CONTRACTOR SHALL FOLLOW THE APPROVED ORDER OF CONDITIONS AND DIRECTION OF THE ENGINEER WITH REGARD TO INSTALLATION, MAINTENANCE, AND REPAIR OF ALL SOIL EROSION AND SEDIMENTATION CONTROL (SESC) MEASURES ON THE PROJECT SITE FOR THE FULL DURATION OF THE CONSTRUCTION PERIOD. TEMPORARY SESC MEASURES MAY INCLUDE, BUT SHALL NOT BE LIMITED TO, CONSTRUCTION ENTRANCE PADS, COMPOST FILTER SOCKS, HAY/STRAW BALES, SILT FENCE, CATCH BASIN INSERTS, ETC. PLEASE REFER TO THE ORDER OF CONDITIONS FOR ADDITIONAL INFORMATION.

2. ALL SESC MEASURES SHALL BE INSTALLED BY THE CONTRACTOR AND INSPECTED BY THE ENGINEER PRIOR TO THE START OF CONSTRUCTION. THE SESC MEASURES SHALL BE REGULARLY INSPECTED, CLEANED AND MAINTAINED THROUGHOUT THE DURATION OF CONSTRUCTION OPERATIONS IN ACCORDANCE WITH THE ORDER OF CONDITIONS. SESC MEASURES SHALL ALSO BE INSPECTED AND CLEANED AFTER ALL SIGNIFICANT STORM EVENTS AS STIPULATED BY THE SESC PLAN AND AT THE DIRECTION OF THE OWNER OR ENGINEER.

3. CONTRACTOR SHALL MAINTAIN AN ADEQUATE SUPPLY OF SESC MEASURE MATERIALS ON SITE TO BE INSTALLED IN AREAS WHERE EXISTING SESC MEASURES HAVE FAILED OR ARE NECESSARY AS DETERMINED BY THE ENGINEER. NO WORK OR STORAGE OF CONSTRUCTION EQUIPMENT WILL BE PERMITTED OUTSIDE THE LIMIT OF DISTURBANCE.

4. THE CONTRACTOR SHALL COORDINATE WITH THE ENGINEER FOR REGULAR INSPECTION AND REPORTING REQUIREMENTS.

5. SESC MEASURES SHALL BE MAINTAINED UNTIL SITE WORK IS COMPLETE AND ALL EXPOSED SOILS ARE SATISFACTORILY STABILIZED. UPON PERMANENT STABILIZATION OF ALL DISTURBED SOILS, THE SESC MEASURES SHALL BE REMOVED AND PROPERLY DISPOSED. PROVIDE SESC MEASURES AT PERIMETERS OF ALL EXCAVATION AREAS, DISTURBED SURFACES AND AT ALL CATCH BASINS ADJACENT TO DISTURBED AREAS. PROVIDE COMPOST FILTER SOCKS IN ACCORDANCE WITH DIVISION 2 SPECIFICATION REQUIREMENTS AND AS SHOWN ON THE CIVIL DETAIL DRAWINGS.

6. ALL MITIGATIVE FEATURES, FACILITIES AND SYSTEMS OF TREATMENT AND CONTROL THAT MAY BE INSTALLED OR USED SHALL BE PROPERLY MAINTAINED TO PREVENT HARM TO AREAS ADJACENT TO THE SITE.

TREE PRESERVATION NOTES

1. PRIOR TO CONSTRUCTION, DETERMINE REQUIRED CLEARANCES FOR CONSTRUCTION OPERATIONS AND PRUNE TREES ACCORDINGLY.

2. BRANCHES OR LIMBS DAMAGED DURING CONSTRUCTION SHALL BE CUT BACK TO THE TRUNK OR A LATERAL BRANCH.

3. ROOTS LARGER THAN 1.5" IN DIAMETER ENCOUNTERED IN EXCAVATIONS SHALL BE CUT OFF SQUARELY USING A SHARP ARBORIST SAW.

4. STRIP, SCREEN AND SEPARATELY STOCKPILE TOPSOIL PRIOR TO EXCAVATING IN UNPAVED AREAS. FOLLOWING CONSTRUCTION AND BACKFILL OPERATIONS IN UNPAVED AREAS, PLACE TOPSOIL BACK IN THE APPROPRIATE LOCATIONS WITHOUT COMPACTION AND VERTICALLY MULCH ROOT SYSTEM. NO AMENDMENTS SHALL BE ADDED.

5. IMMEDIATELY FOLLOWING BACKFILL OPERATIONS, PROVIDE DEEP WATERING OF THE ROOT SYSTEM, APPLICATION OF FERTILIZER, AND VERTICAL MULCHING.

6. MAINTAIN STORAGE OF EQUIPMENT AND MATERIALS AWAY FROM TREES A DISTANCE AT LEAST TWO (2) TIMES THE DISTANCE OF THE RADIUS OF THE TREE CANOPY.

RESOURCE AREA NOTES

1. WORK IN THE RESOURCE AREAS SHALL BE IN STRICT ACCORDANCE WITH THE ORDER OF CONDITIONS ISSUED BY THE CITY OF TAUNTON CONSERVATION COMMISSION AND OTHER APPLICABLE PERMIT CONDITIONS INCLUDING THE 401 WATER QUALITY CERTIFICATION.

2. EXCESS SOIL, ROCK, STUMPS, TREES, AND OTHER REFUSE SHALL BE TEMPORARILY STOCKPILED OUTSIDE OF ALL BUFFER AND RESOURCE AREAS. THESE MATERIALS SHALL BE DISCARDED OFF–SITE IN AN APPROVED LANDFILL.

3. THE STRAW WATTLE/SILTFENCE LINE ILLUSTRATED ON THESE PLANS IS TO BE STAKED IN THE FIELD PRIOR TO CONSTRUCTION AND SHALL SERVE AS THE STRICT LIMITS OF DISTURBANCE FOR WETLAND AREA. NO ALTERATIONS, INCLUDING VEGETATIVE CLEARING OR SURFACE DISTURBANCE, SHALL OCCUR BEYOND THIS STRAW WATTLE/SILT FENCE LINE.

4. THE LIMITS OF CLEARING, GRADING AND DISTURBANCE SHALL BE KEPT TO A MINIMUM WITHIN THE PROPOSED AREA OF CONSTRUCTION. AREAS OUTSIDE OF THESE LIMITS SHALL REMAIN UNDISTURBED IN A NATURAL CONDITION.

5. SOIL EROSION AND SEDIMENT CONTROLS SHALL BE INSTALLED PRIOR TO THE INITIATION OF PROJECT CONSTRUCTION. THE CONTRACTOR SHALL BE RESPONSIBLE FOR MAINTENANCE AND INSPECTION OF THE CONTROLS DURING CONSTRUCTION. SEE SOIL EROSION AND SEDIMENT CONTROL NOTES.

6. NO HEAVY MACHINERY SHALL BE USED WITHIN RESOURCE AREAS.

PREPARED BY

BETA
www.BETA-Inc.com

REGISTERED PROFESSIONAL

COMMONWEALTH OF MASSACHUSETTS
JOSEPH FEDERICO, JR.
No. 30663
REGISTERED PROFESSIONAL ENGINEER

SUBCONSULTANT

PROJECT

Taunton Wastewater Treatment Facility Improvements Phase 2

Taunton, MA

TITLE

General Civil Notes

NO.	REVISIONS	DATE

DRAWN BY:	BM
DESIGNED BY:	BM
CHECKED BY:	SR
ISSUE DATE:	3/31/2022
BETA JOB NO.:	6050

SCALE

NONE

UNLESS OTHERWISE NOTED OR CHANGED BY REPRODUCTION

SHEET NO.

G-1.3

3/31/2022 9:57 AM J:\TAUNTON\WWTF DESIGN\AUTOCAD\PLAN SET\PHASE 2\DRAWING INDEX, LEGEND & GENERAL NOTES.DWG (BETA STD BW.CTB)

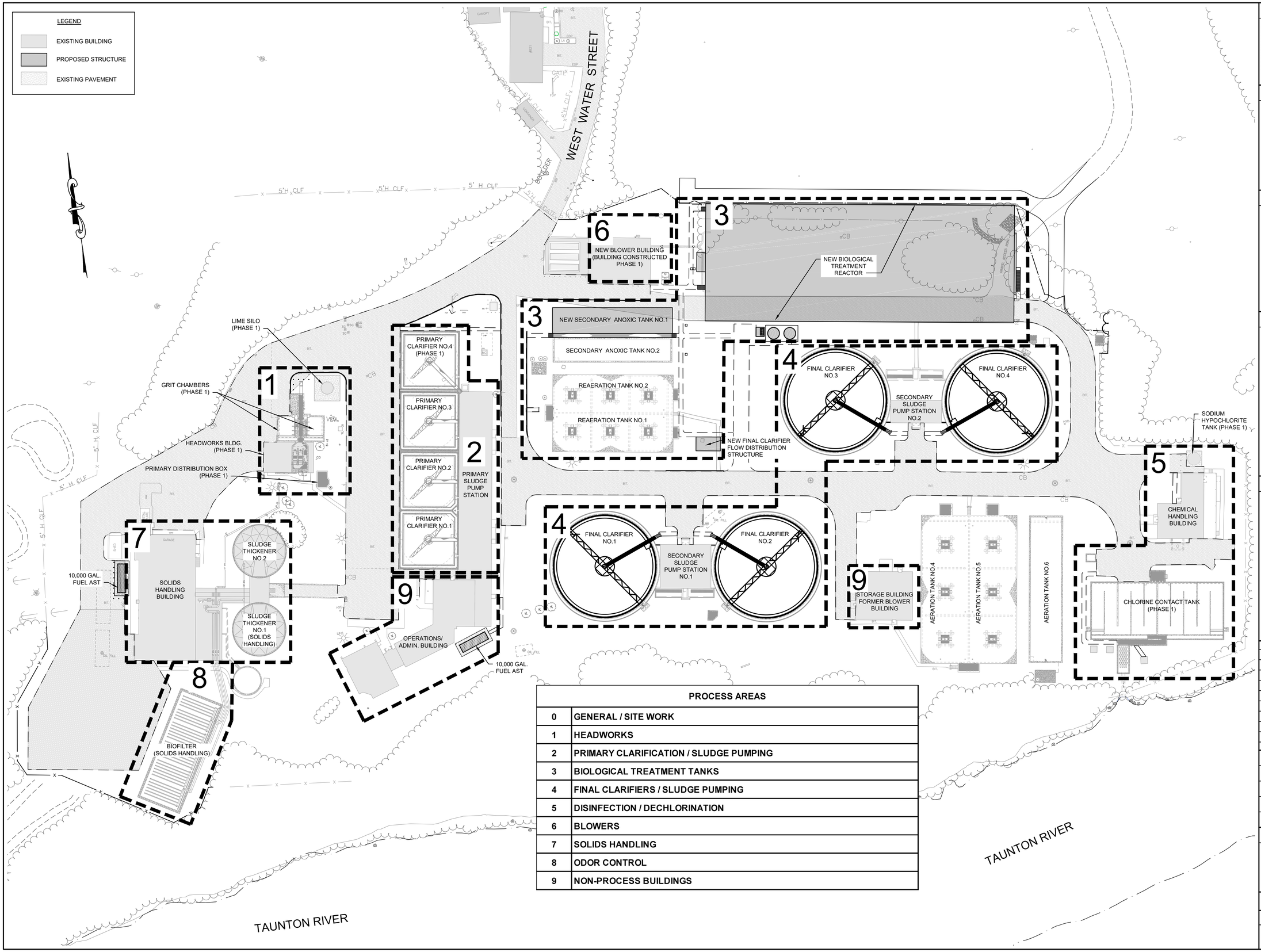

PROCESS AREAS	
0	GENERAL / SITE WORK
1	HEADWORKS
2	PRIMARY CLARIFICATION / SLUDGE PUMPING
3	BIOLOGICAL TREATMENT TANKS
4	FINAL CLARIFIERS / SLUDGE PUMPING
5	DISINFECTION / DECHLORINATION
6	BLOWERS
7	SOLIDS HANDLING
8	ODOR CONTROL
9	NON-PROCESS BUILDINGS

PREPARED BY

BETA
www.BETA-Inc.com

REGISTERED PROFESSIONAL

COMMONWEALTH OF MASSACHUSETTS
JOSEPH FEDERICO, JR.
No. 30663
REGISTERED PROFESSIONAL ENGINEER

SUBCONSULTANT

PROJECT

Taunton Wastewater Treatment Facility Improvements Phase 2

Taunton, MA

TITLE

WWTF Process Areas Key Plan

NO.	REVISIONS	DATE

DRAWN BY:	BM
DESIGNED BY:	MA
CHECKED BY:	SR
ISSUE DATE:	3/31/2022
BETA JOB NO.:	6050

SCALE

40 0 40 80
SCALE IN FEET: 1"=40'

UNLESS OTHERWISE NOTED OR CHANGED BY REPRODUCTION

SHEET NO.

G-1.4

3/31/2022 9:57 AM J:\TAUNTON\WWTF DESIGN\AUTOCAD\PLAN SET\PHASE 2\WWTF PROCESS AREAS.DWG (BETA STD BW.CTB)

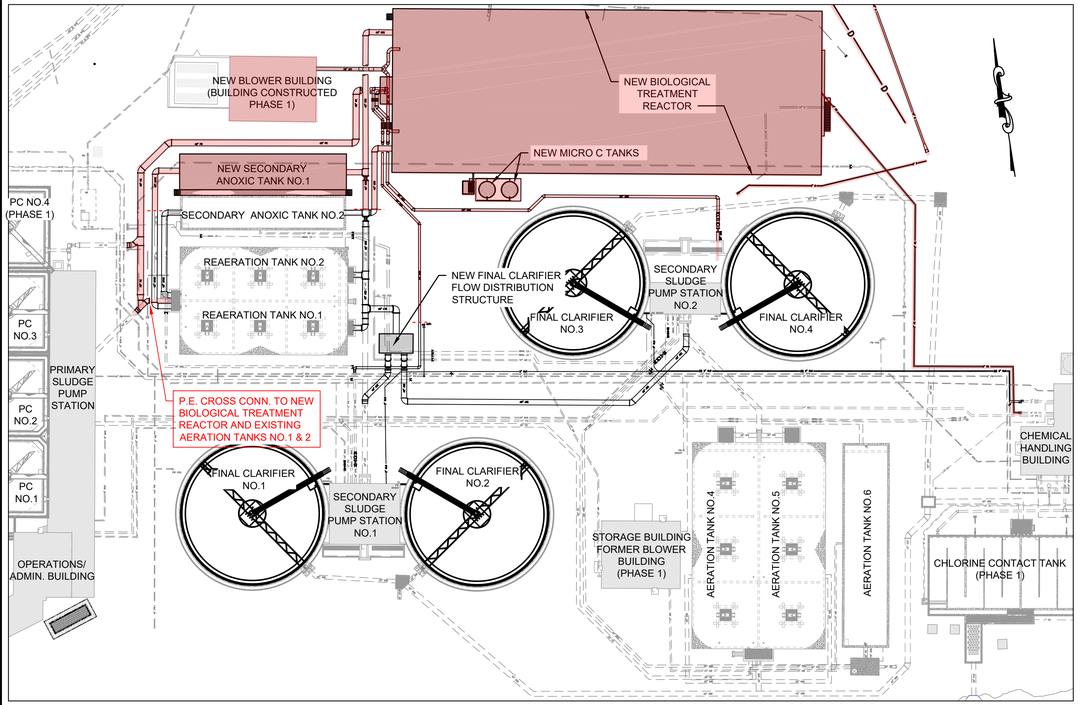

PHASE A
SCALE: 1" = 50'

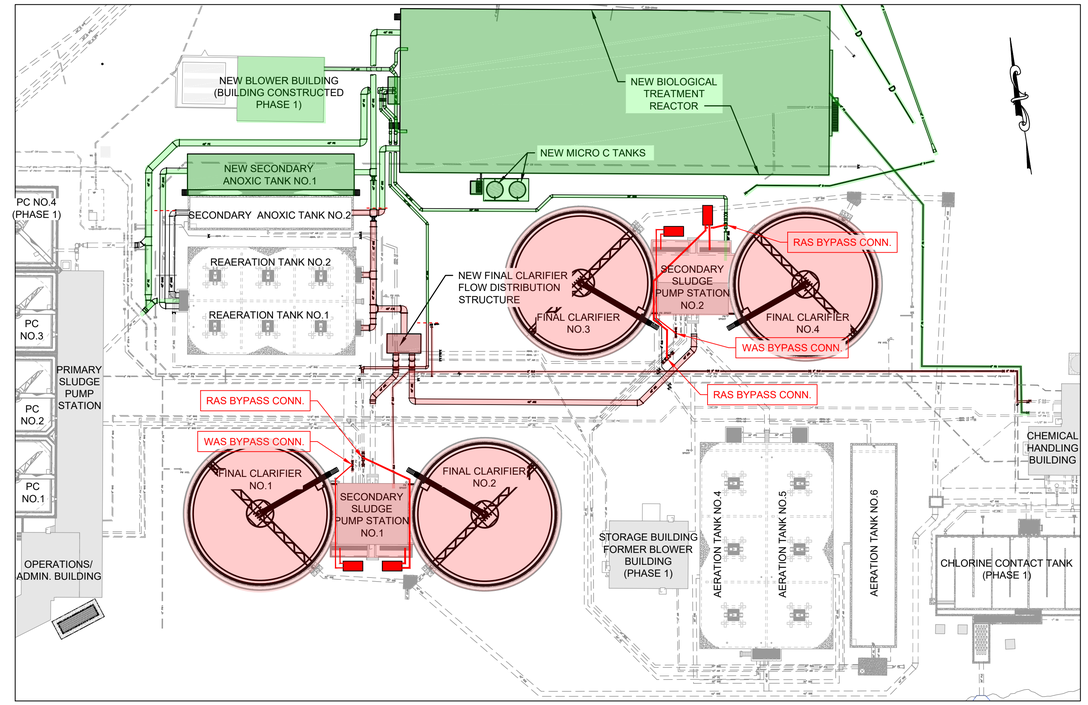

PHASE B
SCALE: 1" = 50'

KEY

- PHASE CONSTRUCTION
- COMPLETED CONSTRUCTION
- STARTUP (BIOLOGICAL TREATMENT REACTOR AND BLOWERS ONLY)

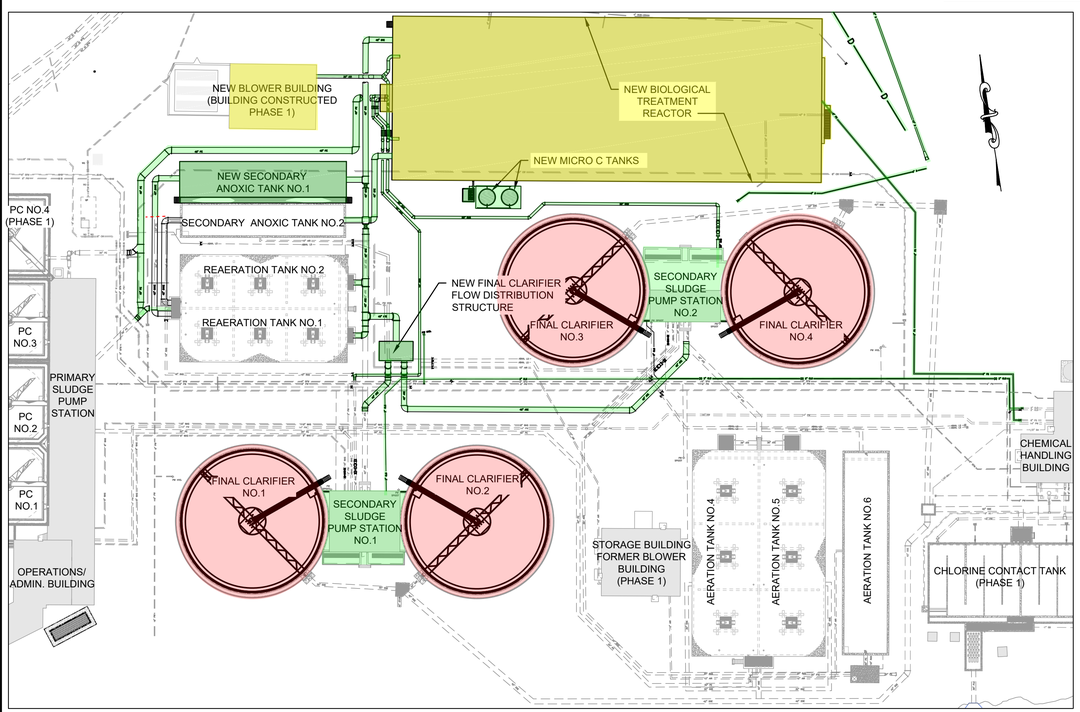

PHASE C
SCALE: 1" = 50'

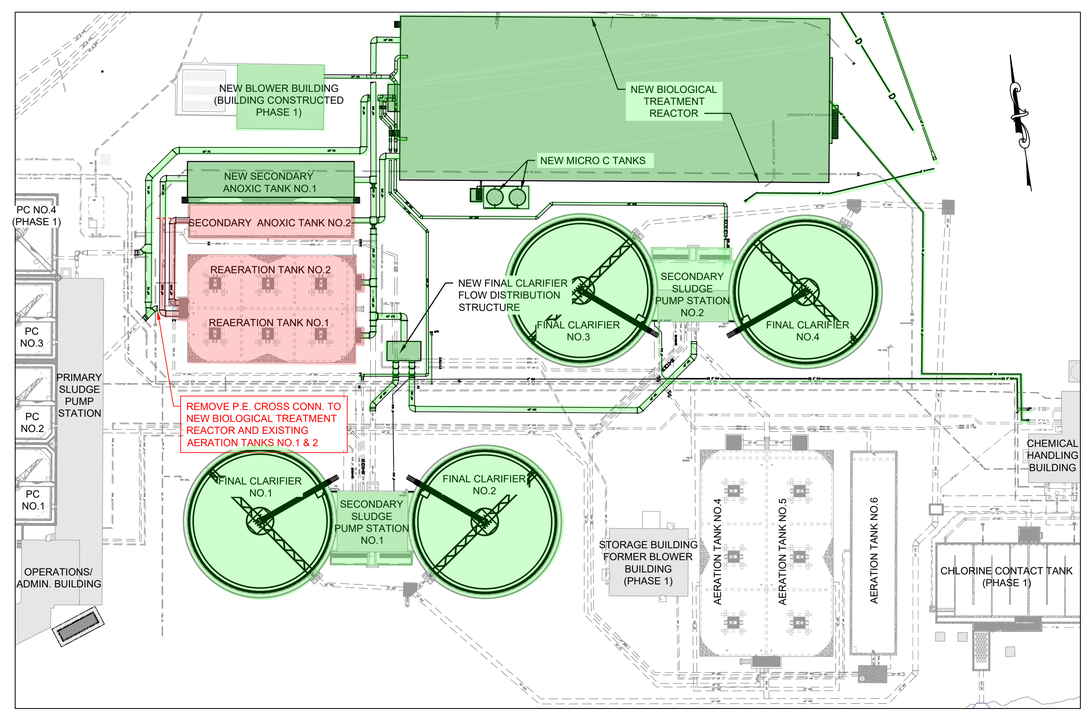

PHASE D
SCALE: 1" = 50'

PREPARED BY

BETA
www.BETA-Inc.com

REGISTERED PROFESSIONAL

COMMONWEALTH OF MASSACHUSETTS
JOSEPH FEDERICO, JR.
No. 30663
REGISTERED PROFESSIONAL ENGINEER

SUBCONSULTANT

PROJECT

Taunton Wastewater Treatment Facility Improvements Phase 2

Taunton, MA

TITLE

Recommended Sequence of Construction Plan

NO.	REVISIONS	DATE

DRAWN BY:	BM
DESIGNED BY:	JD
CHECKED BY:	SR
ISSUE DATE:	3/31/2022
BETA JOB NO.:	6050

SCALE

AS SHOWN

UNLESS OTHERWISE NOTED OR CHANGED BY REPRODUCTION

SHEET NO.

G-1.5

3/27/2022 2:49 PM J:\TAUNTON\WWTF DESIGN\AUTOCAD\PLAN SET\PHASE 2\PHASE 2 - CONSTRUCTION SEQUENCE PLANS.DWG (BETA STB BW STB)

Flow Condition	Influent Flow Rate (mgd)	Plant Recycle Flow Rate (mgd)	Return Sludge Flow Rate (mgd)	Internal Recycle Flow Rate (mgd)	Number of Tanks	Number of Tanks in Service	Tank Description
Extreme Wet Weather (Future)*	30.0	NA	NA	NA	2	2	Chloring Contact Tank
Peak Hourly Flow	25.0	1.5	8.4	40	2	2	Aerated Grit Chamber
					2	2	Influent Screen
					4	4	Primary Clarifiers
					2	2	Biological Treatment Tank
					4	4	Final Clarifiers
					2	2	Chloring Contact Tank
Average Daily Flow (November - April)	10.2	1.5	8.4	34	2	2	Aerated Grit Chamber
					2	2	Influent Screen
					4	3	Primary Clarifiers
					2	2	Biological Treatment Tank
					4	3	Final Clarifiers
					2	2	Chloring Contact Tank
Average Daily Flow (May - October)	8.4	1.5	8.4	34	2	2	Aerated Grit Chamber
					2	2	Influent Screen
					4	3	Primary Clarifiers
					2	2	Biological Treatment Tank
					4	3	Final Clarifiers
					2	2	Chloring Contact Tank

* PEAK HOURLY FLOW PLUS 5 MGD THROUGH THE CHLORINE CONTACT TANKS

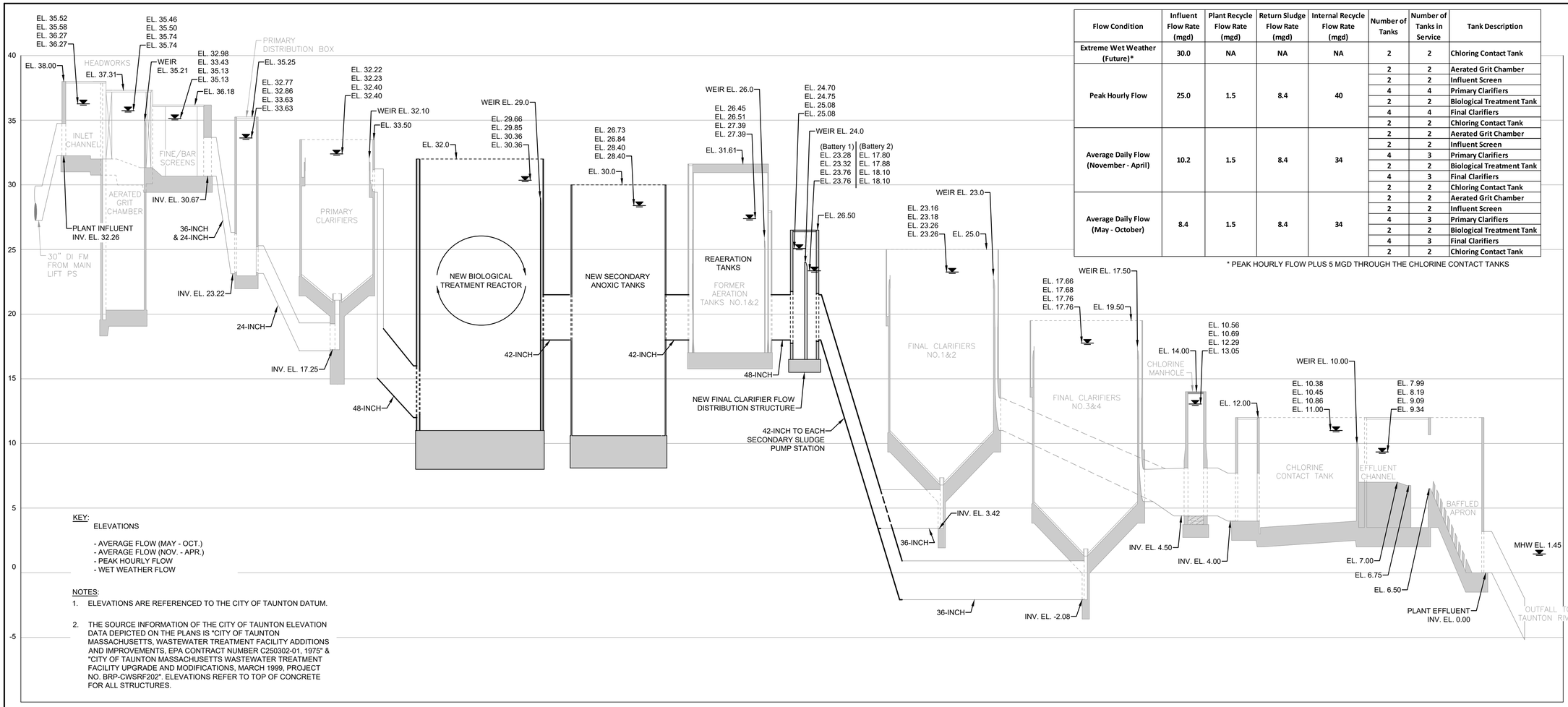

KEY:

ELEVATIONS

- AVERAGE FLOW (MAY - OCT.)
- AVERAGE FLOW (NOV. - APR.)
- PEAK HOURLY FLOW
- WET WEATHER FLOW

NOTES:

1. ELEVATIONS ARE REFERENCED TO THE CITY OF TAUNTON DATUM.
2. THE SOURCE INFORMATION OF THE CITY OF TAUNTON ELEVATION DATA DEPICTED ON THE PLANS IS "CITY OF TAUNTON MASSACHUSETTS, WASTEWATER TREATMENT FACILITY ADDITIONS AND IMPROVEMENTS, EPA CONTRACT NUMBER C250302-01, 1975" & "CITY OF TAUNTON MASSACHUSETTS WASTEWATER TREATMENT FACILITY UPGRADE AND MODIFICATIONS, MARCH 1999, PROJECT NO. BRP-CWSRF202". ELEVATIONS REFER TO TOP OF CONCRETE FOR ALL STRUCTURES.

Hydraulic Profile: Proposed

SCALE: VERT 1" = 4'

(PHASE 2 IMPROVEMENTS SHOWN IN BOLD PRINT)

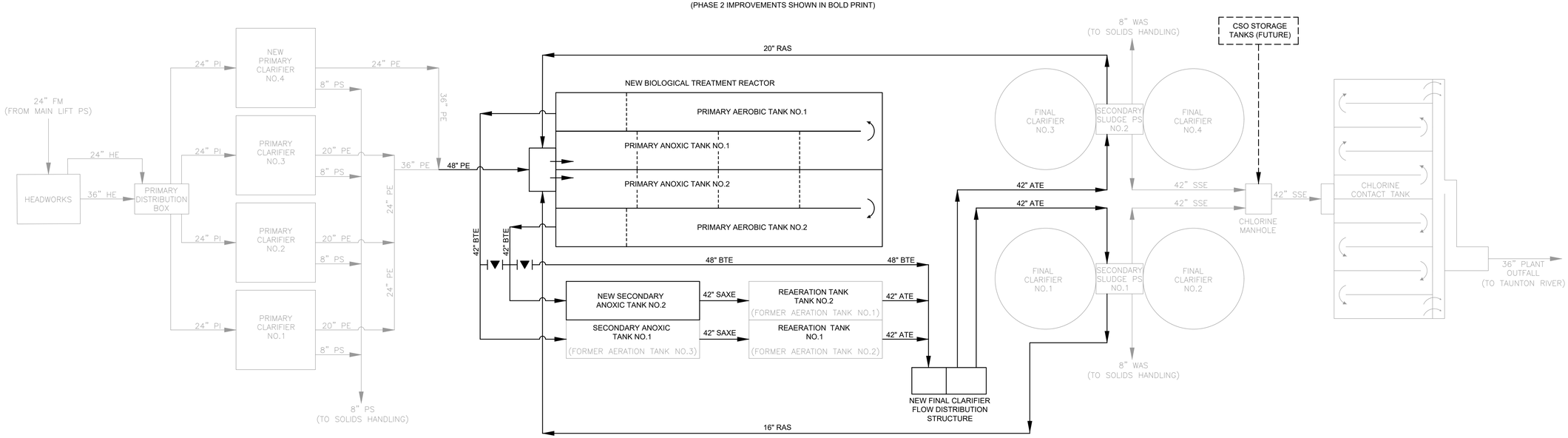

PREPARED BY

BETA
www.BETA-Inc.com

REGISTERED PROFESSIONAL

COMMONWEALTH OF MASSACHUSETTS
JOSEPH FEDERICO, JR.
No. 30663
REGISTERED PROFESSIONAL ENGINEER

SUBCONSULTANT

PROJECT

Taunton Wastewater Treatment Facility Improvements Phase 2

Taunton, MA

TITLE

Proposed Facilities Hydraulic Profile

NO.	REVISIONS	DATE

DRAWN BY:	BM
DESIGNED BY:	AG
CHECKED BY:	SR
ISSUE DATE:	3/31/2022
BETA JOB NO.:	6050

SCALE

AS SHOWN

UNLESS OTHERWISE NOTED OR CHANGED BY REPRODUCTION

SHEET NO.

G-2.1

3/31/2022 9:58 AM J:\TAUNTON\WWTF DESIGN\AUTOCAD\PLAN SET\PHASE 2\WWTF HYDRAULIC PROFILE - PROP.DWG (BETA STD BW.CTB)

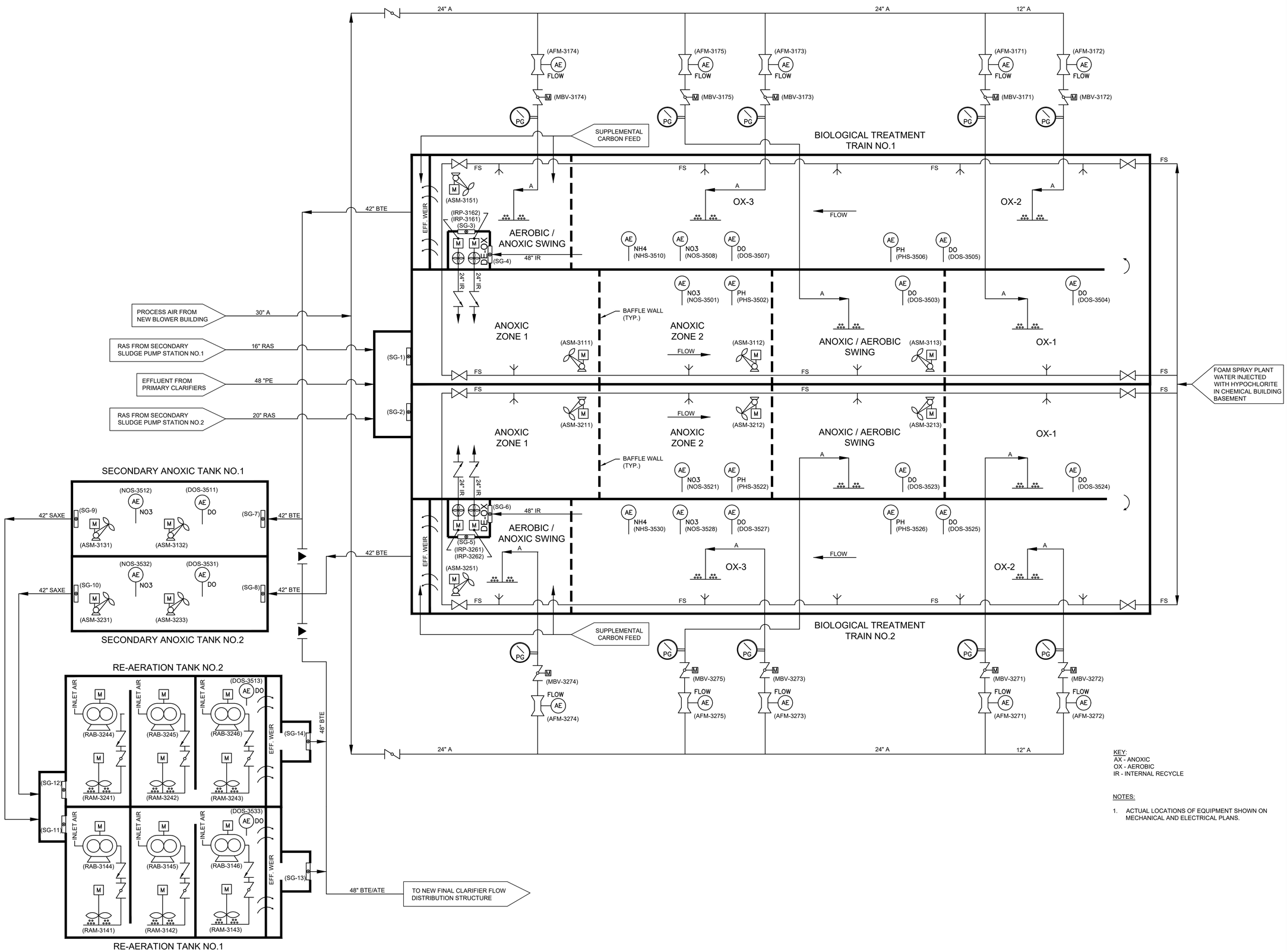

KEY:
AX - ANOXIC
OX - AEROBIC
IR - INTERNAL RECYCLE

NOTES:

1. ACTUAL LOCATIONS OF EQUIPMENT SHOWN ON MECHANICAL AND ELECTRICAL PLANS.

PREPARED BY

BETA
www.BETA-Inc.com

REGISTERED PROFESSIONAL

COMMONWEALTH OF MASSACHUSETTS
JOSEPH FEDERICO, JR.
No. 30663
REGISTERED PROFESSIONAL ENGINEER

SUBCONSULTANT

PROJECT

Taunton Wastewater Treatment Facility Improvements Phase 2

Taunton, MA

TITLE

Process Flow Diagram Biological Treatment Reactor

NO.	REVISIONS	DATE

DRAWN BY:	BM
DESIGNED BY:	SR
CHECKED BY:	SR
ISSUE DATE:	3/31/2022
BETA JOB NO.:	6050

SCALE

NONE

UNLESS OTHERWISE NOTED OR CHANGED BY REPRODUCTION

SHEET NO.

G-2.2

3/31/2022 9:58 AM J:\TAUNTON\WWTF DESIGN\AUTOCAD\PLAN SET\PHASE 2\WWTF PROCESS FLOW DIAGRAMS - PROP.DWG (BETA STD BW.CTB)

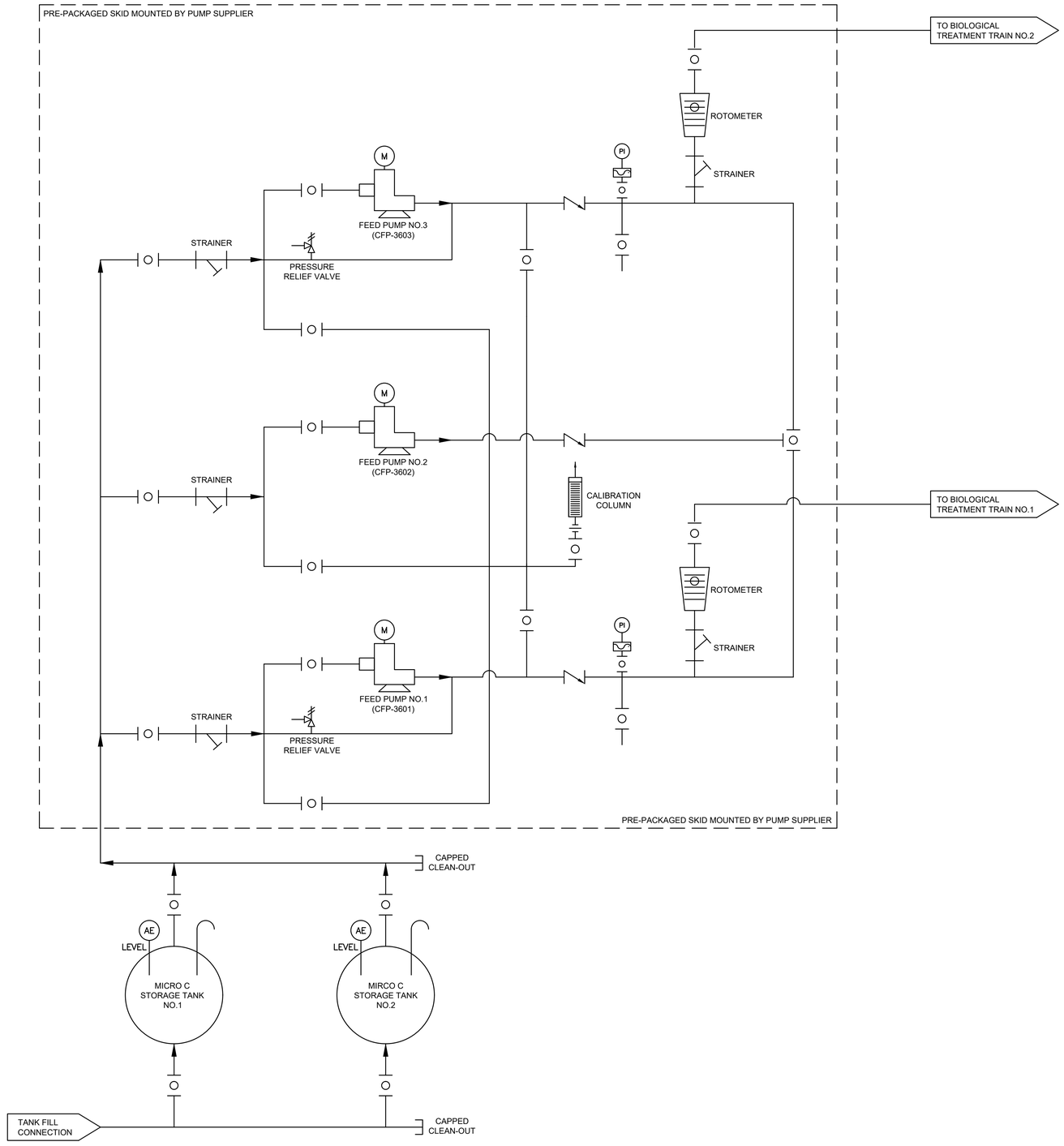

NOTES:

1. ACTUAL LOCATIONS OF EQUIPMENT SHOWN ON MECHANICAL AND ELECTRICAL PLANS.

PREPARED BY

BETA
www.BETA-Inc.com

REGISTERED PROFESSIONAL

COMMONWEALTH OF MASSACHUSETTS
JOSEPH FEDERICO, JR.
No. 30663
REGISTERED PROFESSIONAL ENGINEER

SUBCONSULTANT

PROJECT

Taunton Wastewater Treatment Facility Improvements Phase 2

Taunton, MA

TITLE

Process Flow Diagram Supplemental Carbon Feed System

NO.	REVISIONS	DATE

DRAWN BY:	BM
DESIGNED BY:	BM
CHECKED BY:	SR
ISSUE DATE:	3/31/2022
BETA JOB NO.:	6050

SCALE

NONE

UNLESS OTHERWISE NOTED OR CHANGED BY REPRODUCTION

SHEET NO.

G-2.3

3/31/2022 9:58 AM J:\TAUNTON\WWTF DESIGN\AUTOCAD\PLAN SET\PHASE 2\WWTF PROCESS FLOW DIAGRAMS - PROP.DWG (BETA STD BW.CTB)

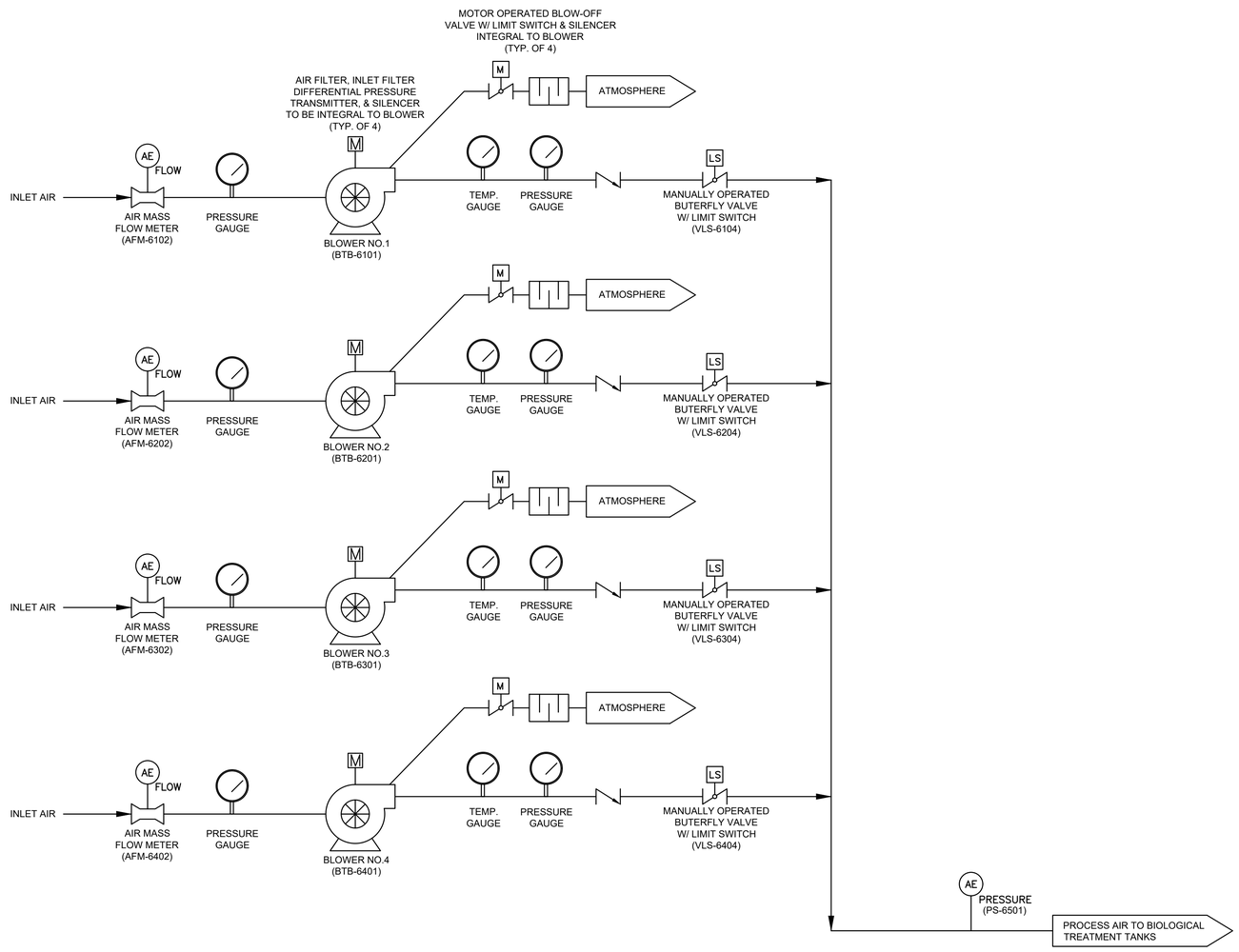

NOTES:

1. ACTUAL LOCATIONS OF EQUIPMENT SHOWN ON MECHANICAL AND ELECTRICAL PLANS.

PREPARED BY

BETA
www.BETA-Inc.com

REGISTERED PROFESSIONAL

COMMONWEALTH OF MASSACHUSETTS
JOSEPH FEDERICO, JR.
No. 30663
REGISTERED PROFESSIONAL ENGINEER

SUBCONSULTANT

PROJECT

Taunton Wastewater Treatment Facility Improvements Phase 2

Taunton, MA

TITLE

Process Flow Diagram
Aeration Blowers

NO.	REVISIONS	DATE

DRAWN BY:	BM
DESIGNED BY:	SR
CHECKED BY:	SR
ISSUE DATE:	3/31/2022
BETA JOB NO.:	6050

SCALE

NONE

UNLESS OTHERWISE NOTED OR CHANGED BY REPRODUCTION

SHEET NO.

G-2.4

3/31/2022 9:58 AM J:\TAUNTON\WWTF DESIGN\AUTOCAD\PLAN SET\PHASE 2\WWTF PROCESS FLOW DIAGRAMS - PROP.DWG (BETA STD BW.CTB)

NOTES:

1. NEW AND MODIFIED STRUCTURES AND EQUIPMENT SHOWN BOLD. EXISTING SHOWN LIGHT.
2. ACTUAL LOCATIONS OF EQUIPMENT SHOWN ON MECHANICAL AND ELECTRICAL PLANS.

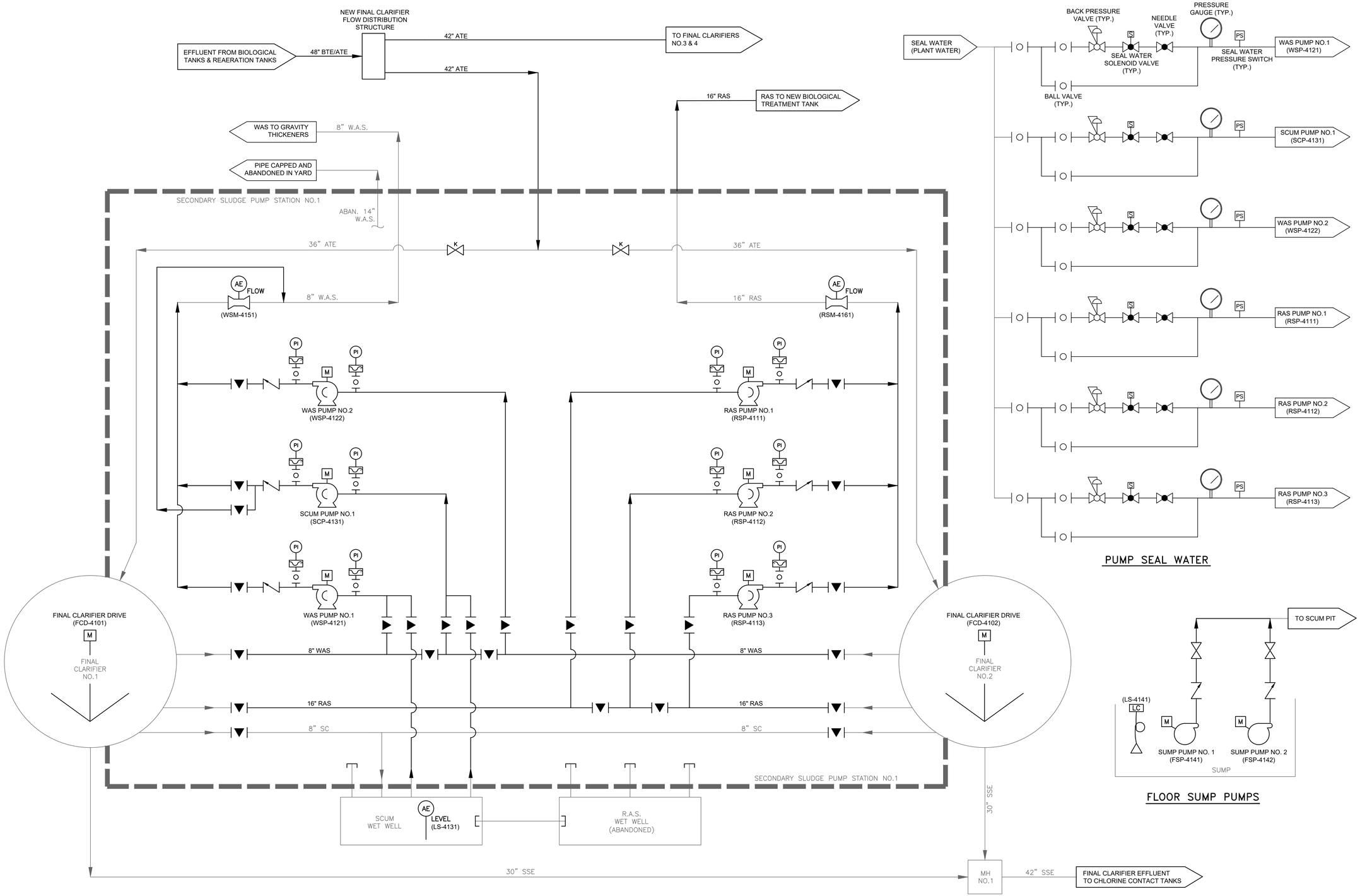

PREPARED BY

BETA
www.BETA-Inc.com

REGISTERED PROFESSIONAL

COMMONWEALTH OF MASSACHUSETTS
JOSEPH FEDERICO, JR.
No. 30663
REGISTERED PROFESSIONAL ENGINEER

SUBCONSULTANT

PROJECT

Taunton Wastewater Treatment Facility Improvements Phase 2

Taunton, MA

TITLE

Process Flow Diagram Final Clarifiers No.1 & 2 & Pump Station

NO.	REVISIONS	DATE

DRAWN BY:	BM
DESIGNED BY:	SR
CHECKED BY:	SR
ISSUE DATE:	3/31/2022
BETA JOB NO.:	6050

SCALE

NONE

UNLESS OTHERWISE NOTED OR CHANGED BY REPRODUCTION

SHEET NO.

G-2.5

3/31/2022 9:58 AM J:\TAUNTON\WWTF DESIGN\AUTOCAD\PLAN SET\PHASE 2\WWTF PROCESS FLOW DIAGRAMS - PROP.DWG (BETA STD BW.CTB)

NOTES:

1. NEW AND MODIFIED STRUCTURES AND EQUIPMENT SHOWN BOLD. EXISTING SHOWN LIGHT.
2. ACTUAL LOCATIONS OF EQUIPMENT SHOWN ON MECHANICAL AND ELECTRICAL PLANS.

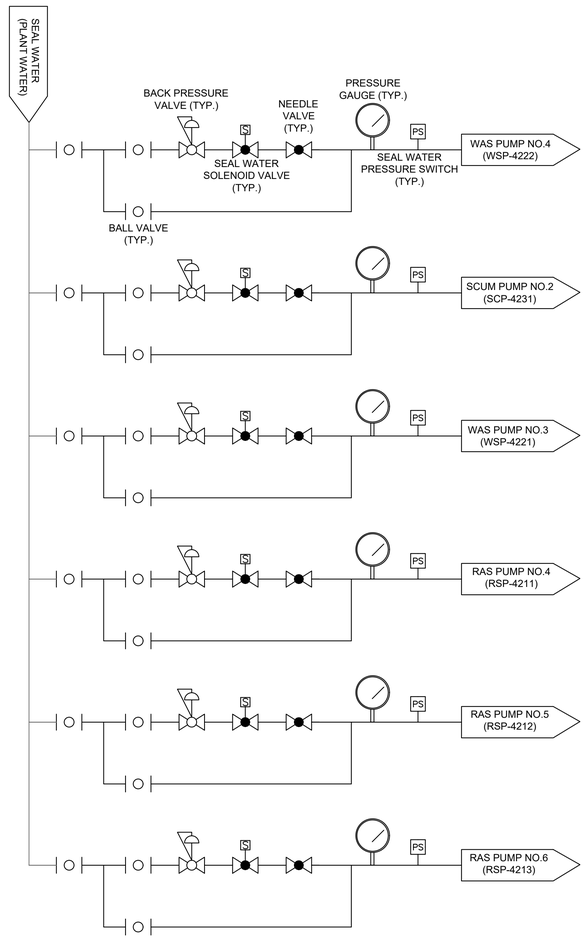

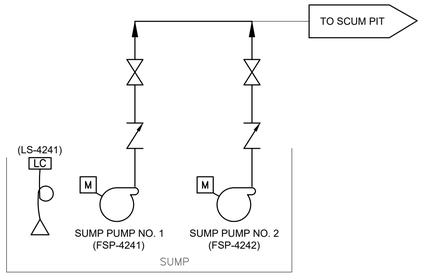

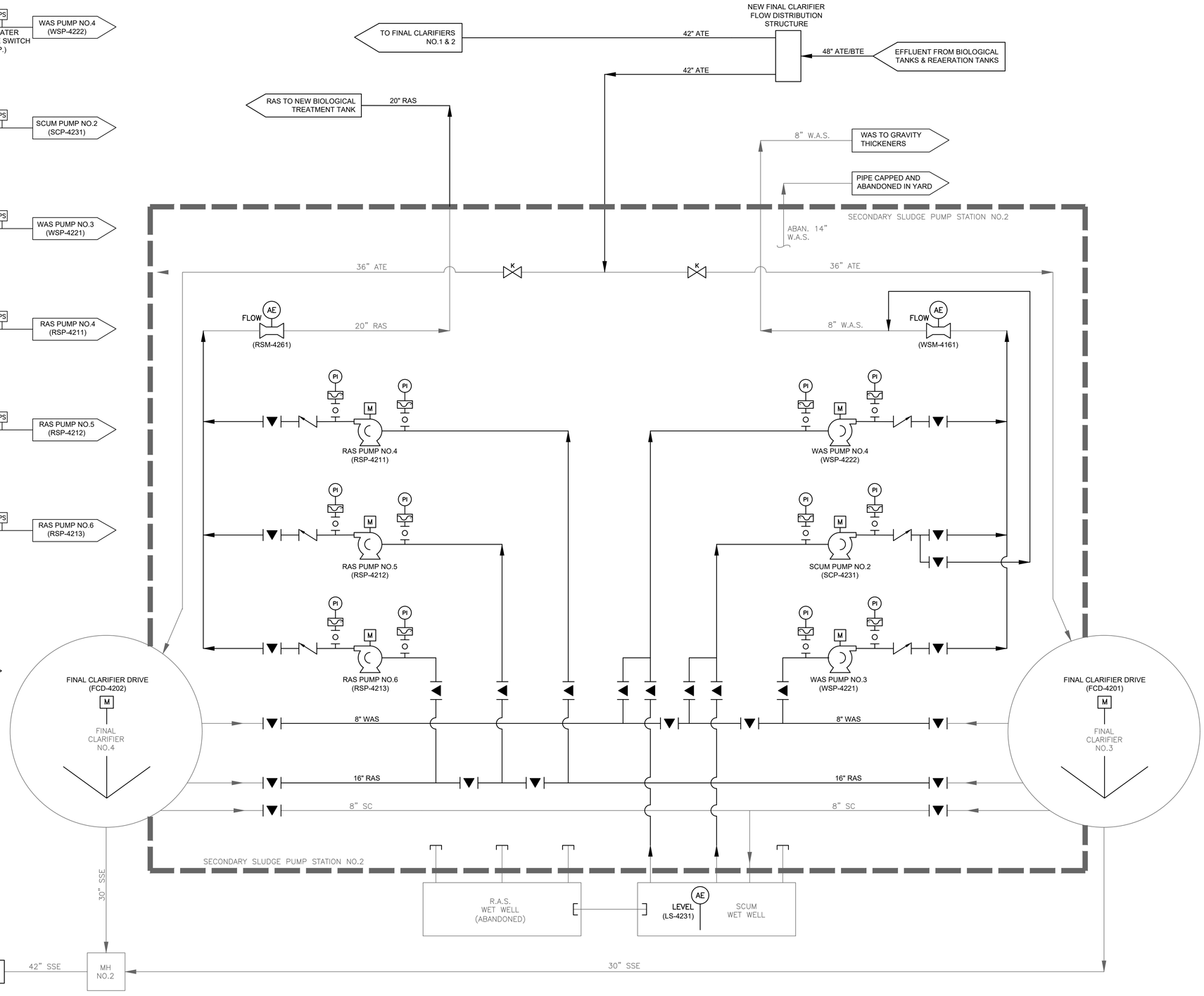

PREPARED BY

BETA
www.BETA-Inc.com

REGISTERED PROFESSIONAL

COMMONWEALTH OF MASSACHUSETTS
JOSEPH FEDERICO, JR.
No. 30663
REGISTERED PROFESSIONAL ENGINEER

SUBCONSULTANT

PROJECT

Taunton Wastewater Treatment Facility Improvements Phase 2

Taunton, MA

TITLE

Process Flow Diagram
Final Clarifiers No.3 & 4
& Pump Station

NO.	REVISIONS	DATE

DRAWN BY:	BM
DESIGNED BY:	SR
CHECKED BY:	SR
ISSUE DATE:	3/31/2022
BETA JOB NO.:	6050

SCALE

NONE

UNLESS OTHERWISE NOTED OR CHANGED BY REPRODUCTION

SHEET NO.

G-2.6

3/31/2022 9:58 AM J:\TAUNTON\WWTF DESIGN\AUTOCAD\PLAN SET\PHASE 2\WWTF PROCESS FLOW DIAGRAMS - PROP DWG (BETA STD BW.CTB)

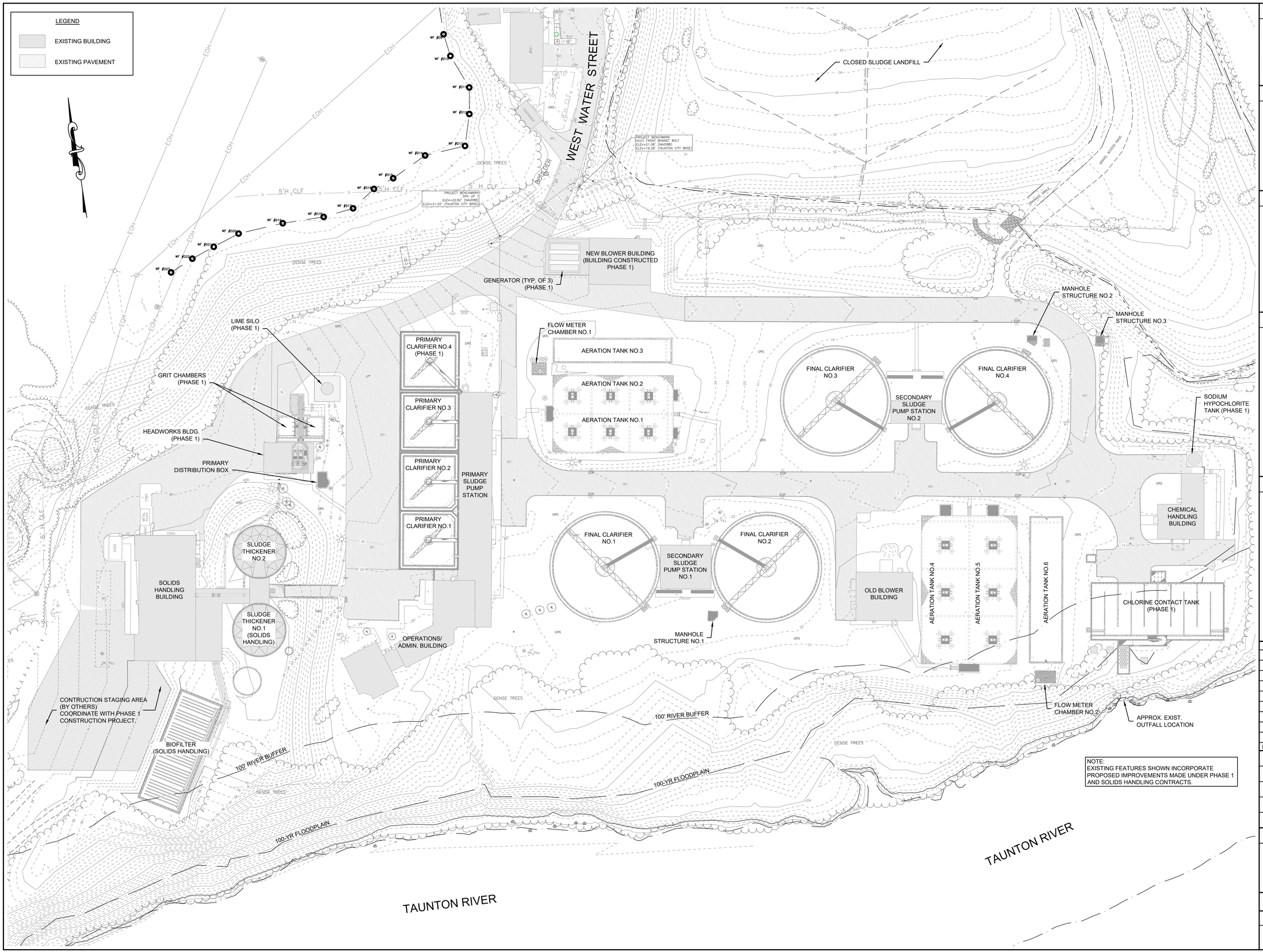

NOTE:
EXISTING FEATURES SHOWN INCORPORATE PROPOSED IMPROVEMENTS MADE UNDER PHASE 1 AND SOLIDS HANDLING CONTRACTS.

PREPARED BY

BETA
www.BETA-Inc.com

REGISTERED PROFESSIONAL

COMMONWEALTH OF MASSACHUSETTS
JOSEPH FEDERICO, JR.
No. 30663
REGISTERED PROFESSIONAL ENGINEER

SUBCONSULTANT

PROJECT

Taunton Wastewater Treatment Facility Improvements Phase 2

Taunton, MA

TITLE

WWTF Existing Site Plan

NO.	REVISIONS	DATE

DRAWN BY:	BM
DESIGNED BY:	BM
CHECKED BY:	SR
ISSUE DATE:	3/31/2022
BETA JOB NO.:	6050

SCALE

40 0 40 80
SCALE IN FEET: 1"=40'

UNLESS OTHERWISE NOTED OR CHANGED BY REPRODUCTION

SHEET NO.

C-1.1

3/31/2022 9:58 AM J:\TAUNTON\WWTF DESIGN\AUTOCAD\PLAN SET\PHASE 2\WWTF SITE PLAN - EXIST.DWG (BETA STD BW.CTB)

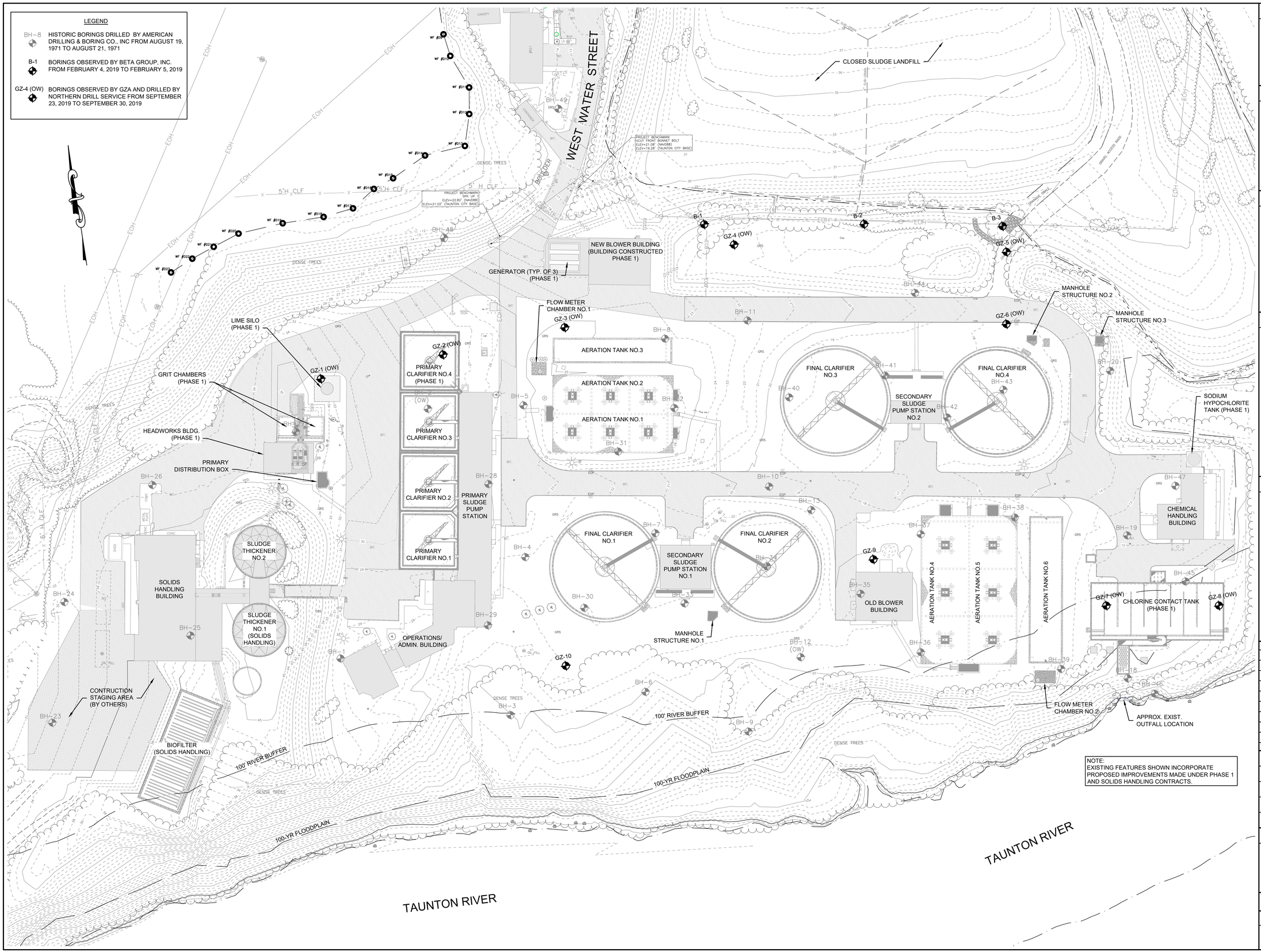

NOTE:
EXISTING FEATURES SHOWN INCORPORATE PROPOSED IMPROVEMENTS MADE UNDER PHASE 1 AND SOLIDS HANDLING CONTRACTS.

PREPARED BY

BETA
www.BETA-Inc.com

REGISTERED PROFESSIONAL

COMMONWEALTH OF MASSACHUSETTS
JOSEPH FEDERICO, JR.
No. 30663
REGISTERED PROFESSIONAL ENGINEER

SUBCONSULTANT

PROJECT

Taunton Wastewater Treatment Facility Improvements Phase 2

Taunton, MA

TITLE

WWTF Boring Location Plan

NO.	REVISIONS	DATE

DRAWN BY:	BM
DESIGNED BY:	BM
CHECKED BY:	SR
ISSUE DATE:	3/31/2022
BETA JOB NO.:	6050

SCALE

40 0 40 80
SCALE IN FEET: 1"=40'

UNLESS OTHERWISE NOTED OR CHANGED BY REPRODUCTION

SHEET NO.

C-1.2

3/31/2022 9:58 AM J:\TAUNTON\WWTF DESIGN\AUTOCAD\PLAN SET\PHASE 2\WWTF SITE PLAN - EXIST.DWG (BETA STD BW.CTB)

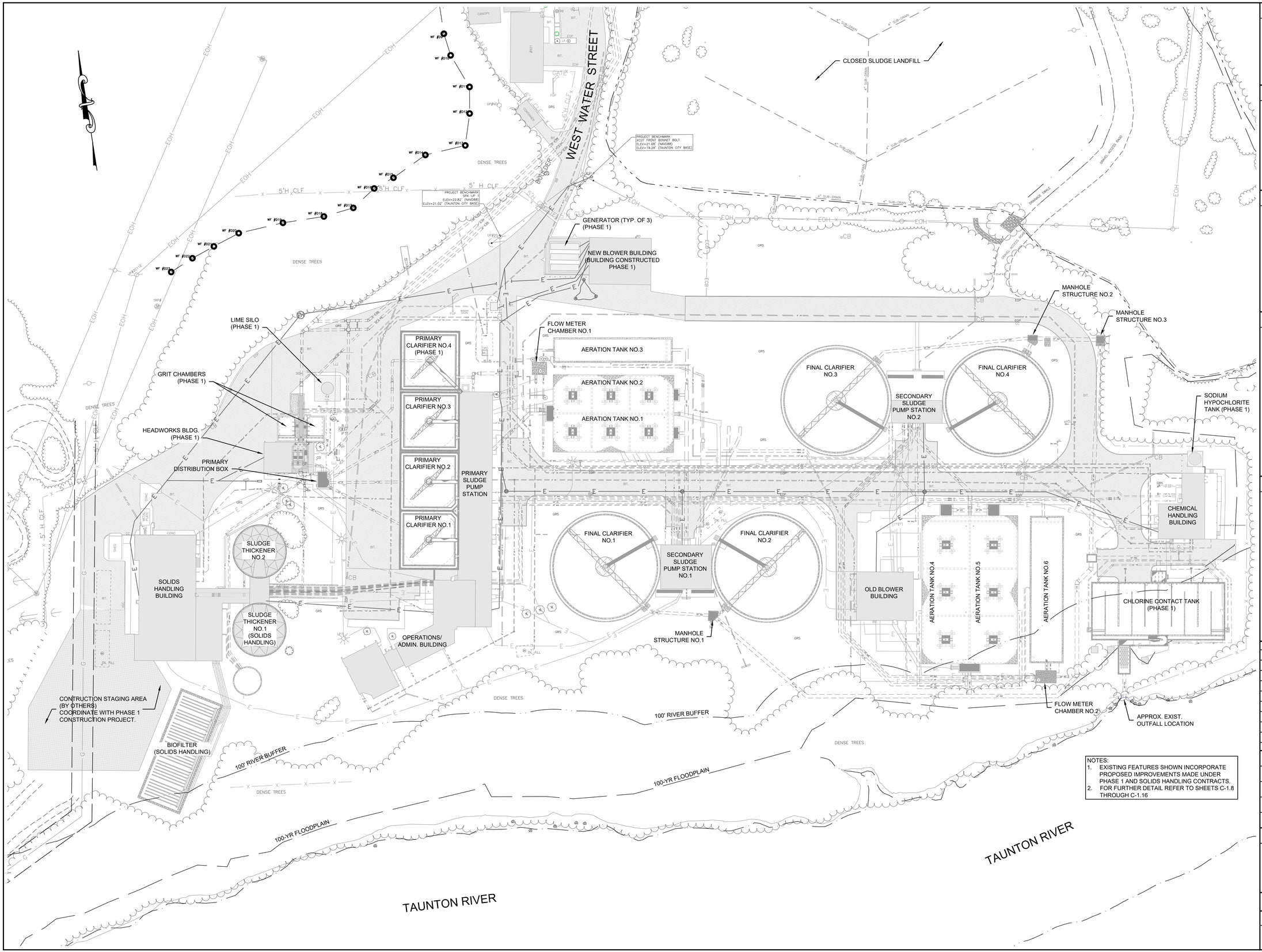

NOTES:
1. EXISTING FEATURES SHOWN INCORPORATE PROPOSED IMPROVEMENTS MADE UNDER PHASE 1 AND SOLIDS HANDLING CONTRACTS.
2. FOR FURTHER DETAIL REFER TO SHEETS C-1.8 THROUGH C-1.16

PREPARED BY

BETA
www.BETA-Inc.com

REGISTERED PROFESSIONAL

COMMONWEALTH OF MASSACHUSETTS
JOSEPH FEDERICO, JR.
No. 30663
REGISTERED PROFESSIONAL ENGINEER

SUBCONSULTANT

PROJECT

Taunton Wastewater Treatment Facility Improvements Phase 2

Taunton, MA

TITLE

WWTF Existing Yard Piping

NO.	REVISIONS	DATE

DRAWN BY:	BM
DESIGNED BY:	BM
CHECKED BY:	SR
ISSUE DATE:	3/31/2022
BETA JOB NO.:	6050

SCALE

40 0 40 80
SCALE IN FEET: 1"=40'

UNLESS OTHERWISE NOTED OR CHANGED BY REPRODUCTION

SHEET NO.

C-1.3

3/31/2022 9:59 AM J:\TAUNTON\WWTF DESIGN\AUTOCAD\PLAN SET\PHASE 2\WWTF YARD PIPING - EXIST DWG (BETA STD BW.CTB)

PLANT COORDINATE DATA			
DESCRIPTION	LOCATION	COORDINATES	ELEVATION
BENCHMARK	UTILITY POLE SPIKE	N 2779536.01, E 765815.13	21.02
BENCHMARK	HYDRANT BONNET BOLT	N 2779571.66, E 765897.89	19.28
GRIT CHAMBER NO.1	NORTHEAST CORNER SOUTHEAST CORNER	N 2779365.42, E 765620.25 N 2779390.25, E 765616.14	
LIME SILO FOUNDATION	SEE STRUCTURAL DRAWINGS	–	
PRIMARY CLARIFIER 1	CENTER OF TANK	N 2779255.79, E 765701.68	
PRIMARY CLARIFIER 2	CENTER OF TANK	N 2779311.57, E 765710.71	
PRIMARY CLARIFIER 3	CENTER OF TANK	N 2779369.32, E 765720.06	
PRIMARY CLARIFIER 4	SEE STRUCTURAL DRAWINGS	–	
AERATION TANK NO.1	SOUTHWEST CORNER SOUTHEAST CORNER	N 2779321.46, E 765833.64 N 2779302.85, E 765949.32	
AERATION TANK NO.3	NORTHEAST CORNER SOUTHEAST CORNER	N 2779413.29, E 765965.50 N 2779389.42, E 765961.76	
BLOWER BUILDING FOUNDATION	SEE STRUCTURAL DRAWINGS	–	
FINAL CLARIFIER NO.1	CENTER OF TANK	N 2779203.71, E 765866.65	
FINAL CLARIFIER NO.2	CENTER OF TANK	N 2779178.96, E 766021.68	
FINAL CLARIFIER NO.3	CENTER OF TANK	N 2779328.33, E 766112.97	
FINAL CLARIFIER NO.4	CENTER OF TANK	N 2779303.10, E 766267.93	
AERATION TANK NO.4	NORTHWEST CORNER SOUTHWEST CORNER	N 2779205.40, E 766178.14 N 2779063.02, E 766155.49	
AERATION TANK NO.6	NORTHWEST CORNER SOUTHWEST CORNER	N 2779188.50, E 766281.83 N 2779047.62, E 766259.35	
CHLORINE CONTACT TANK INFLUENT	NORTHWEST CORNER NORTHEAST CORNER	N 2779118.03, E 766389.45 N 2779115.64, E 766404.59	

LEGEND

- EXISTING BUILDING
- PROPOSED STRUCTURE
- FUTURE STRUCTURE
- EXISTING PAVEMENT

NOTE:
1. PRIOR TO CONSTRUCTION, THE CONTRACTOR SHALL VERIFY THE LAYOUT OF ALL STRUCTURES BY COORDINATES AND REPORT ANY DISCREPANCIES TO THE ENGINEER.
2. PHASE 2 CONTRACTOR SHALL COORDINATE FINAL BLOWER BUILDING AREA GRADING WITH PHASE 1 CONTRACTOR AND ENGINEER.

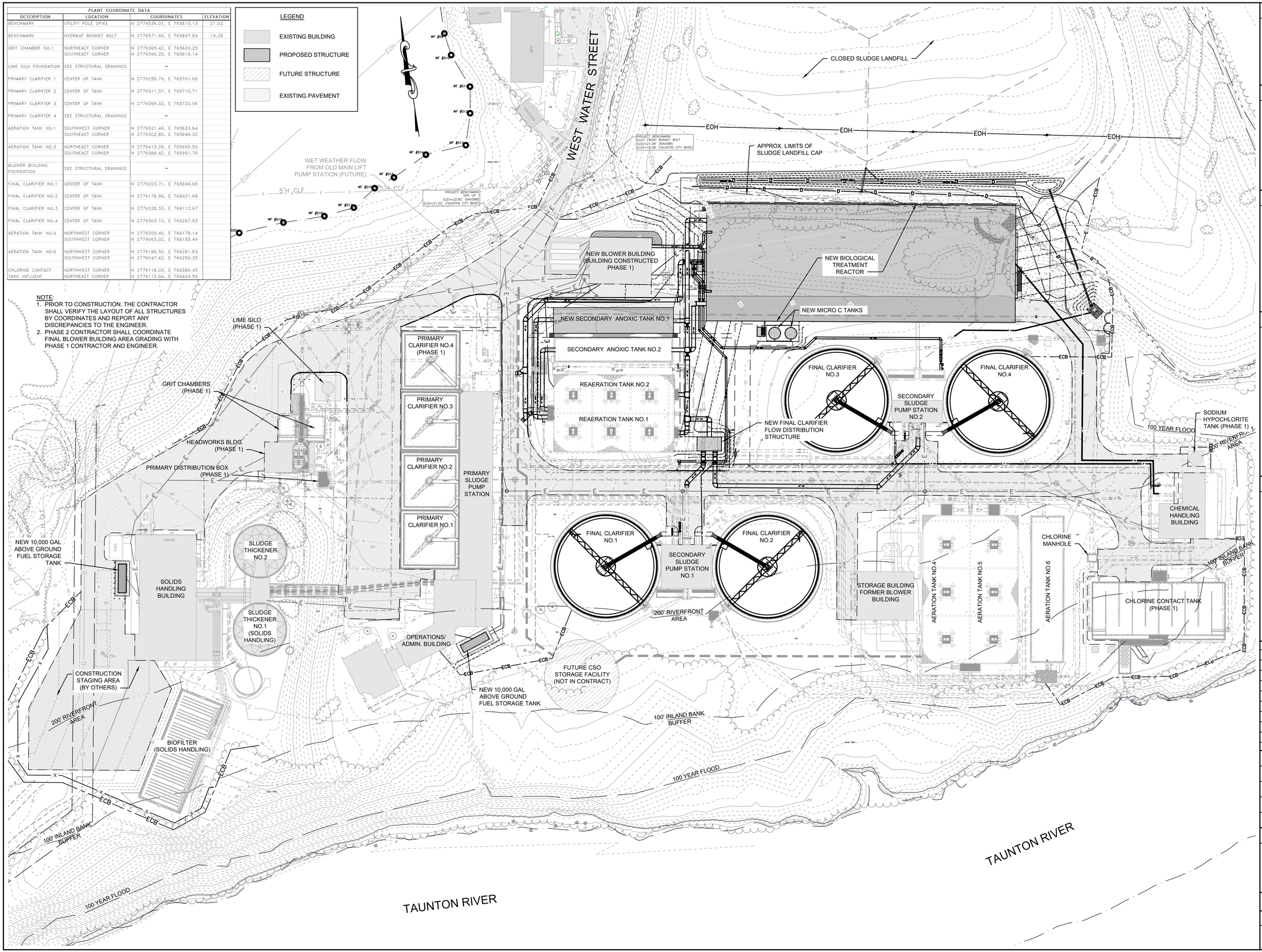

PREPARED BY

BETA
www.BETA-Inc.com

REGISTERED PROFESSIONAL

COMMONWEALTH OF MASSACHUSETTS
JOSEPH FEDERICO, JR.
No. 30663
REGISTERED PROFESSIONAL ENGINEER

SUBCONSULTANT

PROJECT

Taunton Wastewater Treatment Facility Improvements Phase 2

Taunton, MA

TITLE

WWTF Proposed Site Plan

NO.	REVISIONS	DATE

DRAWN BY:	BM
DESIGNED BY:	BM
CHECKED BY:	SR
ISSUE DATE:	3/31/2022
BETA JOB NO.:	6050

SCALE

40 0 40 80
SCALE IN FEET: 1"=40'

UNLESS OTHERWISE NOTED OR CHANGED BY REPRODUCTION

SHEET NO.

C-1.4

3/31/2022 9:59 AM J:\TAUNTON\WWTF DESIGN\AUTOCAD\PLAN SET\PHASE 2\WWTF PROP SITE PLAN - PHASE 2.DWG (BETA STD BW.CTB)

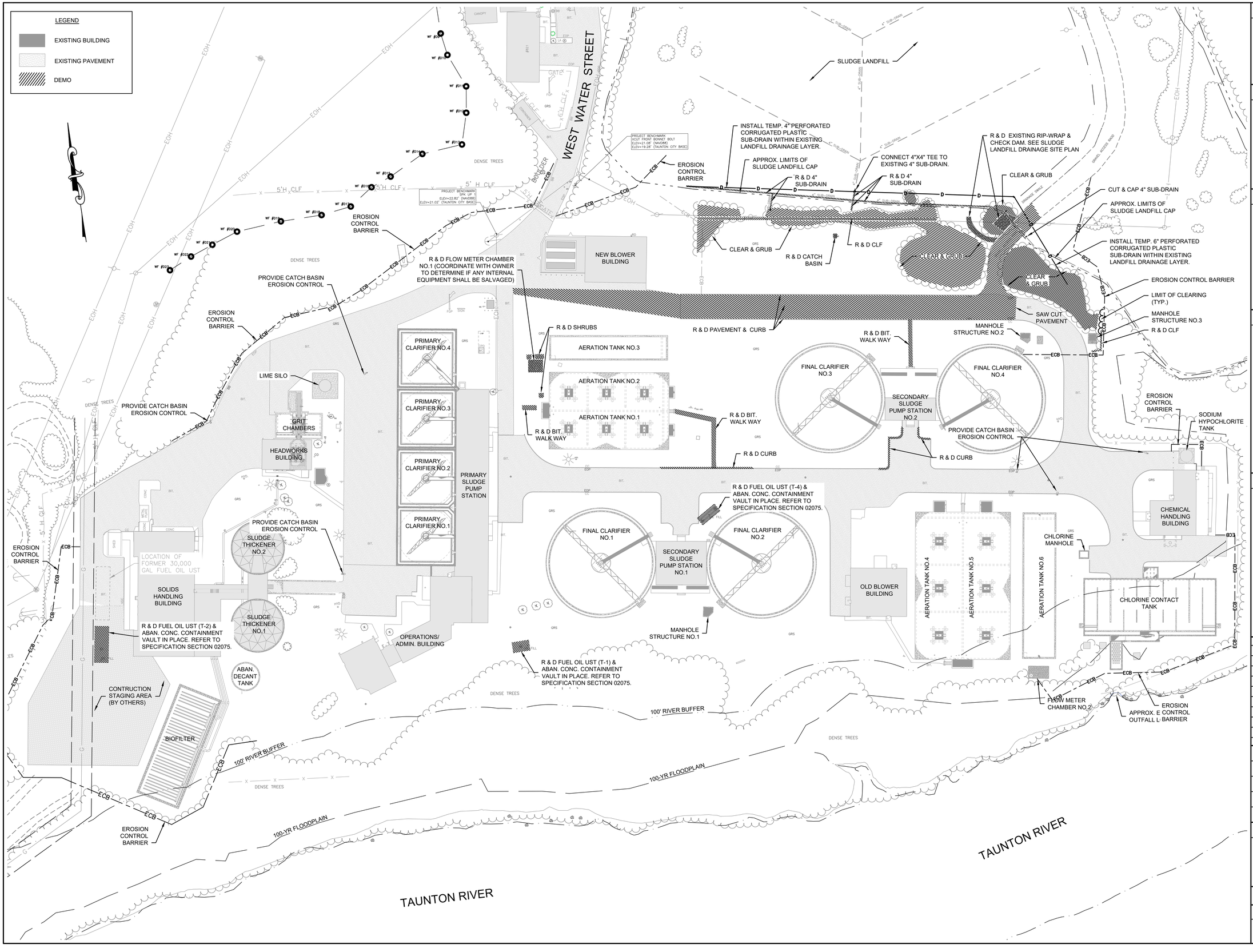

PREPARED BY

BETA
www.BETA-Inc.com

REGISTERED PROFESSIONAL

COMMONWEALTH OF MASSACHUSETTS
JOSEPH FEDERICO, JR.
No. 30663
REGISTERED PROFESSIONAL ENGINEER

SUBCONSULTANT

PROJECT

Taunton Wastewater Treatment Facility Improvements Phase 2

Taunton, MA

TITLE

WWTF Site Preparation & Demolition Plan

NO.	REVISIONS	DATE

DRAWN BY:	BM
DESIGNED BY:	BM
CHECKED BY:	SR
ISSUE DATE:	3/31/2022
BETA JOB NO.:	6050

SCALE

40 0 40 80
SCALE IN FEET: 1"=40'

UNLESS OTHERWISE NOTED OR CHANGED BY REPRODUCTION

SHEET NO.

C-1.5

3/31/2022 11:16 AM J:\TAUNTON\WWTF DESIGN\AUTOCAD\PLAN SET\PHASE 2\WWTF SITE PLAN - DEMO.DWG (BETA STB BW STB)

LEGEND

EXISTING PAVEMENT

PROPOSED PAVEMENT

NOTES:

1. REMOVE AND DISPOSE EXISTING PAVEMENT.
2. PROVIDE 2.5-INCHES OF BITUMINOUS BINDER COURSE WITH 1.5 INCHES OF SURFACE COURSE OVER 12-INCHES OF GRAVEL BASE COURSE (M1.03.0 TYPE B).

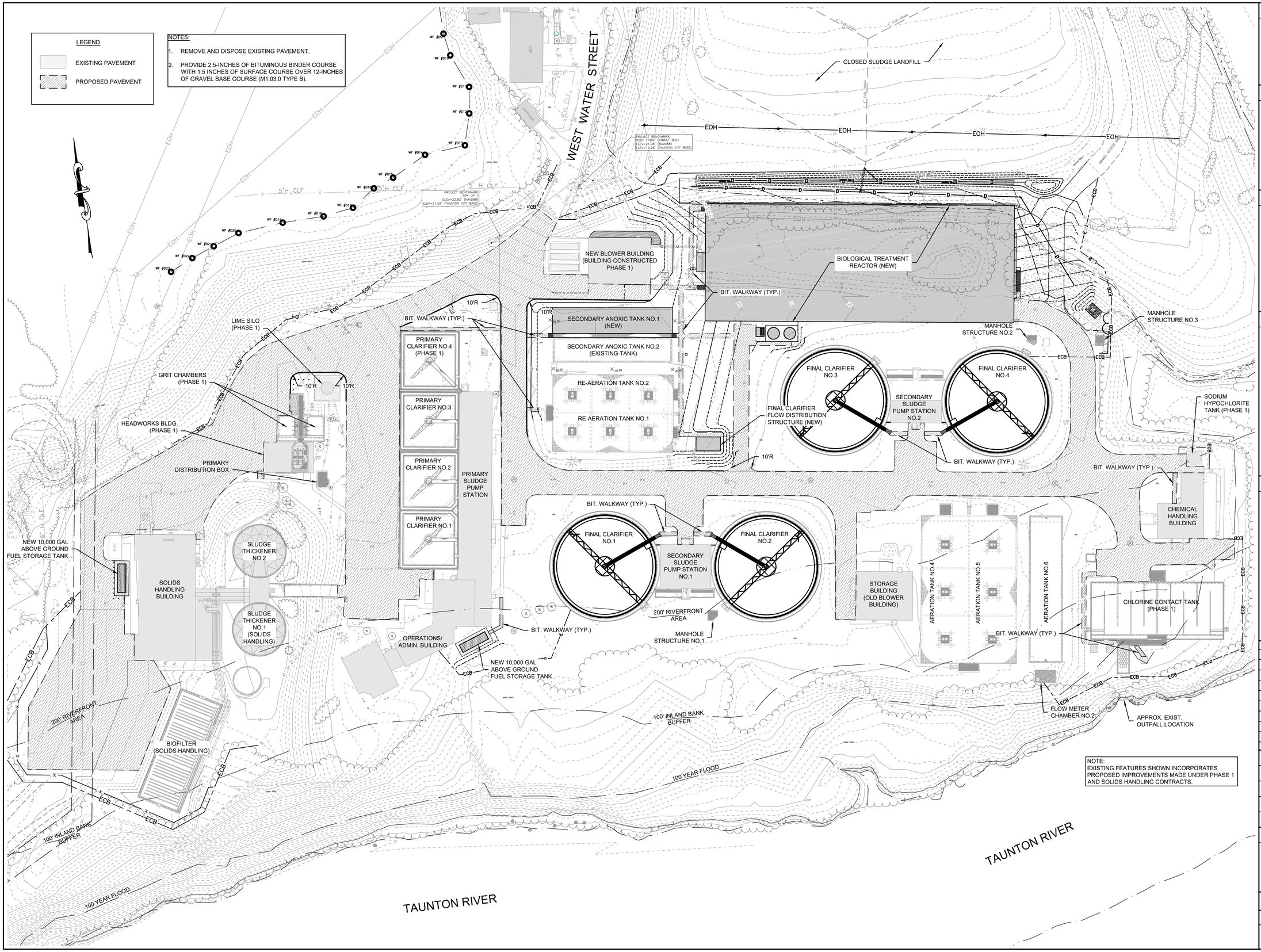

NOTE:
EXISTING FEATURES SHOWN INCORPORATES PROPOSED IMPROVEMENTS MADE UNDER PHASE 1 AND SOLIDS HANDLING CONTRACTS.

PREPARED BY

BETA
www.BETA-Inc.com

REGISTERED PROFESSIONAL

COMMONWEALTH OF MASSACHUSETTS
JOSEPH FEDERICO, JR.
No. 30663
REGISTERED PROFESSIONAL ENGINEER

SUBCONSULTANT

PROJECT

Taunton Wastewater Treatment Facility Improvements Phase 2

Taunton, MA

TITLE

WWTF Paving Site Plan

NO.	REVISIONS	DATE

DRAWN BY:	BM
DESIGNED BY:	BM
CHECKED BY:	SR
ISSUE DATE:	3/31/2022
BETA JOB NO.:	6050

SCALE

40 0 40 80

SCALE IN FEET: 1"=40'

UNLESS OTHERWISE NOTED OR CHANGED BY REPRODUCTION

SHEET NO.

C-1.6

3/31/2022 10:00 AM J:\TAUNTON\WWTF DESIGN\AUTOCAD\PLAN SET\PHASE 2\WWTF PROP SITE PLAN - PHASE 2.DWG (BETA STD BW.CTB)

LEGEND

EXISTING PAVEMENT

PROPOSED PAVEMENT

NOTE:

ALL PROPOSED PAVEMENT MARKINGS SHALL BE PAINT IN CONFORMANCE WITH SUBSECTION 860 AND SECTION M7 OF THE MASSACHUSETTS DEPARTMENT OF TRANSPORTATION STANDARD SPECIFICATIONS FOR HIGHWAYS AND BRIDGES DATED 2022

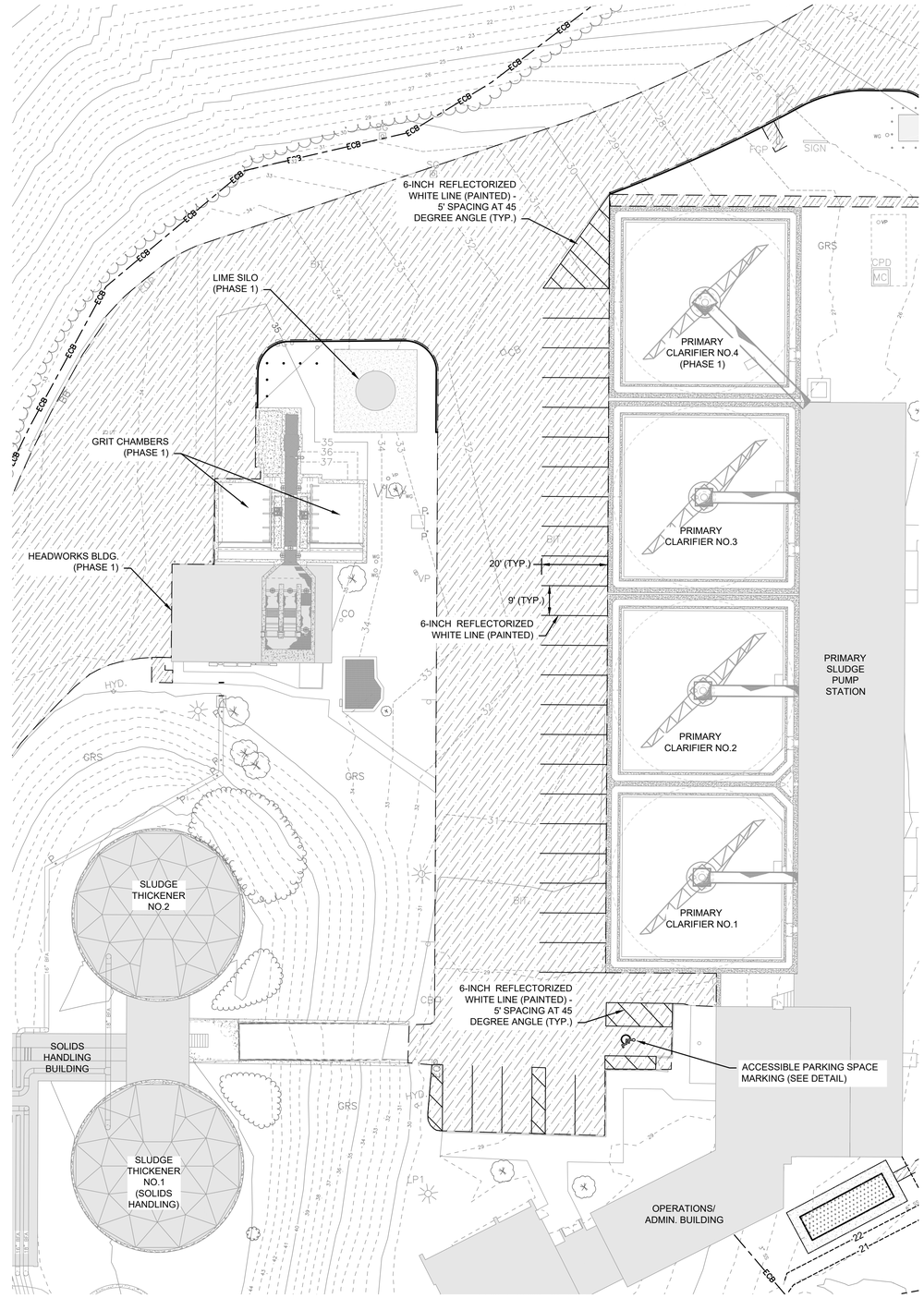

NOTES:
1. SYMBOL SHALL BE CENTERED IN THE PARKING STALL.
2. PAVEMENT MARKINGS TO BE INSTALLED IN LOCATIONS SHOWN ON THE PLANS.

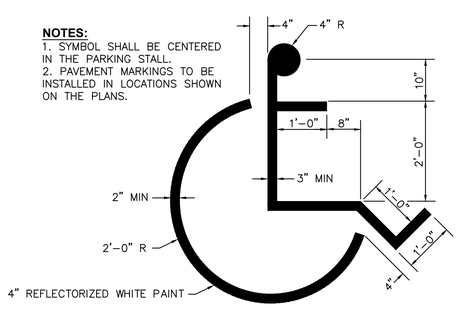

ACCESSIBLE PARKING SPACE MARKING

NOT TO SCALE

PREPARED BY

BETA
www.BETA-Inc.com

REGISTERED PROFESSIONAL

COMMONWEALTH OF MASSACHUSETTS
JOSEPH FEDERICO, JR.
No. 30663
REGISTERED PROFESSIONAL ENGINEER

SUBCONSULTANT

PROJECT

Taunton Wastewater Treatment Facility Improvements Phase 2

Taunton, MA

TITLE

WWTF Pavement Striping Plan

NO.	REVISIONS	DATE

DRAWN BY:	BM
DESIGNED BY:	BM
CHECKED BY:	SR
ISSUE DATE:	3/31/2022
BETA JOB NO.:	6050

SCALE

20 0 20 40

SCALE IN FEET: 1"=20'

UNLESS OTHERWISE NOTED OR CHANGED BY REPRODUCTION

SHEET NO.

C-1.7

3/31/2022 10:00 AM J:\TAUNTON\WWTF DESIGN\AUTOCAD\PLAN SET\PHASE 2\WWTF PROP SITE PLAN - PHASE 2.DWG (BETA STD BW.CTB)

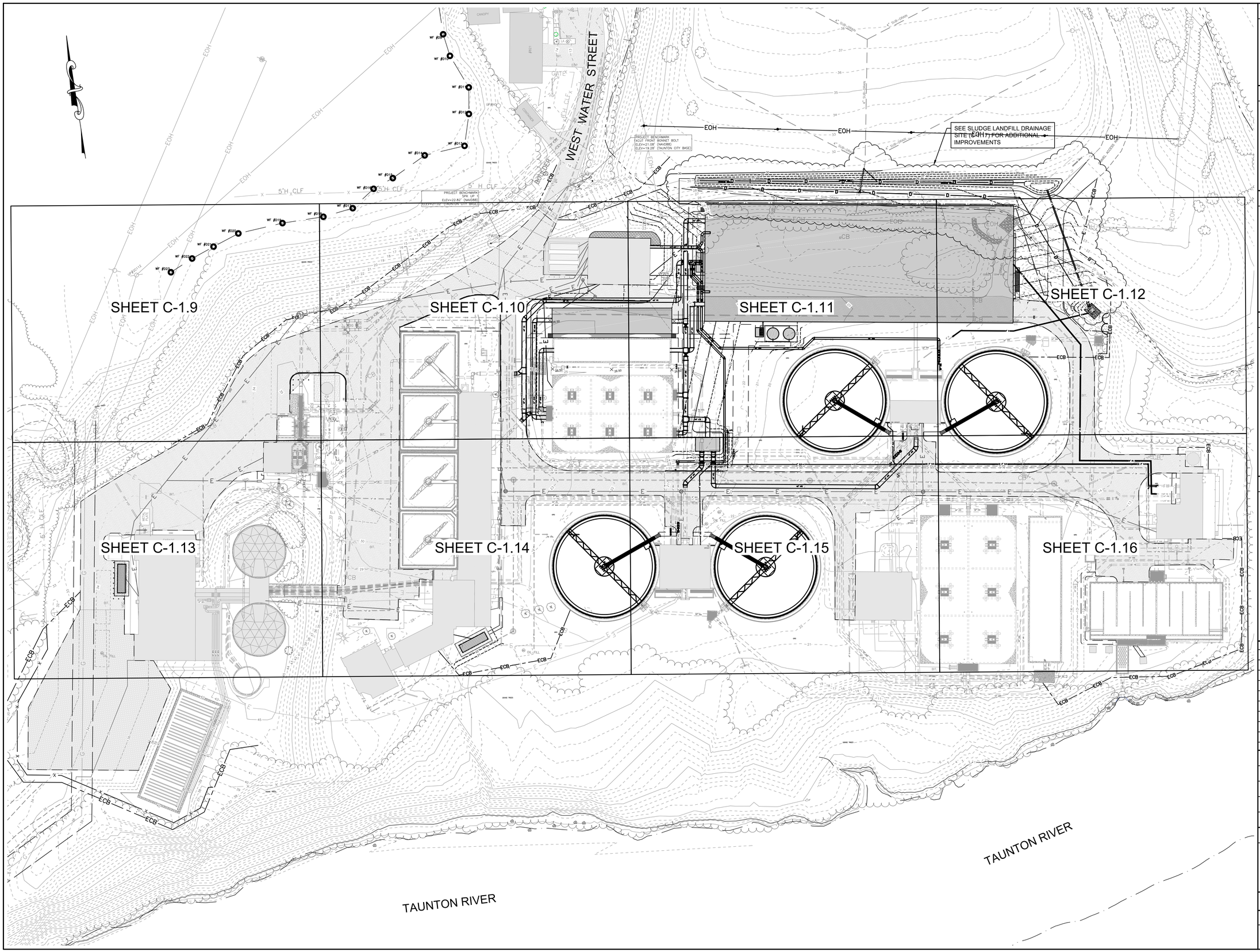

PREPARED BY

BETA
www.BETA-Inc.com

REGISTERED PROFESSIONAL

COMMONWEALTH OF MASSACHUSETTS
JOSEPH FEDERICO, JR.
No. 30663
REGISTERED PROFESSIONAL ENGINEER

SUBCONSULTANT

PROJECT

Taunton Wastewater Treatment Facility Improvements Phase 2

Taunton, MA

TITLE

Yard Piping Plan Index

NO.	REVISIONS	DATE

DRAWN BY:	BM
DESIGNED BY:	BM
CHECKED BY:	SR
ISSUE DATE:	3/31/2022
BETA JOB NO.:	6050

SCALE

40 0 40 80
SCALE IN FEET: 1"=40'

UNLESS OTHERWISE NOTED OR CHANGED BY REPRODUCTION

SHEET NO.

C-1.8

3/31/2022 10:00 AM J:\TAUNTON\WWTF DESIGN\AUTOCAD\PLAN SET\PHASE 2\WWTF YARD PIPING - PROP.DWG (BETA STD BW.CTB)

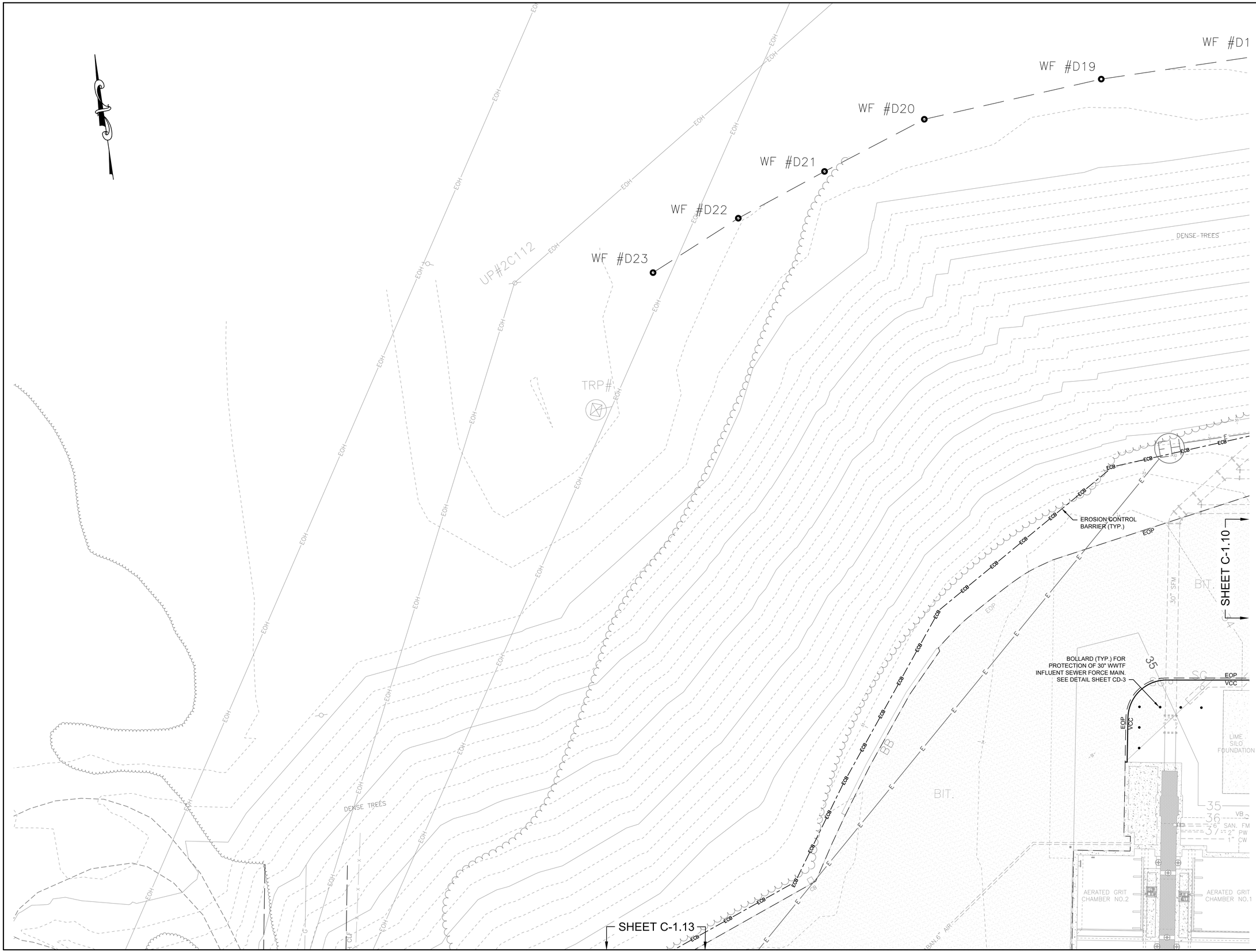

PREPARED BY

BETA
www.BETA-Inc.com

REGISTERED PROFESSIONAL

COMMONWEALTH OF MASSACHUSETTS
JOSEPH FEDERICO, JR.
No. 30663
REGISTERED PROFESSIONAL ENGINEER

SUBCONSULTANT

PROJECT

Taunton Wastewater Treatment Facility Improvements Phase 2

Taunton, MA

TITLE

Yard Piping Plan I

NO.	REVISIONS	DATE

DRAWN BY:	BM
DESIGNED BY:	BM
CHECKED BY:	SR
ISSUE DATE:	3/31/2022
BETA JOB NO.:	6050

SCALE

10 0 10 20
SCALE IN FEET: 1"=10'

UNLESS OTHERWISE NOTED OR CHANGED BY REPRODUCTION

SHEET NO.

C-1.9

3/31/2022 10:00 AM J:\TAUNTON\WWTF DESIGN\AUTOCAD\PLAN SET\PHASE 2\WWTF YARD PIPING - PROP.DWG (BETA STD BW.CTB)

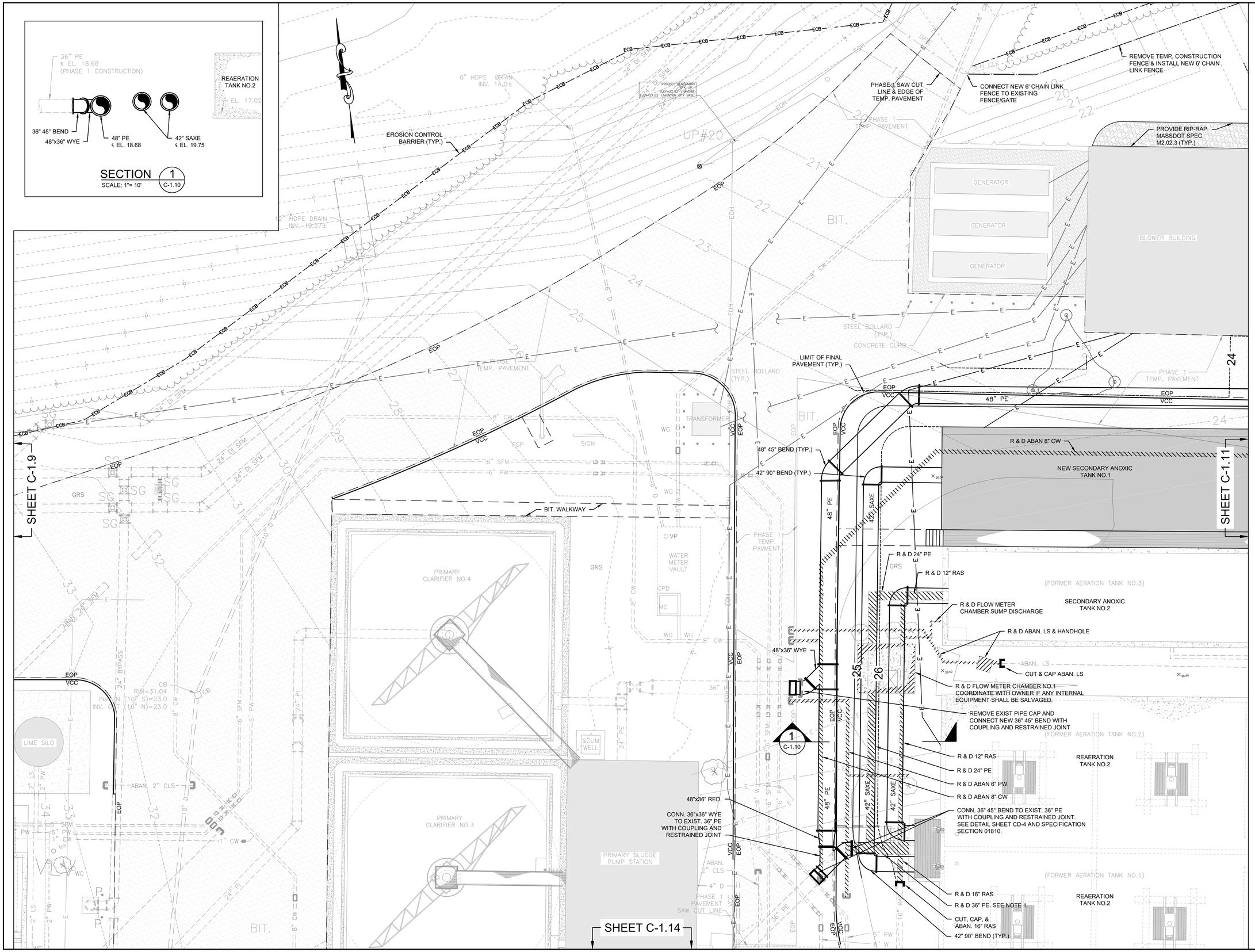

PREPARED BY

BETA
www.BETA-Inc.com

REGISTERED PROFESSIONAL

COMMONWEALTH OF MASSACHUSETTS
JOSEPH FEDERICO, JR.
No. 30663
REGISTERED PROFESSIONAL ENGINEER

SUBCONSULTANT

PROJECT

Taunton Wastewater Treatment Facility Improvements Phase 2

Taunton, MA

TITLE

Yard Piping Plan II

NO.	REVISIONS	DATE

DRAWN BY:	BM
DESIGNED BY:	BM
CHECKED BY:	SR
ISSUE DATE:	3/31/2022
BETA JOB NO.:	6050

SCALE

10 0 10 20
SCALE IN FEET: 1"=10'

UNLESS OTHERWISE NOTED OR CHANGED BY REPRODUCTION

SHEET NO.

C-1.10

3/31/2022 10:01 AM J:\TAUNTON\WWTF DESIGN\AUTOCAD\PLAN SET\PHASE 2\WWTF YARD PIPING - PROP.DWG (BETA STD BW.CTB)

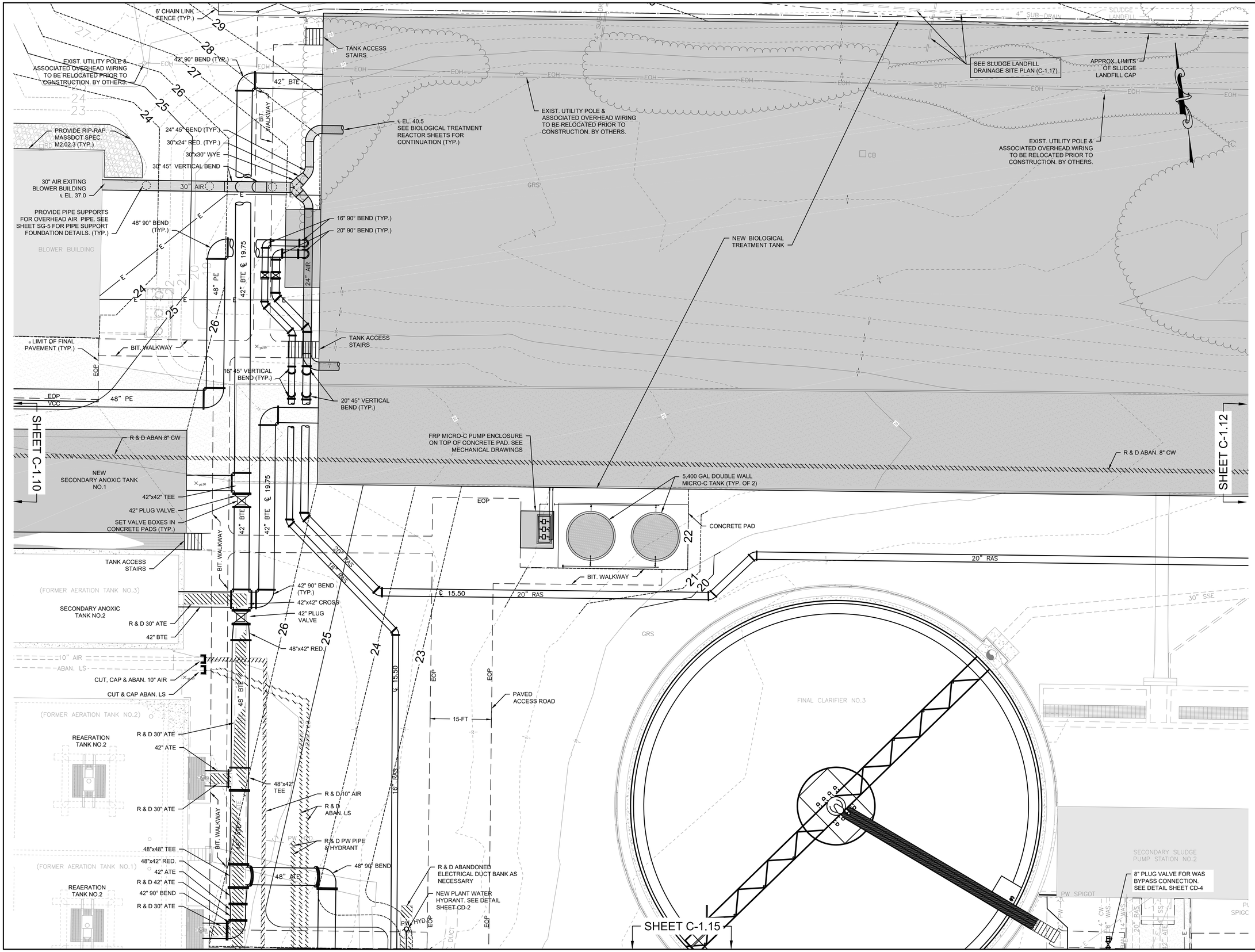

PREPARED BY

BETA
www.BETA-Inc.com

REGISTERED PROFESSIONAL

COMMONWEALTH OF MASSACHUSETTS
JOSEPH FEDERICO, JR.
No. 30663
REGISTERED PROFESSIONAL ENGINEER

SUBCONSULTANT

PROJECT

Taunton Wastewater Treatment Facility Improvements Phase 2

Taunton, MA

TITLE

Yard Piping Plan
III

NO.	REVISIONS	DATE

DRAWN BY:	BM
DESIGNED BY:	BM
CHECKED BY:	SR
ISSUE DATE:	3/31/2022
BETA JOB NO.:	6050

SCALE

10 0 10 20
SCALE IN FEET: 1"=10'

UNLESS OTHERWISE NOTED OR CHANGED BY REPRODUCTION

SHEET NO.

C-1.11

3/31/2022 10:01 AM J:\TAUNTON\WWTF DESIGN\AUTOCAD\PLAN SET\PHASE 2\WWTF YARD PIPING - PROP.DWG (BETA STD BW.CTB)

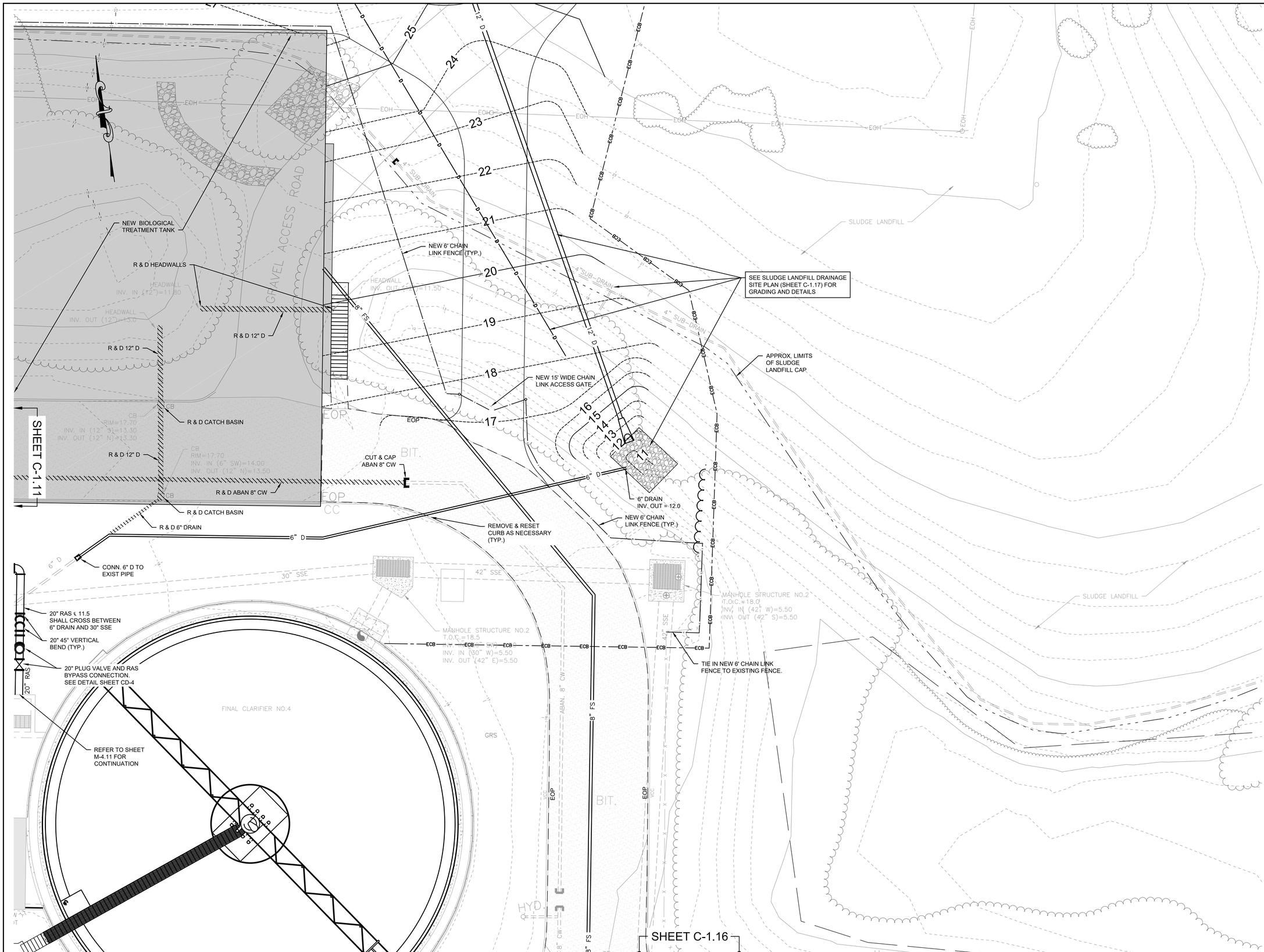

PREPARED BY

BETA
www.BETA-Inc.com

REGISTERED PROFESSIONAL

COMMONWEALTH OF MASSACHUSETTS
JOSEPH FEDERICO, JR.
No. 30663
REGISTERED PROFESSIONAL ENGINEER

SUBCONSULTANT

PROJECT

Taunton Wastewater Treatment Facility Improvements Phase 2

Taunton, MA

TITLE

Yard Piping Plan IV

NO.	REVISIONS	DATE

DRAWN BY:	BM
DESIGNED BY:	BM
CHECKED BY:	SR
ISSUE DATE:	3/31/2022
BETA JOB NO.:	6050

SCALE

10 0 10 20
SCALE IN FEET: 1"=10'

UNLESS OTHERWISE NOTED OR CHANGED BY REPRODUCTION

SHEET NO.

C-1.12

3/31/2022 10:01 AM J:\TAUNTON\WWTF DESIGN\AUTOCAD\PLAN SET\PHASE 2\WWTF YARD PIPING - PROP.DWG (BETA STD BW.CTB)

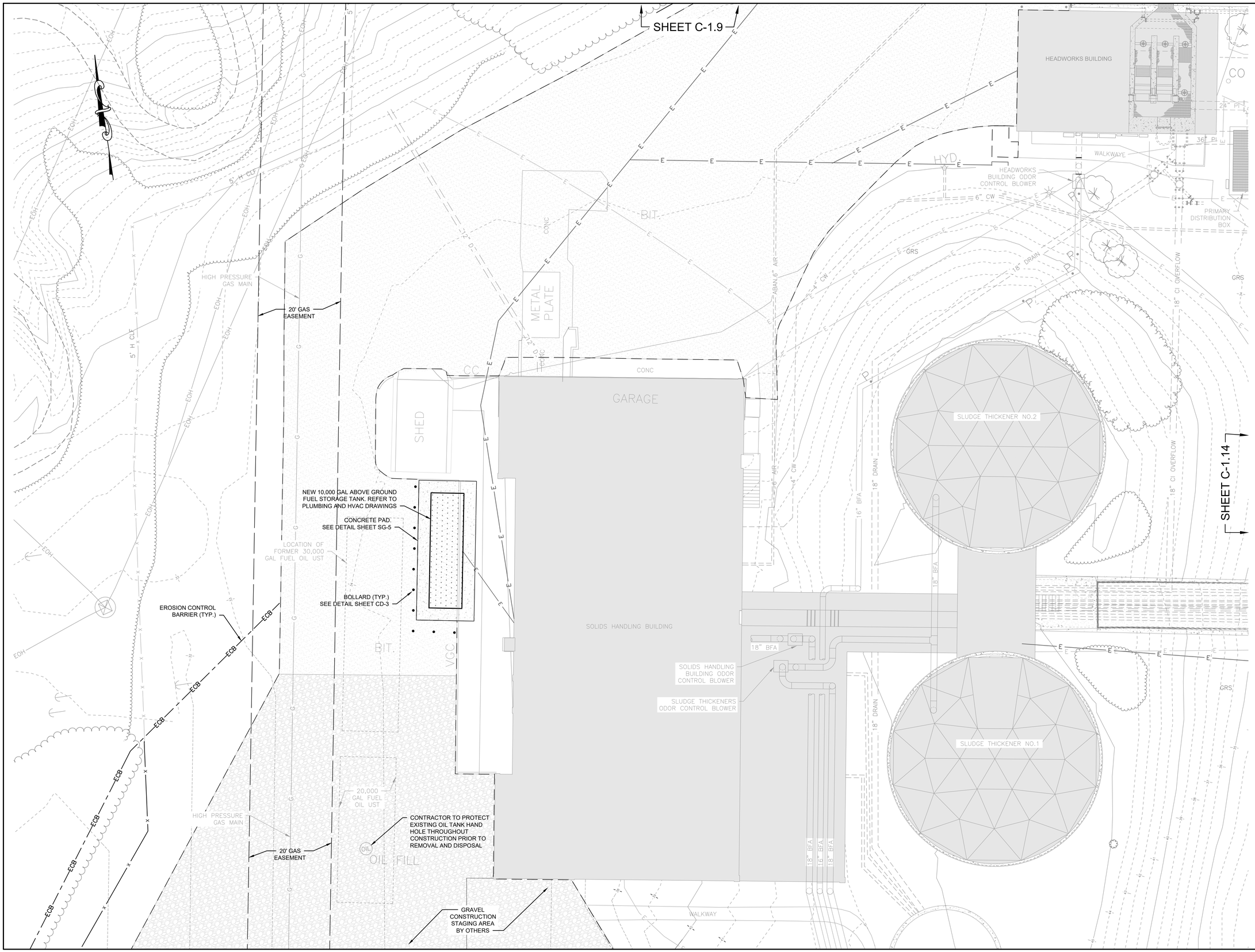

PREPARED BY

BETA
www.BETA-Inc.com

REGISTERED PROFESSIONAL

COMMONWEALTH OF MASSACHUSETTS
JOSEPH FEDERICO, JR.
No. 30663
REGISTERED PROFESSIONAL ENGINEER

SUBCONSULTANT

PROJECT

Taunton Wastewater Treatment Facility Improvements Phase 2

Taunton, MA

TITLE

Yard Piping Plan V

NO.	REVISIONS	DATE

DRAWN BY:	BM
DESIGNED BY:	BM
CHECKED BY:	SR
ISSUE DATE:	3/31/2022
BETA JOB NO.:	6050

SCALE

10 0 10 20
SCALE IN FEET: 1"=10'

UNLESS OTHERWISE NOTED OR CHANGED BY REPRODUCTION

SHEET NO.

C-1.13

3/31/2022 10:01 AM J:\TAUNTON\WWTF DESIGN\AUTOCAD\PLAN SET\PHASE 2\WWTF YARD PIPING - PROP.DWG (BETA STD BW.CTB)

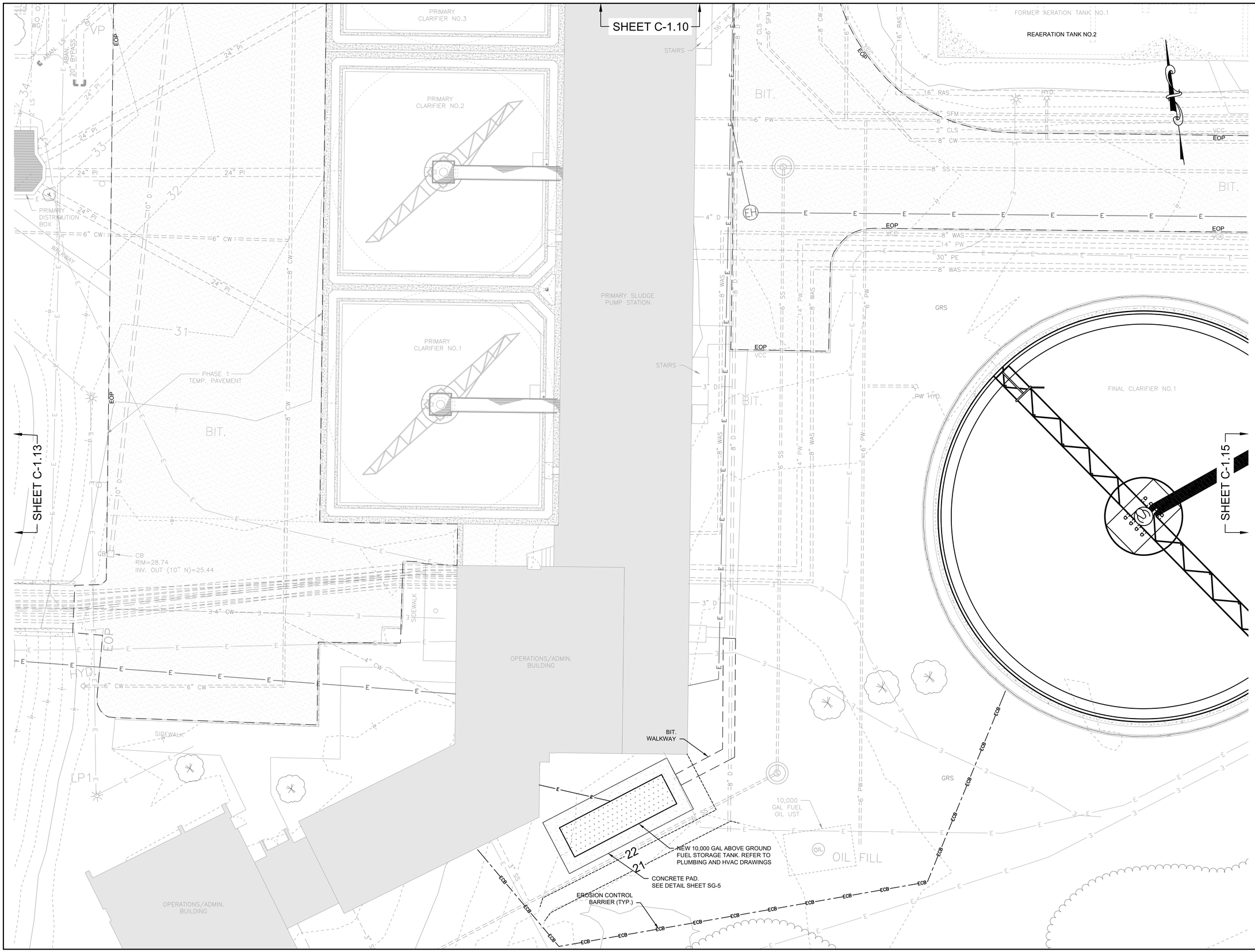

PREPARED BY

BETA
www.BETA-Inc.com

REGISTERED PROFESSIONAL

COMMONWEALTH OF MASSACHUSETTS
JOSEPH FEDERICO, JR.
No. 30663
REGISTERED PROFESSIONAL ENGINEER

SUBCONSULTANT

PROJECT

Taunton Wastewater Treatment Facility Improvements Phase 2

Taunton, MA

TITLE

Yard Piping Plan VI

NO.	REVISIONS	DATE

DRAWN BY:	BM
DESIGNED BY:	BM
CHECKED BY:	SR
ISSUE DATE:	3/31/2022
BETA JOB NO.:	6050

SCALE

10 0 10 20
SCALE IN FEET: 1"=10'

UNLESS OTHERWISE NOTED OR CHANGED BY REPRODUCTION

SHEET NO.

C-1.14

3/31/2022 10:01 AM J:\TAUNTON\WWTF DESIGN\AUTOCAD\PLAN SET\PHASE 2\WWTF YARD PIPING - PROP.DWG (BETA STD BW.CTB)

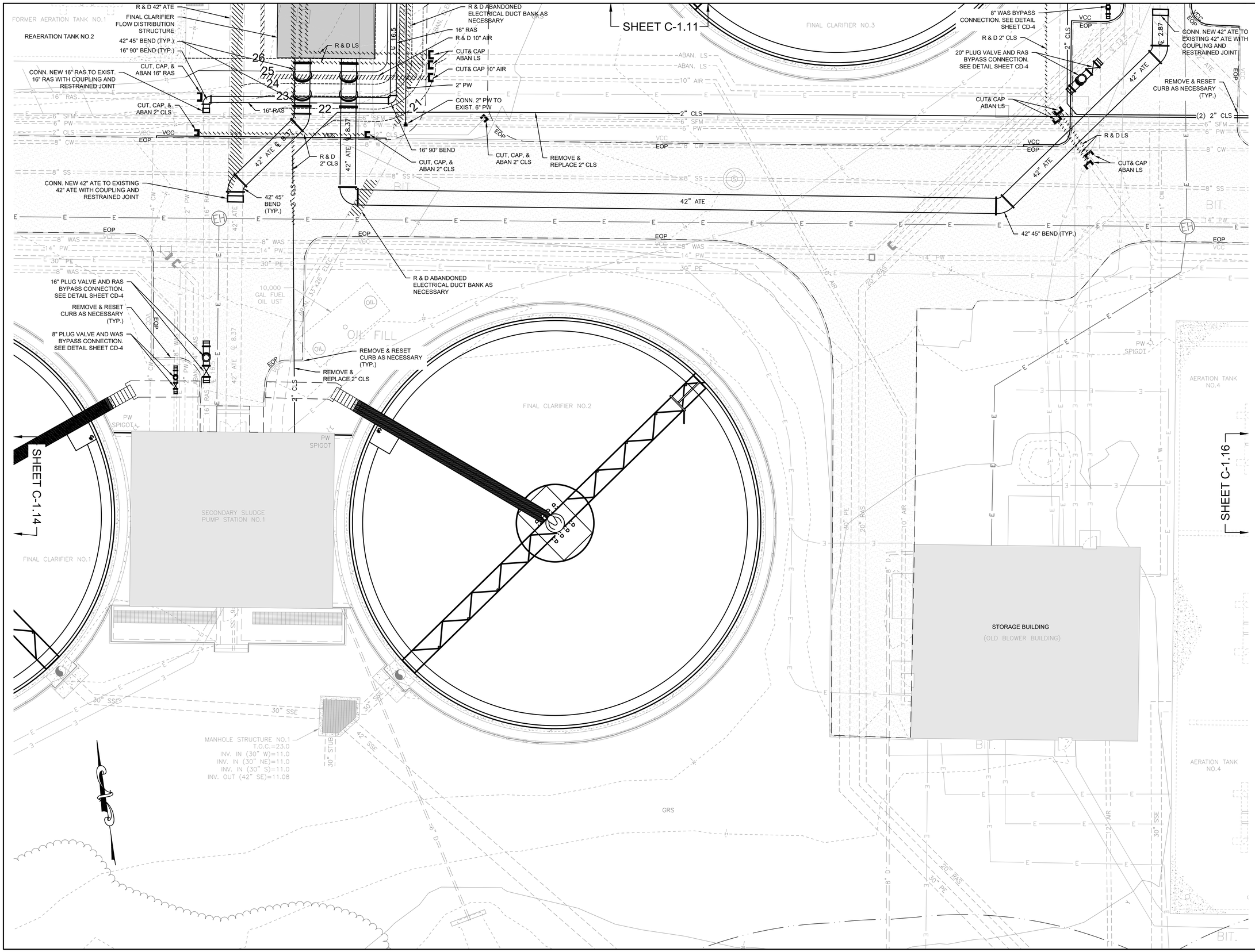

PREPARED BY

BETA
www.BETA-Inc.com

REGISTERED PROFESSIONAL

COMMONWEALTH OF MASSACHUSETTS
JOSEPH FEDERICO, JR.
No. 30663
REGISTERED PROFESSIONAL ENGINEER

SUBCONSULTANT

PROJECT

Taunton Wastewater Treatment Facility Improvements Phase 2

Taunton, MA

TITLE

Yard Piping Plan
VII

NO.	REVISIONS	DATE

DRAWN BY:	BM
DESIGNED BY:	BM
CHECKED BY:	SR
ISSUE DATE:	3/31/2022
BETA JOB NO.:	6050

SCALE

10 0 10 20
SCALE IN FEET: 1"=10'

UNLESS OTHERWISE NOTED OR CHANGED BY REPRODUCTION

SHEET NO.

C-1.15

3/31/2022 11:13 AM J:\TAUNTON\WWTF DESIGN\AUTOCAD\PLAN SET\PHASE 2\WWTF YARD PIPING - PROP DWG (BETA STB BW STB)

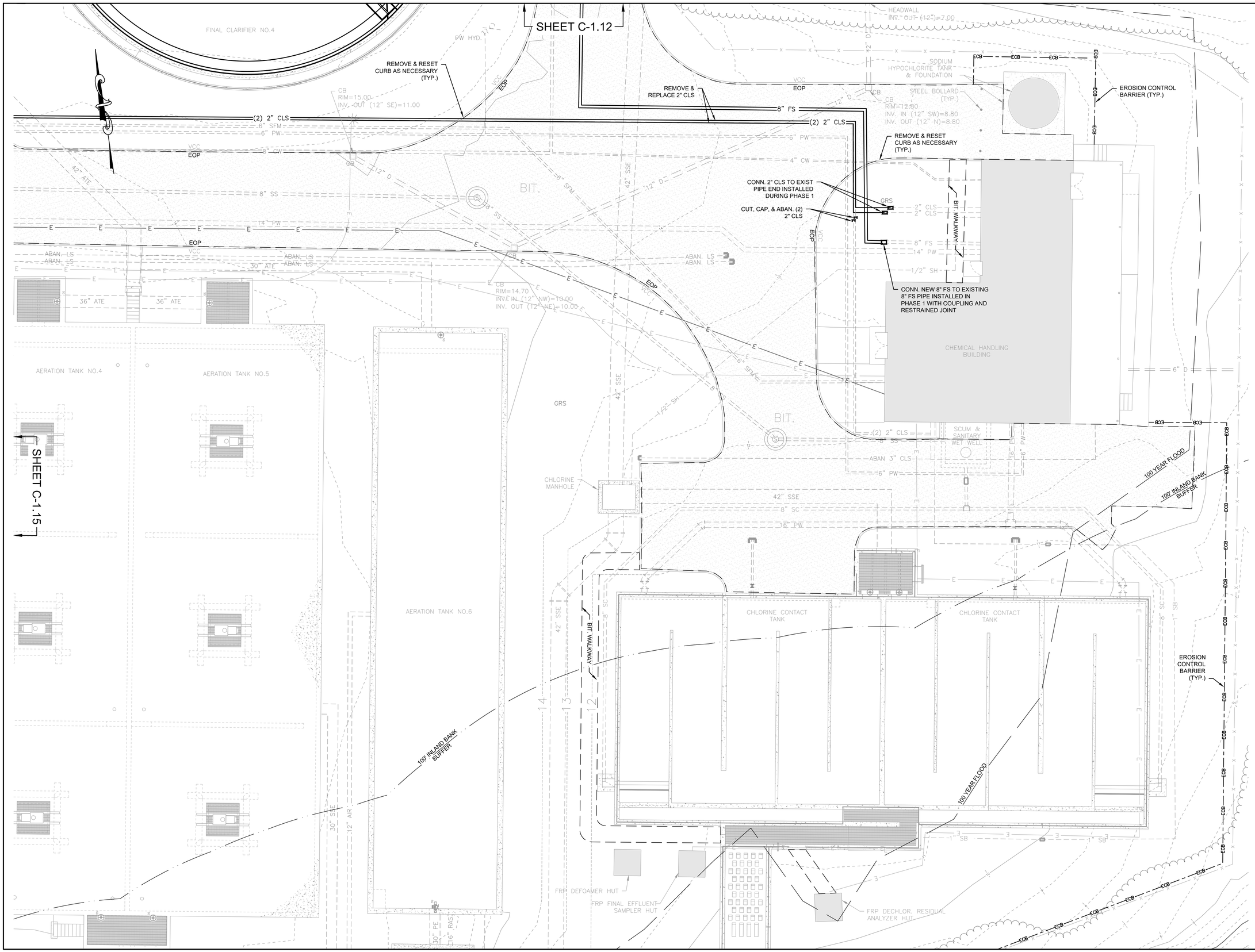

PREPARED BY

BETA
www.BETA-Inc.com

REGISTERED PROFESSIONAL

COMMONWEALTH OF MASSACHUSETTS
JOSEPH FEDERICO, JR.
No. 30663
REGISTERED PROFESSIONAL ENGINEER

SUBCONSULTANT

PROJECT

Taunton Wastewater Treatment Facility Improvements Phase 2

Taunton, MA

TITLE

Yard Piping Plan VIII

NO.	REVISIONS	DATE

DRAWN BY:	BM
DESIGNED BY:	BM
CHECKED BY:	SR
ISSUE DATE:	3/31/2022
BETA JOB NO.:	6050

SCALE

10 0 10 20
SCALE IN FEET: 1"=10'

UNLESS OTHERWISE NOTED OR CHANGED BY REPRODUCTION

SHEET NO.

C-1.16

3/31/2022 10:02 AM J:\TAUNTON\WWTF DESIGN\AUTOCAD\PLAN SET\PHASE 2\WWTF YARD PIPING - PROP.DWG (BETA STD BW.CTB)

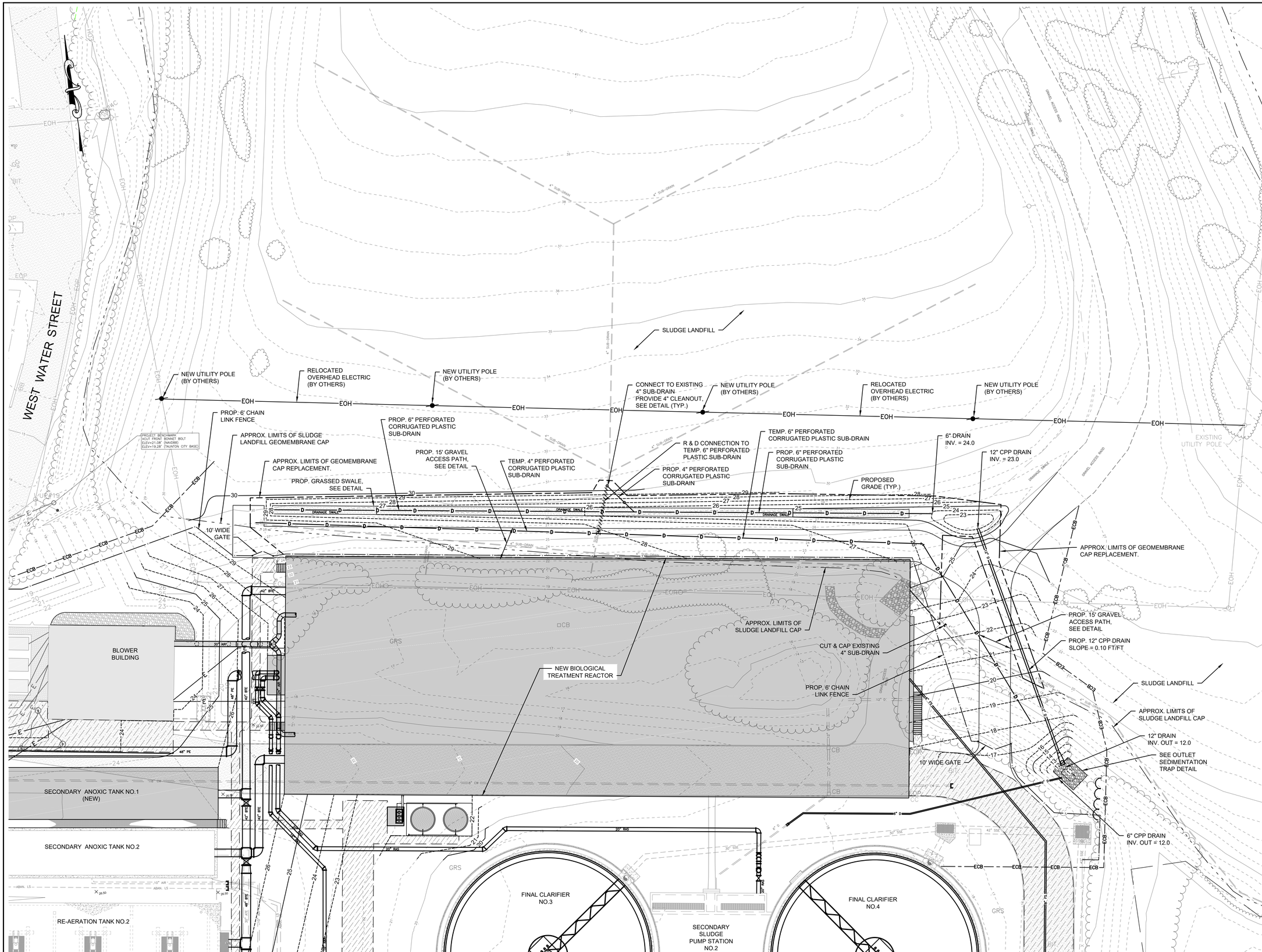

PREPARED BY

BETA
www.BETA-Inc.com

REGISTERED PROFESSIONAL

COMMONWEALTH OF MASSACHUSETTS
JOSEPH FEDERICO, JR.
No. 30663
REGISTERED PROFESSIONAL ENGINEER

SUBCONSULTANT

PROJECT

Taunton Wastewater Treatment Facility Improvements Phase 2

Taunton, MA

TITLE

Sludge Landfill Drainage Site Plan

NO.	REVISIONS	DATE

DRAWN BY:	BM
DESIGNED BY:	BM
CHECKED BY:	SR
ISSUE DATE:	3/31/2022
BETA JOB NO.:	6050

SCALE

20 0 20 40
SCALE IN FEET: 1"=20'

UNLESS OTHERWISE NOTED OR CHANGED BY REPRODUCTION

SHEET NO.

C-1.17

3/31/2022 10:02 AM J:\TAUNTON\WWTF DESIGN\AUTOCAD\PLAN SET\PHASE 2\SLUDGE LANDFILL - PROP SITE PLAN & DETAILS.DWG (BETA STD BW.CTB)

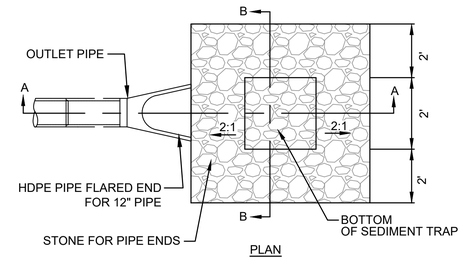

PLAN

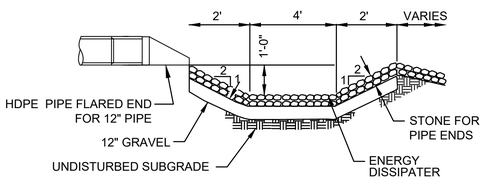

SECTION A-A

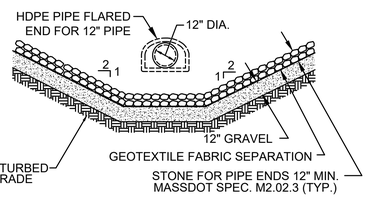

SECTION B-B

OUTLET SEDIMENT TRAP (TYP.)

SCALE: NOT TO SCALE

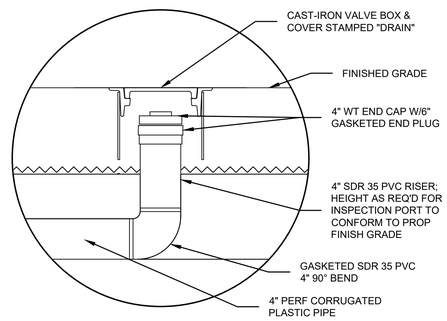

TYPICAL CLEANOUT DETAIL

SCALE: NOT TO SCALE

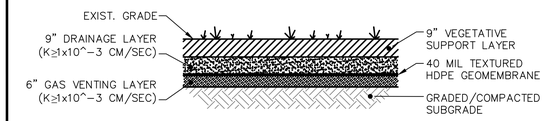

TYPICAL EXISTING FINAL COVER-CROSS SECTION

SCALE: NOT TO SCALE

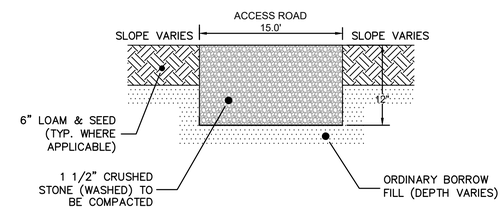

CRUSHED STONE ACCESS ROAD-CROSS SECTION

SCALE: NOT TO SCALE

NOTES:

1. PRIOR TO EXCAVATION OF ANY KIND WITHIN THE SLUDGE LANDFILL, THE CONTRACTOR SHALL STAKE OUT THE LIMITS OF EXCAVATION SUPPORT (SHEETING) FOR THE CONSTRUCTION OF THE NEW BIOLOGICAL TREATMENT REACTOR.
2. WHERE THE EXCAVATION SUPPORT STAKING INTERSECTS THE GEOMEMBRANE CAP LIMITS, THE CONTRACTOR SHALL EXCAVATE SEVERAL FEET BEYOND THE STAKING (FURTHER INTO THE LANDFILL), REMOVE THE OVERLAYING VEGETATIVE & DRAINAGE LAYERS, AND CUT THE GEOMEMBRANE. THIS WILL PREVENT ANY PULLING, TEARING, OR FURTHER DISTURBANCE TO THE GEOMEMBRANE DURING INSTALLATION OF THE EXCAVATION SUPPORT. THE CONTRACTOR SHALL BE RESPONSIBLE FOR THE REMOVAL AND DISPOSAL OF THE VEGETATIVE LAYER, VEGETATIVE LAYER, DRAINAGE LAYER, GAS VENTING LAYER, AND SLUDGE LAYER THAT IS DISTURBED BY THE PROPOSED WORK.
3. THE CONTRACTOR SHALL MAINTAIN FLOW OF THE EXISTING SLUDGE LANDFILL SUB-DRAIN SYSTEM THROUGHOUT CONSTRUCTION. PUMPED FLOWS SHALL BE DISCHARGED IN THE AREA OF THE PROPOSED OUTLET SEDIMENTATION TRAP.
4. NEW GEOMEMBRANE SHALL BE EXTRUSION OR FUSION WELDED TO THE EXISTING GEOMEMBRANE. GEOMEMBRANE SHALL OVERLAP BY A MINIMUM OF 3-INCHES FOR EXTRUSION WELDING AND 5-INCHES FOR FUSION WELDING. GEOMEMBRANE SHALL HAVE A MINIMUM TENSILE STRENGTH OF 87 LB/IN AND HAVE A PUNCTURE STRENGTH OF 100 LB. THE CONTRACTOR SHALL SUBMIT AND RECEIVE APPROVAL OF A SHOP DRAWING OF THE GEOMEMBRANE PRIOR TO INSTALLATION.
5. DRAINAGE LAYER SHALL CONSIST OF SAND THAT IS FREE OF CONTAMINATION, SHARP ROCKS, DEBRIS OF ANY KIND, ORGANIC MATTER, AND METALS. SAND SHALL BE CLASSIFIED AS (SP) OR (SW) BY THE USGS AND HAVE NO PARTICLES GREATER THAN 3/8 INCH IN DIAMETER. NO MORE THAN 5-PERCENT OF THE DRAINAGE LAYER MATERIAL SHALL PASS THE #200 SIEVE. CONTRACTOR SHALL SUBMIT A SAMPLE OF THE SAND FOR APPROVAL.
6. VEGETATIVE SUPPORT LAYER SHALL BE INSTALLED AT A THICKNESS OF OF 9-INCHES. THE MATERIAL SHALL BE FREE OF LARGE LARGE ROCKS, DEBRIS, STUMPS, OR ANY OTHER UNSUITABLE MATERIAL. ALL MATERIAL MUST PASS THE 3-INCH SIEVE WITH A MINIMUM OF 95-PERCENT PASSING THE 1-INCH SIEVE. THE MINIMUM ORGANIC CONTENT MUST BE 3-PERCENT.
7. THE SEED MIXTURE SHALL BE AS FOLLOWS, OR EQUAL.
   - 35% PERENNIAL RYE GRASS
   - 35% CREEPING RED FESCUE
   - 15% KENTUCKY BLUE GRASS
   - 10% ANNUAL RYE GRASS
   - 5% WHITE CLOVER
8. THE GAS VENTING LAYER SHALL CONSIST OF 3/4 INCH TO 1-1/2 INCH DOUBLE WASHED STONE.

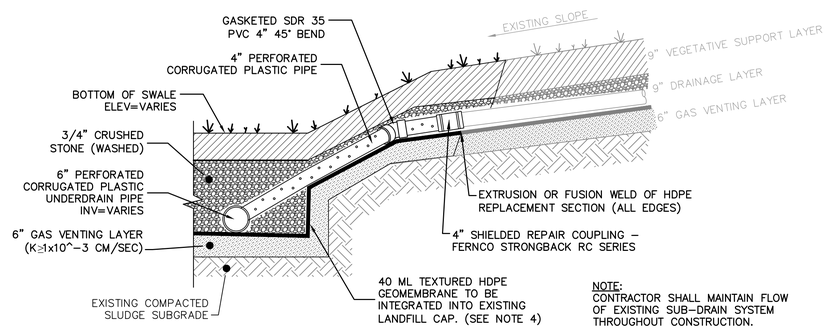

NOTE:
CONTRACTOR SHALL MAINTAIN FLOW OF EXISTING SUB-DRAIN SYSTEM THROUGHOUT CONSTRUCTION.

CONNECTION TO EXISTING SUB-DRIAN SYSTEM

SCALE: NOT TO SCALE

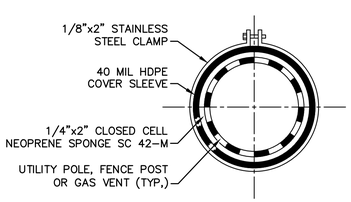

SECTION A-A

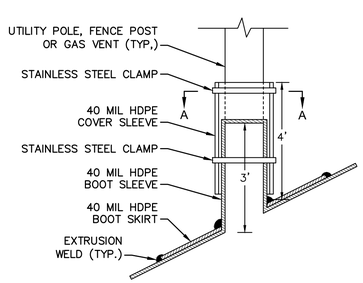

TYPICAL FINAL COVER GEOMEMBRANE LINER PENETRATION BOOT

SCALE: NOT TO SCALE

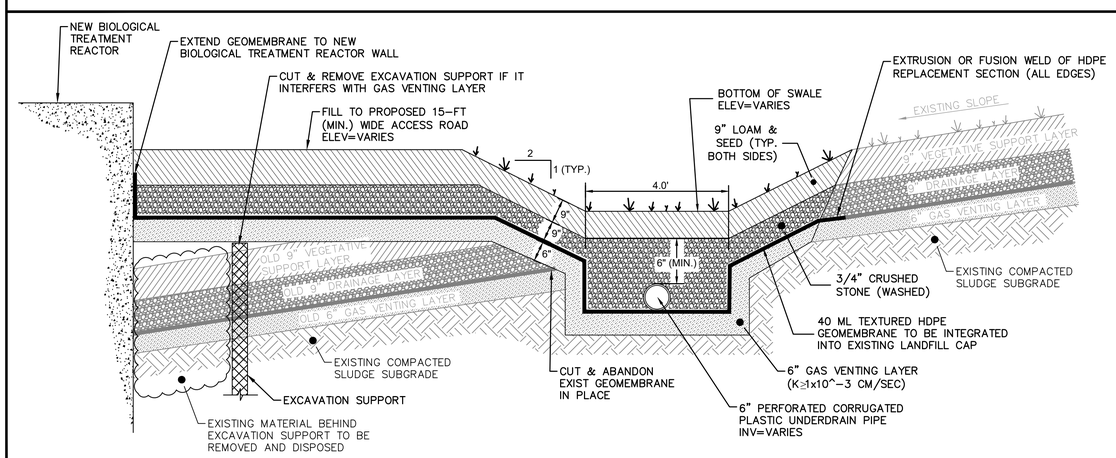

DRAINAGE SWALE-CROSS SECTION

SCALE: NOT TO SCALE

PREPARED BY

BETA
www.BETA-Inc.com

REGISTERED PROFESSIONAL

COMMONWEALTH OF MASSACHUSETTS
JOSEPH FEDERICO, JR.
No. 30663
REGISTERED PROFESSIONAL ENGINEER

SUBCONSULTANT

PROJECT

Taunton Wastewater Treatment Facility Improvements Phase 2

Taunton, MA

TITLE

Sludge Landfill Details & Notes

NO.	REVISIONS	DATE

DRAWN BY:	BM
DESIGNED BY:	BM
CHECKED BY:	SR
ISSUE DATE:	3/31/2022
BETA JOB NO.:	6050

SCALE

AS SHOWN

UNLESS OTHERWISE NOTED OR CHANGED BY REPRODUCTION

SHEET NO.

C-1.18

3/31/2022 10:02 AM J:\TAUNTON\WWTF DESIGN\AUTOCAD\PLAN SET\PHASE 2\SLUDGE LANDFILL - PROP SITE PLAN & DETAILS.DWG (BETA STD BW.CTB)

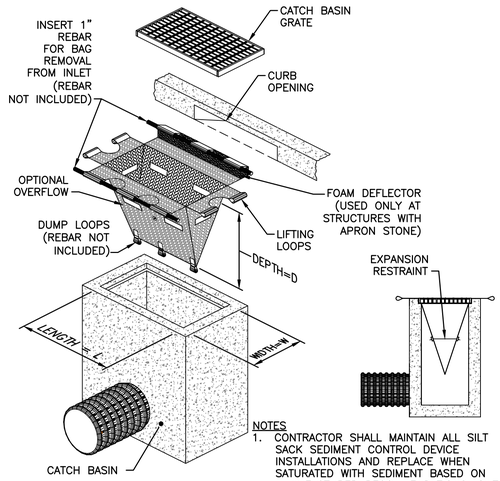

NOTES
1. CONTRACTOR SHALL MAINTAIN ALL SILT SACK SEDIMENT CONTROL DEVICE INSTALLATIONS AND REPLACE WHEN SATURATED WITH SEDIMENT BASED ON MANUFACTURER RECOMMENDATIONS. SILT SACK SHALL BE INSPECTED AFTER EVERY RAIN EVENT BUT NO LONGER THAN EVERY TWO WEEKS.
2. SILT SACK SHALL BE DOUBLE NEEDLE SEWN POLYPROPLYENE GEOTEXTILE FABRIC AND RATED FOR HIGH FLOW UNLESS OTHERWISE DIRECTED.
3. CONTRACTOR SHALL PROVIDE CURB OPENING DEFLECTOR AT ALL CATCH BASINS AS NECESSARY.

TYPICAL CATCH BASIN EROSION CONTROL PROTECTION

SCALE: NOT TO SCALE

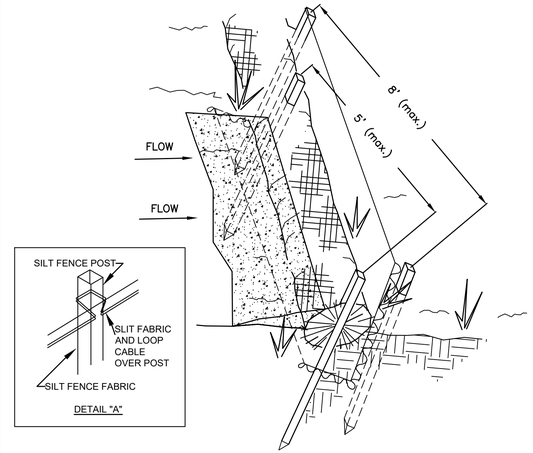

NOTES

1. STRAW WATTLES SHALL BE INSTALLED IN SHALLOW TRENCHES, DUG 3 TO 4–INCHES DEEP, PLACED IN A ROW WITH ENDS TIGHTLY ABUTTING THE ADJACENT WATTLES.

2. STRAW WATTLES SHALL BE SECURELY ANCHORED IN PLACE BY STAKES OR REBARS DRIVEN THOUGH THE WATTLES. THE FIRST STAKE IN EACH WATTLE SHALL BE ANGLED TOWARDS PREVIOUSLY LAID WATTLE TO FORCE WATTLES TOGETHER. ANCHOR STRAW WATTLES WITH A MINIMUM OF 5 STAKES PER WATTLE, INSTALLED "TIGHT" AGAINST SILT FENCE.

3. SILT FENCE TO BE INSTALLED A MIN. OF 6–INCHES DEEP, WITH A 6–INCH LIP TOED INTO SEDIMENT TO PREVENT MIGRATION BENEATH SILT FENCE.

4. EXCAVATED SOILS SHALL BE THOROUGHLY COMPACTED ONCE COMPLETE WITH THE INSTALLATION OF EROSION CONTROL DEVICES.

5. INSPECTION SHALL BE FREQUENT AND REPAIR OR REPLACEMENT SHALL BE MADE PROMPTLY AS NEEDED WITHOUT FURTHER COMPENSATION TO CONTRACTOR.

6. STRAW WATTLES AND SILT FENCE SHALL BE REMOVED WHEN THEY HAVE SERVED THEIR USEFUL–NESS SO AS NOT TO BLOCK OR IMPEDE STORM FLOW OR DRAINAGE.

TYPICAL STRAW WATTLE FOR EROSION CONTROL

SCALE: NOT TO SCALE

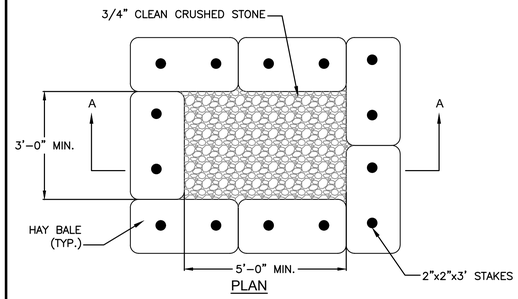

PLAN

NOTE: ALL DEWATERING DISCHARGES SHALL BE THROUGH SEDIMENT CONTROL TRAPS, CONTRACTOR SHALL MAINTAIN AND CLEAN TRAP AS REQUIRED.

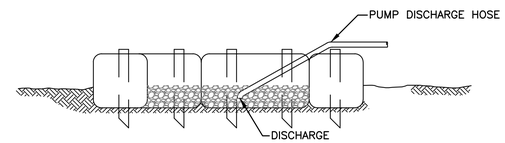

SECTION A-A

SEDIMENT CONTROL TRAP OPTION

SCALE: NOT TO SCALE

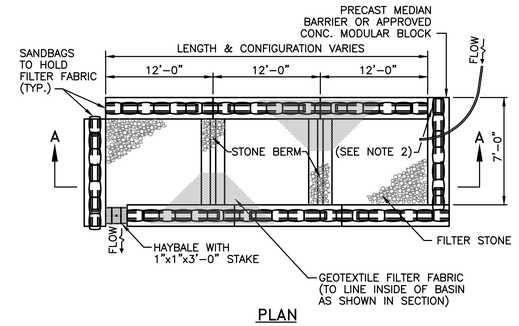

PLAN

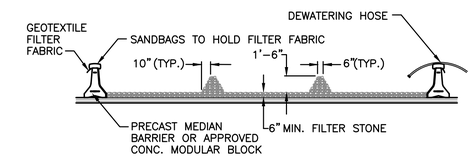

SECTION

NOTS:
1. PROVIDE ADDITIONAL SAND BAGS AS REQUIRED TO FILL SPACE BETWEEN ADJACENT BARRIERS AND/OR BLOCKS

TYPICAL DEWATERING STILLING BASIN OPTION

SCALE: NOT TO SCALE

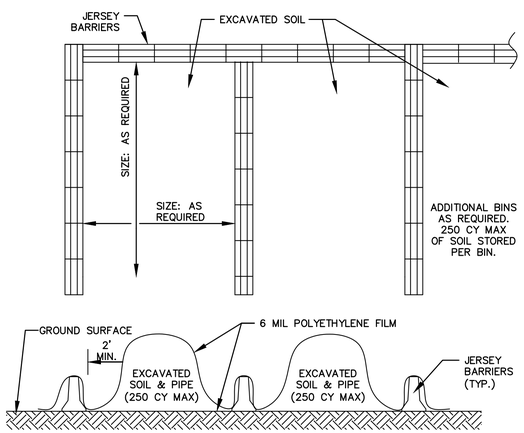

ELEVATION

NOTES:

1. THE CONTRACTOR SHALL PROVIDE, INSTALL, AND MAINTAIN POLYETHYLENE SHEETING & JERSEY BARRIERS AS SHOWN AND AS REQUIRED BY SPECIFICATION SECTION 02080.

2. PERIODICALLY (AT LEAST WEEKLY) INSPECT THE STOCKPILES TO INSURE THAT THE LINER AND COVER ARE INTACT AND SECURELY ANCHORED.

3. SWEEP AND DISPOSE OF ALL RESIDUAL DIRT, DUST AND DEBRIS FROM THE STAGING AREA AFTER COMPLETION OF THE WORK.

4. JERSEY BARRIERS SHALL BE PLACED AS SHOWN OR AS DIRECTED BY THE OWNER'S REPRESENTATIVE UNTIL IT IS NO LONGER NEEDED FOR THE PURPOSE INTENDED.

5. ALL POLYETHYLENE SHALL BE REMOVED AND PROPERLY DISPOSED OF.

SOIL STOCKPILE AREA

SCALE: NOT TO SCALE

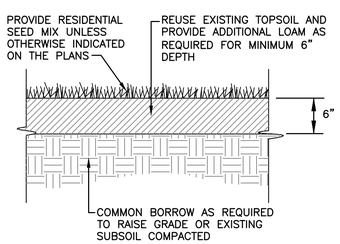

LOAM AND SEED DETAIL

NOT TO SCALE

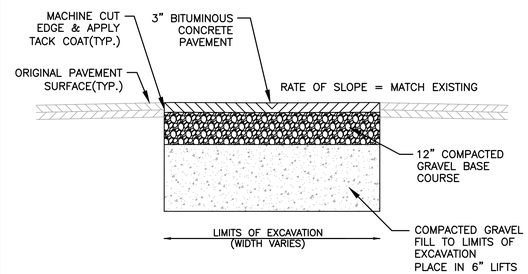

TYPICAL TEMPORARY PAVEMENT

SCALE: NOT TO SCALE

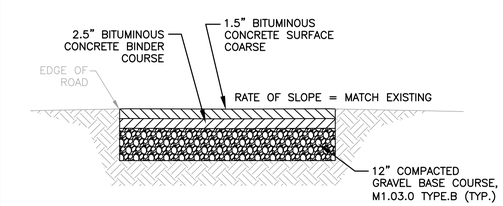

TYPICAL PAVEMENT FOR DRIVEWAYS, PARKING AREAS, & ACCESS ROADS

SCALE: NOT TO SCALE

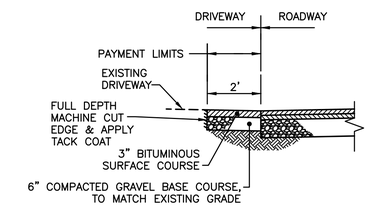

NOTE:

1. ALL DRIVEWAY SAWCUTS AND RESTORATIONS ARE TO BE DONE WITHIN THE ROADWAY RIGHT–OF–WAY. CONTRACTOR IS NOT TO CONDUCT ANY DRIVEWAY RESTORATION ON PRIVATE PROPERTY.

TYPICAL DRIVEWAY APRON RESORATION

SCALE: NOT TO SCALE

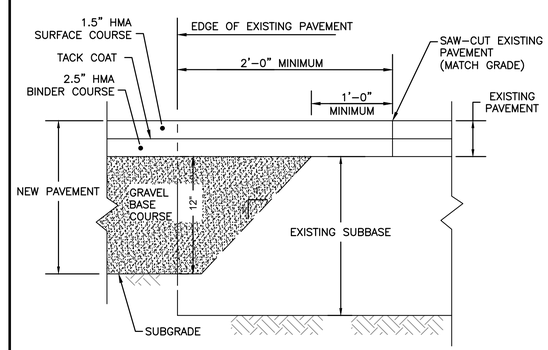

PAVEMENT MATCHING DETAIL

SCALE: NOT TO SCALE

PREPARED BY

BETA
www.BETA-Inc.com

REGISTERED PROFESSIONAL

COMMONWEALTH OF MASSACHUSETTS
JOSEPH FEDERICO, JR.
No. 30663
REGISTERED PROFESSIONAL ENGINEER

SUBCONSULTANT

PROJECT

Taunton Wastewater Treatment Facility Improvements Phase 2

Taunton, MA

TITLE

Civil Details I

NO.	REVISIONS	DATE

DRAWN BY:	BM
DESIGNED BY:	BM
CHECKED BY:	SR
ISSUE DATE:	3/31/2022
BETA JOB NO.:	6050

SCALE

AS SHOWN

UNLESS OTHERWISE NOTED OR CHANGED BY REPRODUCTION

SHEET NO.

CD-1

3/31/2022 10:02 AM J:\TAUNTON\WWTF DESIGN\AUTOCAD\PLAN SET\PHASE 2\CIVIL DETAILS.DWG (BETA STD BW.CTB)

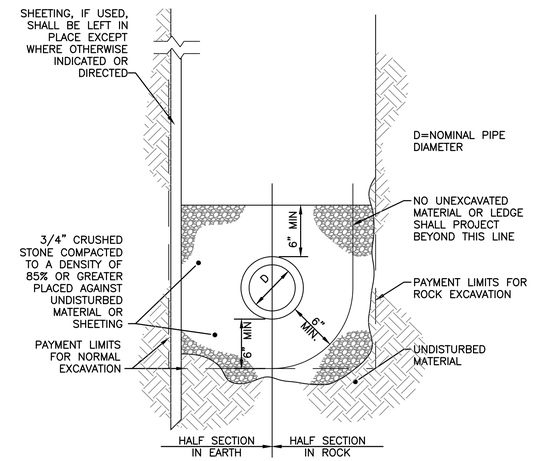

GRAVITY SEWER TRENCH

SCALE: NOT TO SCALE

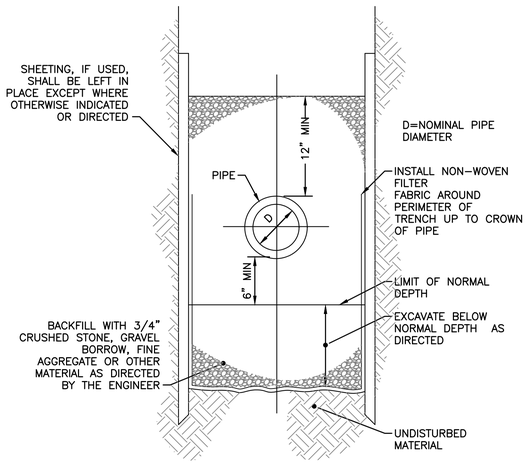

TRENCH SECTION (WHERE UNSUITABLE MATERIAL EXISTS BELOW NORMAL DEPTH)

SCALE: NOT TO SCALE

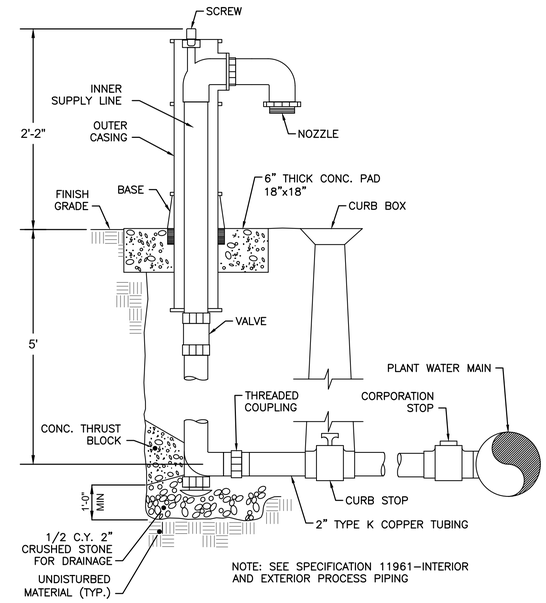

PLANT WATER HYDRANT DETAIL

SCALE: NOT TO SCALE

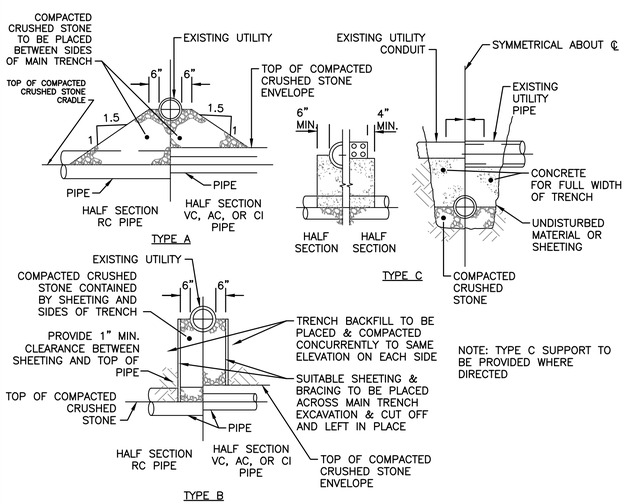

TYPICAL SUPPORTS FOR UTILITIES

SCALE: NOT TO SCALE

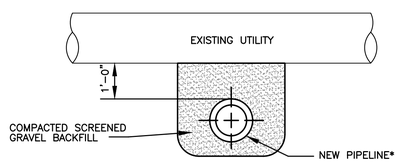

* ONE FULL LENGTH OF PIPE CENTERED UNDER EXISTING PIPE OTHER THAN SEWERS

NOTE: DETAIL APPLICABLE FOR PIPE SECTIONS EXPOSED DURING CONSTRUCTION

TRENCH SECTION AT EXISTING UTILITIES

SCALE: NOT TO SCALE

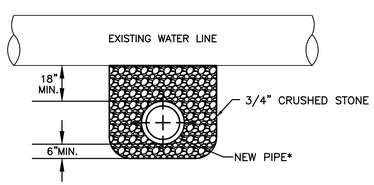

* ONE FULL LENGTH OF PIPE CENTERED UNDER EXISTING PIPE

NOTE: DETAIL APPLICABLE FOR PIPE SECTIONS EXPOSED DURING CONSTRUCTION

TYPICAL SECTION AT EXISTING WATER

SCALE: NOT TO SCALE

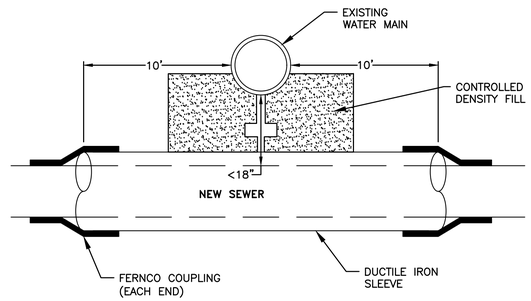

DUCTILE IRON SLEEVE

SCALE: NOT TO SCALE

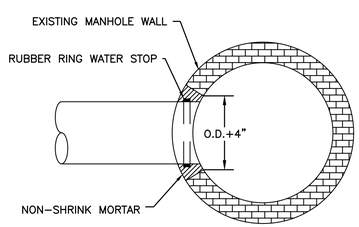

NON-SHRINK MORTAR JOINTS FOR CONNECTING PIPES TO PRECAST/ BLOCK & BRICK MANHOLE

SCALE: NOT TO SCALE

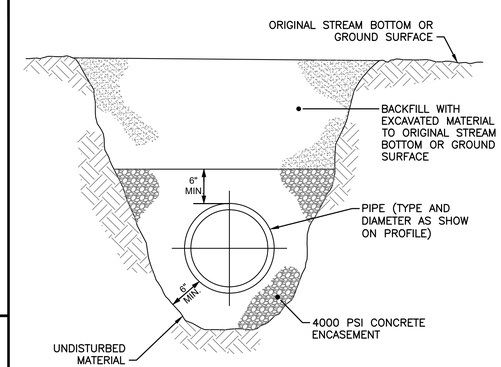

NOTES
1. THE PIPE SHALL BE PROPERLY SECURED TO PREVENT DISPLACEMENT DURING THE POURING OF CONCRETE ENCASEMENT.
2. LIMIT OF CONCRETE ENCASEMENT SHALL BE SHOWN ON THE PROFILE OR AS DIRECTED.

CONCRETE ENCASEMENT DETAIL

SCALE: NOT TO SCALE

PREPARED BY

BETA
www.BETA-Inc.com

REGISTERED PROFESSIONAL

COMMONWEALTH OF MASSACHUSETTS
JOSEPH FEDERICO, JR.
No. 30663
REGISTERED PROFESSIONAL ENGINEER

SUBCONSULTANT

PROJECT

Taunton Wastewater Treatment Facility Improvements Phase 2

Taunton, MA

TITLE

Civil Details II

NO.	REVISIONS	DATE

DRAWN BY:	BM
DESIGNED BY:	BM
CHECKED BY:	SR
ISSUE DATE:	3/31/2022
BETA JOB NO.:	6050

SCALE

AS SHOWN

UNLESS OTHERWISE NOTED OR CHANGED BY REPRODUCTION

SHEET NO.

CD-2

3/31/2022 10:02 AM J:\TAUNTON\WWTF DESIGN\AUTOCAD\PLAN SET\PHASE 2\CIVIL DETAILS.DWG (BETA STD BW.CTB)

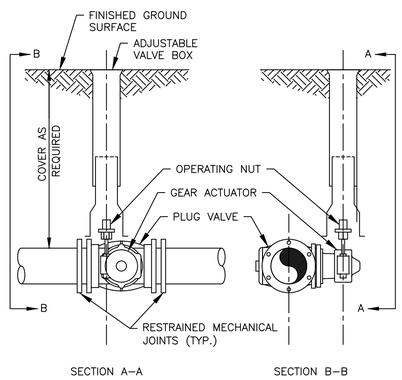

TYPICAL BURIED PLUG VALVE

SCALE: NOT TO SCALE

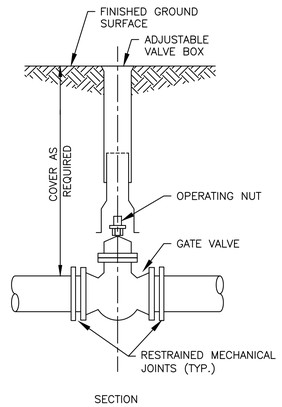

TYPICAL GATE VALVE

SCALE: NOT TO SCALE

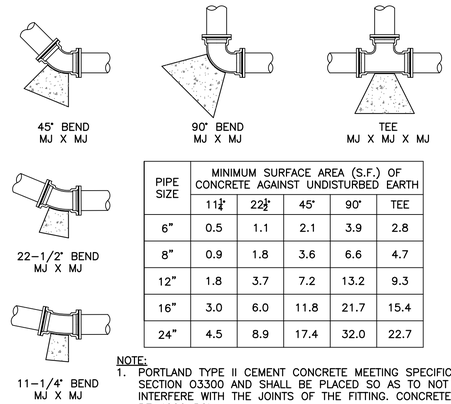

PIPE SIZE	MINIMUM SURFACE AREA (S.F.) OF CONCRETE AGAINST UNDISTURBED EARTH				
	11¼°	22½°	45°	90°	TEE
6"	0.5	1.1	2.1	3.9	2.8
8"	0.9	1.8	3.6	6.6	4.7
12"	1.8	3.7	7.2	13.2	9.3
16"	3.0	6.0	11.8	21.7	15.4
24"	4.5	8.9	17.4	32.0	22.7

NOTE:
1. PORTLAND TYPE II CEMENT CONCRETE MEETING SPECIFICATION SECTION 03300 AND SHALL BE PLACED SO AS TO NOT INTERFERE WITH THE JOINTS OF THE FITTING. CONCRETE SHALL BE 4000 PSI.
2. POLYPROPYLENE SHEETING SHALL BE PLACED AROUND FITTINGS PRIOR TO POURING CONCRETE IN ACCORDANCE WITH AWWA C105.

8–INCH						
END	45° BEND	22.5° BEND	11.25° BEND	8X6 RED.	8X8 TEE	8X6 TEE
49 FT	12 FT	6 FT	3 FT	21 FT	40 FT	25 FT

24–INCH							
45° BEND	22.5° VERT.	22.5° BEND	11.25° BEND	24x24 TEE	24x6 TEE	24x20 RED.	30x24 WYE
18 FT	16 FT	9 FT	5 FT	61 FT	1 FT	23 FT	73 FT

THRUST BLOCK BEARING AREAS AND RESTRAINED LENGTH FOR SEWER MAIN AND WATER MAIN

SCALE: NOT TO SCALE

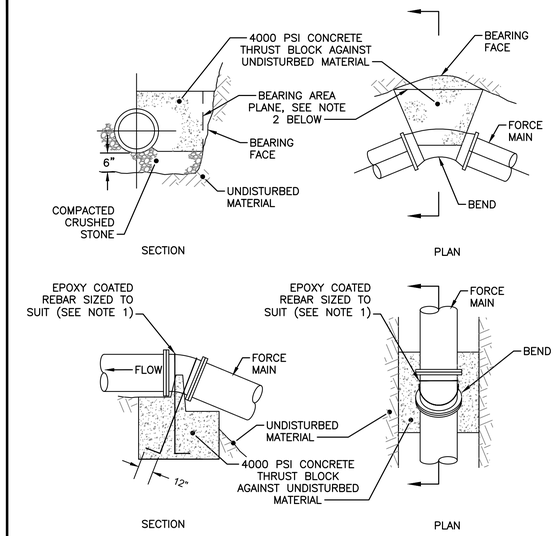

NOTES
1. ALL FORCE MAIN BENDS SHALL BE BACKED UP WITH A CONCRETE THRUST BLOCK BETWEEN THE PIPE AND UNDISTURBED MATERIAL IN ACCORDANCE WITH DUCTILE IRON PIPE RESEARCH ASSOCIATION THRUST RESTRAINT DESIGN FOR DUCTILE IRON PIPE.
2. BEARING AREA REQUIRED ON VERTICAL PLANE 90 DEGREES TO RADIUS PLANE PASSING THROUGH MIDPOINT OF BEND
3. POLYPROPYLENE SHEETING SHALL BE PLACED AROUND FITTINGS PRIOR TO POURING CONCRETE IN ACCORDANCE WITH AWWA C105.

VERTICAL & HORIZONTAL BEND THRUST BLOCK

SCALE: NOT TO SCALE

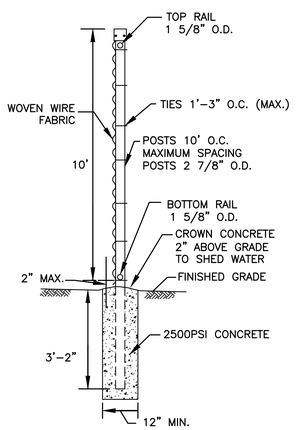

TYPICAL CHAIN–LINK FENCE SECTION

SCALE: NOT TO SCALE

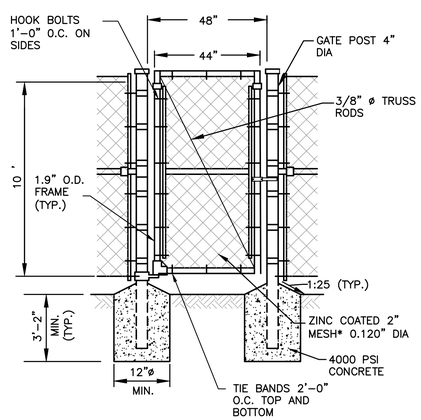

* FABRIC: 2" WIRE MESH, 9 GAUGE WIRE, CLASS 2A PVC COATING EXTRUDED AND ADHERED TO ZINC COATED WIRE. COLOR: BLACK.

TYPICAL PEDESTRIAN GATE

SCALE: NOT TO SCALE

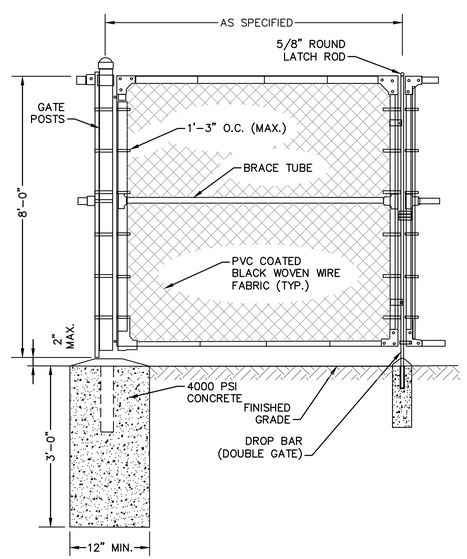

TYPICAL SWING GATE

SCALE: NOT TO SCALE

NOTE
1. 6" O.D. GALVANIZED STEEL PIPE AND 6" I.D. GALVANIZED STEEL SLEEVE SHALL BE PRODUCED IN THE UNITED STATES IN ACCORDANCE WITH AMERICAN IRON AND STEEL REQUIREMENTS OF P.L. 113–76, THE CONSOLIDATED APPROPRIATIONS ACT OF 2014

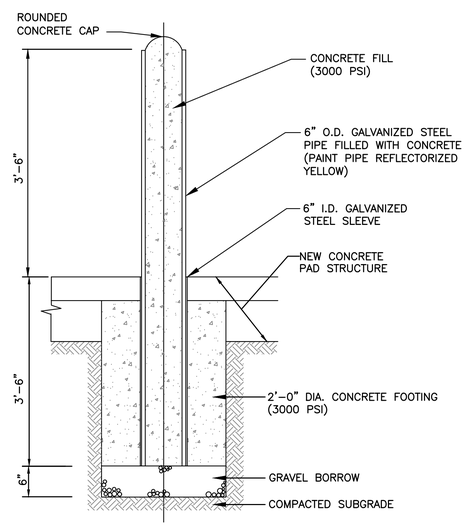

CONCRETE–FILLED STEEL BOLLARD

SCALE: NOT TO SCALE

PREPARED BY

BETA
www.BETA-Inc.com

REGISTERED PROFESSIONAL

COMMONWEALTH OF MASSACHUSETTS
JOSEPH FEDERICO, JR.
No. 30663
REGISTERED PROFESSIONAL ENGINEER

SUBCONSULTANT

PROJECT

Taunton Wastewater Treatment Facility Improvements Phase 2

Taunton, MA

TITLE

Civil Details III

NO.	REVISIONS	DATE

DRAWN BY:	BM
DESIGNED BY:	BM
CHECKED BY:	SR
ISSUE DATE:	3/31/2022
BETA JOB NO.:	6050

SCALE

AS SHOWN

UNLESS OTHERWISE NOTED OR CHANGED BY REPRODUCTION

SHEET NO.

CD-3

3/31/2022 10:02 AM J:\TAUNTON\WWTF DESIGN\AUTOCAD\PLAN SET\PHASE 2\CIVIL DETAILS.DWG (BETA STD BW.CTB)

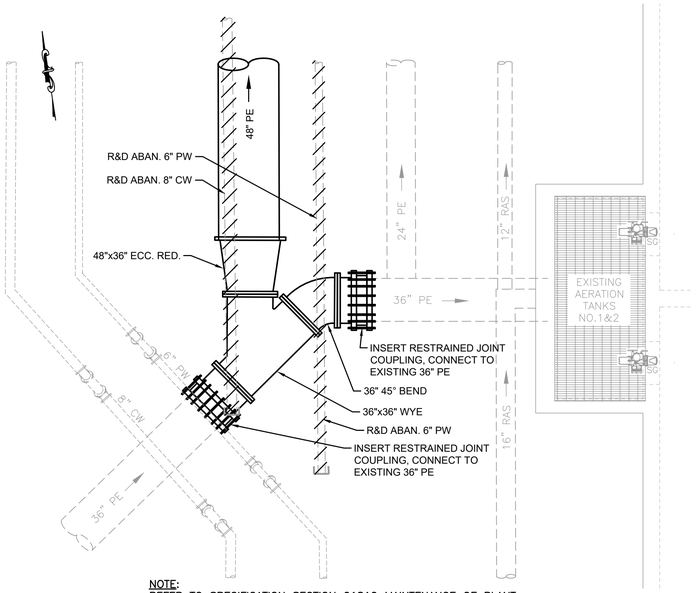

NOTE:
REFER TO SPECIFICATION SECTION 01810 MAINTENANCE OF PLANT OPERATIONS AND SEQUENCE OF CONSTRUCTION

PRIMARY EFFLUENT CROSS CONNECTION SEQ. OF CONSTRUCTION PHASE A

SCALE: 1" = 5'

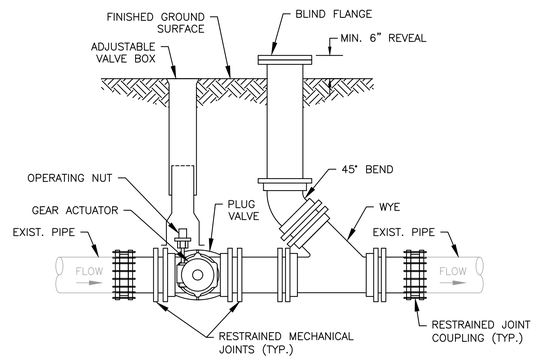

TYPICAL WAS/RAS BYPASS CONNECTION

SCALE: NOT TO SCALE

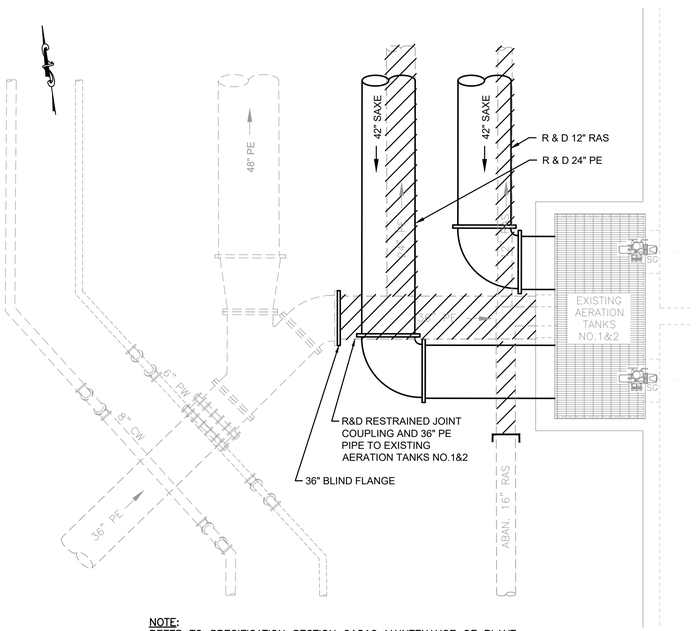

NOTE:
REFER TO SPECIFICATION SECTION 01810 MAINTENANCE OF PLANT OPERATIONS AND SEQUENCE OF CONSTRUCTION

PRIMARY EFFLUENT CROSS CONNECTION SEQ. OF CONSTRUCTION PHASE D

SCALE: 1" = 5'

PREPARED BY

BETA
www.BETA-Inc.com

REGISTERED PROFESSIONAL

COMMONWEALTH OF MASSACHUSETTS
JOSEPH FEDERICO, JR.
No. 30663
REGISTERED PROFESSIONAL ENGINEER

SUBCONSULTANT

PROJECT

Taunton Wastewater Treatment Facility Improvements Phase 2

Taunton, MA

TITLE

Civil Details IV

NO.	REVISIONS	DATE

DRAWN BY:	BM
DESIGNED BY:	BM
CHECKED BY:	JD
ISSUE DATE:	3/31/2022
BETA JOB NO.:	6050

SCALE

AS SHOWN

UNLESS OTHERWISE NOTED OR CHANGED BY REPRODUCTION

SHEET NO.

CD-4

3/31/2022 10:03 AM J:\TAUNTON\WWTF DESIGN\AUTOCAD\PLAN SET\PHASE 2\CIVIL DETAILS.DWG (BETA STD BW.CTB)

GENERAL STRUCTURAL NOTES:

1. STRUCTURAL WORK SHALL CONFORM TO THE REQUIREMENTS OF THE COMMONWEALTH OF MASSACHUSETTS STATE BUILDING CODE, 9TH EDITION.
2. SPECIFICATIONS ARE PART OF THE CONSTRUCTION DOCUMENTS AND MUST BE USED IN CONJUNCTION WITH THE DRAWINGS.
3. VERIFY EXISTING CONDITIONS AND DIMENSIONS PRIOR TO BEGINNING WORK OR FABRICATING MATERIALS. NOTIFY THE ENGINEER OF DISCREPANCIES BEFORE PROCEEDING WITH ANY PHASE OF WORK.
4. THE CONTRACTOR SHALL BE RESPONSIBLE FOR NOTIFYING DIG SAFE PRIOR TO THE START OF ANY EXCAVATION OR SITE WORK.
5. DO NOT SCALE FROM THESE DRAWINGS. REFER TO LABELED DIMENSIONS ONLY.
6. DETAILS LABELED "TYPICAL DETAILS" ON DRAWINGS APPLY TO SITUATIONS OCCURRING ON THE PROJECT THAT ARE THE SAME OR SIMILAR TO THOSE SPECIFICALLY DETAILED. SUCH DETAILS APPLY WHETHER OR NOT DETAILS ARE REFERENCED AT EACH LOCATION. NOTIFY ENGINEER OF CONFLICTS REGARDING APPLICABILITY OF TYPICAL DETAILS.
7. COORDINATE THE WORK OF THESE DRAWINGS WITH OTHER TRADES. DIMENSIONS AND QUANTITIES OF RELATED WORK ARE PROVIDED FOR GENERAL GUIDANCE AND SHALL BE CONFIRMED.
8. DO NOT LOAD SLABS ON GRADE OR SUPPORTED SLAB WITH ERECTION CRANES OR ERECTION EQUIPMENT. THE SLABS HAVE NOT BEEN DESIGNED FOR CRANE LOADS AND WILL REQUIRE AN INCREASE IN THICKNESS AND/OR REINFORCEMENT. CONTRACTOR SHALL OBTAIN ENGINEER'S APPROVAL ON PROPOSED CRANE SUPPORT PLAN FOR SLABS PRIOR TO COMMENCING WORK.
9. DO NOT STORE OR STACK CONSTRUCTION MATERIALS ON POURED OR ERECTED FLOORS/WALLS/ROOFS IN EXCESS OF 80 PERCENT OF LIVE LOAD. GENERAL CONTRACTOR WILL ENSURE THAT ALL SUB-CONTRACTORS ARE INFORMED OF LOADING RESTRICTIONS. AVOID IMPACT WHEN PLACING MATERIALS ON POURED OR ERECTED FLOORS OR ROOFS.
10. OPENINGS IN SLABS AND WALLS LESS THAN 12" MAXIMUM DIMENSION ARE GENERALLY NOT SHOWN ON STRUCTURAL DRAWINGS. OPENINGS SHOWN ON DRAWINGS SHALL NOT BE REVISED WITHOUT PRIOR WRITTEN APPROVAL.
11. THE CONTRACTOR SHALL SHORE, BRACE, SHEETPILE, OR OTHERWISE SUPPORT THE STRUCTURE AS REQUIRED TO MAINTAIN STRUCTURAL INTEGRITY AT ALL TIMES. SHORING DESIGN, IF REQUIRED, SHALL BE DESIGNED, ERECTED, SUPPORTED, BRACED, AND MAINTAINED BY THE CONTRACTOR TO SAFELY SUPPORT ALL DEAD LOADS CARRIED BY THE STRUCTURAL WORK BEING SHORED, AND ANY CONSTRUCTION LIVE LOADS.
12. IF TEMPORARY SHORING IS REQUIRED, NEW STRUCTURAL SYSTEMS SHALL BE COMPLETELY INSTALLED AND CAPABLE OF SUPPORTING DESIGN LOADS BEFORE SHORES ARE REMOVED. SHORES SHALL BE RELEASED GRADUALLY.
13. THE CONTRACT STRUCTURAL DOCUMENTS REPRESENT THE FINISHED STRUCTURES. THE CONTRACTOR IS RESPONSIBLE FOR THE MEANS AND METHODS OF CONSTRUCTION. PROVIDE ALL MEASURES REQUIRED TO PROTECT THE STRUCTURES, WORKMEN, AND OTHER PERSONS DURING CONSTRUCTION, INCLUDING BRACING, TEMPORARY SHORING, BUILDING SHORING, FORMS AND SCAFFOLDING, SHORING OF RETAINING WALLS AND OTHER TEMPORARY SUPPORTS AS REQUIRED. COMPLY WITH APPLICABLE REQUIREMENTS OF OSHA AND OTHER GOVERNING BODIES HAVING JURISDICTION AT THE SITE.
14. BACKFILLING AND COMPACTING ADJACENT TO THE STRUCTURE WALLS SHALL NOT BE PERMITTED UNTIL ALL THE CONCRETE HAS REACHED THE FULL STRUCTURAL CAPACITY.
15. USE OF EXCAVATED MATERIAL SHALL NOT BE PERMITTED FOR USE OF BACKFILLING ADJACENT TO STRUCTURE. BACKFILL SHALL CONSIST OF A CLEAN GRAVEL (SEE SPECIFICATIONS).

DESIGN LOADS:

SNOW LOADS:	
GROUND SNOW LOAD (Pg)	30.0 P.S.F.
FLAT ROOF SNOW LOAD (Pf)	23.1 P.S.F.
WIND LOADS:	
BASIC WIND SPEED	145 MPH
RISK CATEGORY	CATEGORY III
WIND EXPOSURE CATEGORY	CATEGORY B
SEISMIC:	
IMPORTANCE FACTOR (Ie)	1.25 (CATEGORY III)
DESIGN FACTOR Ss	0.183
DESIGN FACTOR S1	0.062
SITE CLASSIFICATION	D
SPECTRAL RESPONSE SDs	0.195
SPECTRAL RESPONSE SD1	0.099
SEISMIC DESIGN CATEGORY	B
MASONRY SHEAR BEARING WALL:	
DESIGN BASE SHEAR	80 KIP
RESPONSE COEFFICIENT Cs	0.122
RESPONSE MOD FACTOR R	2.0

CONCRETE:

1. CONCRETE WORK SHALL CONFORM TO BUILDING CODE REQUIREMENTS FOR STRUCTURAL CONCRETE (ACI 350) AND SPECIFICATIONS FOR STRUCTURAL CONCRETE FOR BUILDINGS (ACI 301).
2. UNLESS NOTED OTHERWISE, CONCRETE SHALL BE AS FOLLOWS:

		MAX. WATER CEMENT RATIO
FOOTINGS AND BASE SLABS	5000 P.S.I (NORMAL WEIGHT)	0.40
TANK WALLS:	5000 P.S.I. (NORMAL WEIGHT)	0.40
HOUSEKEEPING:	5000 P.S.I. (NORMAL WEIGHT)	0.40
SLAB-ON-GRADE:	5000 P.S.I. (NORMAL WEIGHT)	0.45
SUPPORT WALLS & GRATING SUPPORT COLUMNS:	5000 P.S.I. (NORMAL WEIGHT)	0.45

3. CONCRETE EXPOSED TO THE WEATHER SHALL BE AIR ENTRAINED.
4. PROVIDE VAPOR BARRIER UNDER INTERIOR SLABS CAST ON GRADE.
5. CONSTRUCTION JOINTS SHOWN ON THE DRAWINGS ARE MANDATORY.
6. SIZE OF CONCRETE PLACEMENTS, UNLESS NOTED OTHERWISE, SHALL CONFORM TO ACI GUIDELINES AND RECOMMENDATIONS.

REINFORCEMENT:

1. REINFORCEMENT SHALL CONFORM TO BUILDING CODE REQUIREMENTS FOR STRUCTURAL CONCRETE (ACI 350), ACI DETAILING MANUAL (SP-66), CRSI MANUAL OF STANDARD PRACTICE (MSP), AND THE STRUCTURAL WELDING CODE-REINFORCING STEEL (AWS D1).
2. STEEL REINFORCEMENT SHALL CONFORM TO ASTM A615 GRADE 60.
3. WELDED WIRE FABRIC SHALL CONFORM TO ASTM A185.
4. PROVIDE SUPPLEMENTAL BARS AND ACCESSORIES AS REQUIRED TO HOLD REINFORCEMENT SECURELY IN POSITION.
5. MINIMUM CONCRETE PROTECTIVE COVER, UNLESS NOTED OTHERWISE, SHALL BE AS FOLLOWS:

FOOTINGS & BASE SLAB - BOTTOMS:	3 INCHES
FOOTINGS & BASE SLAB - SIDES AND TOPS:	2 INCHES
WALLS:	2 INCHES
SLABS ON GRADE:	2 INCH TOP/3 BOTTOM

6. ALL CONTINUOUS REINFORCEMENT SHALL BE EXTENDED AROUND CORNERS AND LAPPED AT NECESSARY SPLICES OR HOOKED AT DISCONTINUOUS ENDS.
7. LAPS SHALL BE CLASS B TENSION LAP SPLICES, UNLESS NOTED OTHERWISE.
8. REINFORCEMENT SHALL BE CONTINUOUS THROUGH CONSTRUCTION JOINTS.
9. WELDED WIRE FABRIC SHALL LAP 8" OR 1-1/2 SPACES, WHICHEVER IS LARGER, AND SHALL BE WIRED TOGETHER.

FOUNDATIONS:

1. ALL FOOTINGS, BASE SLABS, AND SLABS ON GRADE SHALL BEAR ON NATURALLY DEPOSITED GLACIAL OUTWASH OR CONTROLLED DENSITY FILL FOR AN ALLOWABLE BEARING PRESSURE OF 4000 PSF IN ACCORDANCE WITH THE GEOTECHNICAL REPORT DATED NOVEMBER 2019 BY GZA GEOENVIRONMENTAL INC.
2. SEE THE SPECIFICATIONS FOR ALL RELATED CONSTRUCTION REQUIREMENTS.
3. ALL UNSUITABLE MATERIAL WITHIN FOUNDATIONS AND SLABS SHALL BE REMOVED AND REPLACED AS DIRECTED BY THE ENGINEER.
4. NO RESPONSIBILITY IS ASSUMED BY THE ENGINEER FOR THE VALIDITY OF THE SUBSURFACE CONDITIONS PRESENTED WITHIN THE CONTRACT DOCUMENTS. SUBSURFACE INVESTIGATIONS REFLECT THE CONDITIONS AT THE TIME THEY WERE PERFORMED. SUPPLEMENTAL INVESTIGATIONS SHALL BE PERFORMED BY THE CONTRACTOR AS REQUIRED TO COMPLETE THE WORK.
5. FOUNDATIONS MAY BE ALTERED TO SUIT EXISTING CONDITIONS AS DIRECTED BY THE ENGINEER.
6. PROVIDE TEMPORARY OR PERMANENT SUPPORTS AS REQUIRED TO PROTECT EXISTING AND NEWLY COMPLETED STRUCTURES AND UTILITIES.
7. CARRY OUT CONTINUOUS CONTROL OF SURFACE AND SUBSURFACE WATER DURING CONSTRUCTION SUCH THAT FOUNDATION WORK IS DONE IN DRY AND ON UNDISTURBED SUB-GRADE MATERIAL.
8. ALL CONCRETE SURFACES SHALL BE FORMED. DO NOT FORM AGAINST EXCAVATIONS WITHOUT PRIOR APPROVAL FROM THE ENGINEER.
9. NO FOUNDATION CONCRETE SHALL BE PLACED ON FROZEN SUB-GRADE MATERIAL.
10. PLACE BACKFILL BEHIND WALLS ON BOTH SIDES SIMULTANEOUSLY.
11. SLABS ON GRADE AND TANKS SHALL BE P;ACED ON 12" OF COMPACTED STRUCTURAL FILL.
12. COMPACTED STRUCTURAL FILL SHALL BE IN ACCORDANCE WITH SPECIFICATION SECTION 02215.
13. STRUCTURAL FILL SHALL BE PLACED ON FIRM MATERIAL, FREE OF STANDING WATER & THOROUGHLY COMPACTED IN LAYERS NOT EXCEEDING 12 IN. IN DEPTH.
14. COMPACTION OF STRUCTURAL FILL AND ANY ADJOINING EMBANKMENT MATERIAL SHALL BE DONE SIMULTANEOUSLY SO THAT THE RESPECTIVE MATERIALS WILL BE CONFINED SUBSTANTIALLY TO THE INDICATED LINES.

STAINLESS STEEL:

1. STRUCTURAL STEEL SHALL BE DETAILED IN ACCORDANCE WITH "DG27: STRUCTURAL STAINLESS STEEL" (AISC) AND, WHERE REQUIRED, DESIGNED IN ACCORDANCE WITH THE CITED REFERENCES.

   STRUCTURAL STAINLESS STEEL SHALL BE NEW STEEL CONFORMING TO THE FOLLOWING:

BARS & SHAPES:	ASTM A276 TYPE 316 GRADE 50
NUTS:	ASTM F594 TYPE 316
BOLTS & THREADED RODS	ASTM F593 TYPE 316 GRADE 65

3. PROVIDE TEMPORARY ERECTION BRACING AND SUPPORTS TO HOLD STRUCTURAL STEEL FRAMING SECURELY IN POSITION. SUCH TEMPORARY BRACING AND SUPPORTS SHALL NOT BE REMOVED UNTIL CONCRETE HAS ATTAINED 75% OF SPECIFIED CONCRETE STRENGTH.
4. FIELD CUTTING OF STRUCTURAL STEEL OR ANY FIELD MODIFICATIONS OF STRUCTURAL STEEL SHALL NOT BE MADE WITHOUT PRIOR WRITTEN APPROVAL.

ALUMINUM:

1. STRUCTURAL ALUMINUM TO CONFORM TO ALLOY 6061-T6. DETAIL AND FABRICATE IN CONFORMANCE WITH THE 2015 ALUMINUM DESIGN MANUAL.

STRUCTURAL STEEL:

1. WORK SHALL CONFORM TO SPECIFICATION FOR STRUCTURAL STEEL BUILDINGS, CODE OF STANDARD PRACTICE FOR STEEL BUILDINGS AND BRIDGES, AND THE STRUCTURAL WELDING CODE.
2. STRUCTURAL STEEL SHALL BE DETAILED IN ACCORDANCE WITH "DETAILING FOR STEEL CONSTRUCTION" (AISC) AND, WHERE REQUIRED, DESIGNED IN ACCORDANCE WITH THE CITED REFERENCES.
3. STRUCTURAL STEEL SHALL BE NEW STEEL CONFORMING TO THE FOLLOWING:

UNLESS NOTED OTHERWISE:	ASTM A992 GRADE 50 (FY = 50 K.S.I)
ANCHOR BOLTS:	ASTM F1554
HIGH STRENGTH BOLTS:	ASTM A325

4. BOLTED CONNECTIONS SHALL BE MADE WITH A325-N HIGH STRENGTH BOLTS DIAMETER AS SHOWN IN RESPECTIVE DETAILS.
5. WELDED CONNECTIONS SHALL BE MADE BY APPROVED CERTIFIED WELDERS USING FILLER METAL CONFORMING TO E70XX.
6. PROVIDE STIFFENERS WHERE SHOWN ON DRAWINGS.
7. PROVIDE TEMPORARY ERECTION BRACING AND SUPPORTS TO HOLD STRUCTURAL STEEL FRAMING SECURELY IN POSITION. SUCH TEMPORARY BRACING AND SUPPORTS SHALL NOT BE REMOVED UNTIL PERMANENT BRACING HAS BEEN INSTALLED AND CONCRETE FOR FLOOR SLABS HAS ATTAINED 75% OF SPECIFIED CONCRETE STRENGTH.
8. FIELD CUTTING OF STRUCTURAL STEEL OR ANY FIELD MODIFICATIONS OF STRUCTURAL STEEL SHALL NOT BE MADE WITHOUT PRIOR WRITTEN APPROVAL.
9. STRUCTURAL STEEL ENCASED IN MASONRY OR CONCRETE SHALL BE COVERED WITH MASTIC.
10. STRUCTURAL STEEL MEMBERS AND CONNECTIONS SHALL BE HOT-DIPPED GALVANIZED IN ACCORDANCE WITH SECTION 05120 OF THE SPECIFICATIONS.

METAL GRATING AND COVER PLATE NOTES:

1. GRATING, COVER PLATES, ANGLE FRAMES AND SUPPORTS SHALL BE ALL ALUMINUM CONSTRUCTION UNLESS OTHERWISE NOTED. COVER PLATES SHALL BE DIAMOND PLATE ALUMINUM ALLOY 6061-T6. GRATING SHALL BE ALUMINUM ALLOY 6061-T6.
2. FASTENERS, ANCHORS, BOLTS, NUTS AND WASHERS FOR GRATING, COVER PLATES AND SUPPORTS SHALL BE TYPE 316 STAINLESS STEEL.
3. GRATING PANEL LAYOUT SHALL PROVIDE FOR THE REMOVAL OF GRATING AROUND PIPE AND OTHER PENETRATIONS, AS REQUIRED.
4. BAND ALL GRATING ALONG EDGES AND AROUND OPENINGS WITH CONTINUOUS BAR SAME DEPTH & THICKNESS AS BEARING BARS.
5. ALL ANGLE FRAMES FOR GRATING AND COVER PLATES ARE TO BE MITERED AND WELDED AT CORNERS.
6. ALL GRATING IS TO BE SECURELY FASTENED TO SUPPORTS, UNLESS OTHERWISE NOTED.

PREPARED BY

BETA
www.BETA-Inc.com

REGISTERED PROFESSIONAL

COMMONWEALTH OF MASSACHUSETTS
TODD M. WARZECKI
CIVIL ENGINEER
No. 47367
REGISTERED PROFESSIONAL ENGINEER

SUBCONSULTANT

PROJECT

Taunton Wastewater Treatment Facility Improvements Phase 2

TAUNTON, MA

TITLE

Structural Notes (1 of 2)

NO.	REVISIONS	DATE

DRAWN BY:	BN
DESIGNED BY:	BN
CHECKED BY:	TMW
ISSUE DATE:	3/31/2022
BETA JOB NO.:	6050

SCALE

AS SHOWN

UNLESS OTHERWISE NOTED OR CHANGED BY REPRODUCTION

SHEET NO.

SG-1

3/31/2022 11:42 AM N:\6000S\6050 - TAUNTON WWTP\DRAWING FILES\PLANSET\PHASE 2\6050_SG1 - P2.DWG (BETA STB BW.STB)

SUBMITTALS, TESTING, AND INSPECTIONS:

1. SUBMITTALS AND TESTING SHALL BE AS REQUIRED BY THE MASSACHUSETTS STATE BUILDING CODE AND THESE FOLLOWING REQUIREMENTS.
2. FOR TESTING AGENCY REQUIREMENTS REFER TO SPECIFICATION 01410.
3. THE CONTRACTOR SHALL COORDINATE ALL WORK WITH THE TESTING AGENCY AND THE ENGINEERS OF RECORD ACCORDINGLY.
4. NOTIFY THE GEOTECHNICAL ENGINEER OF RECORD PRIOR TO FOUNDATION EXCAVATION.
5. NOTIFY THE STRUCTURAL ENGINEER OF RECORD PRIOR TO FIRST CONCRETE PLACEMENT.
6. SUBMITTALS INCLUDE BUT NOT LIMITED TO:
   DEWATERING
   BORROW MATERIAL
   CONCRETE MIX DESIGN
   STRUCTURAL STEEL
   STEEL REINFORCING
   ACCESSORIES
   ALUMINUM
   GRATING, HANDRAILS, AND ANCHOR ROD SYSTEMS
   CONSTRUCTION & EXPANSION JOINT MATERIAL
7. TESTS/INSPECTIONS INCLUDES BUT NOT LIMITED TO:
   EARTHWORK
   CONCRETE STRENGTH
   REINFORCING STEEL INSTALLATION
   CONCRETE PLACEMENT AND CURING
   STEEL BOLTING
8. THE CONTRACTOR SHALL KEEP COMPLETE AND ORGANIZED RECORDS OF ALL TESTS AND INSPECTIONS AND PROVIDE THEM TO THE ENGINEER SO THAT THE FINAL AFFIDAVIT CAN BE PREPARED. A BINDER SHALL BE MAINTAINED AT THE JOBSITE AT ALL TIMES FOR THE ENGINEER'S INSPECTION.
9. THE CONTRACTOR SHALL NOTIFY THE ENGINEER, IN ADVANCE, BEFORE CONCEALING ANY WORK THAT WILL REQUIRE OBSERVATION NEEDED TO PREPARE THE FINAL AFFIDAVIT.

LIST OF ABBREVIATIONS:

ARCH. – ARCHITECTURAL
ADD'L – ADDITIONAL
APPROX. – APPROXIMATE
BRG. – BEARING
B.O. – BOTTOM OF
C–C – CENTER TO CENTER
℄ – CENTERLINE
C.I.P. – CAST IN PLACE
CONC. – CONCRETE
CONST. – CONSTRUCTION
CONT. – CONTINUOUS
C.Y. – CUBIC YARD
d – DEEP
DET. – DETAIL
DTL. – DETAIL
DIA. – DIAMETER
DWG. – DRAWING
EA. – EACH
EL. – ELEVATION
ELEV. – ELEVATION
EMBED. – EMBEDMENT
E.F. – EACH FACE
E.S. – EACH SIDE
E.W. – EACH WAY
EXIST. – EXISTING
EXP. – EXPANSION
FIN. – FINISH
F.O. – FACE OF
FT. – FEET/FOOT
FTG. – FOOTING
GA. – GAUGE
GALV. – GALVANIZED
GC – GENERAL CONTRACTOR
h – HIGH
HORIZ. – HORIZONTAL
H.A. – HIGH POINT
I.F. – INSIDE FACE
IN. – INCH
I.D. – INSIDE DIAMETER
INFO. – INFORMATION
INV. – INVERT
JT. – JOINT
K.S.I. – KIPS PER SQUARE INCH
LG. – LONG
(LLH) – LONG LEG HORIZONTAL
(LLV) – LONG LEG VERTICAL
LOC.'S – LOCATIONS
MAX. – MAXIMUM
MIN. – MINIMUM
MISC. – MISCELLANEOUS
N.F. – NEAR FACE
N.S. – NEAR SIDE
N.T.S. – NOT TO SCALE
NO. – NUMBER
O.C. – ON CENTER
O.D. – OUTSIDE DIAMETER
O.F. – OUTSIDE FACE
PERIM. – PERIMETER
ℙ – PLATE
PVC – POLYVINYL CHLORIDE
P.S.F. – POUNDS PER SQUARE FOOT
P.S.I. – POUNDS PER SQUARE INCH
RAD. – RADIUS
REINF. – REINFORCING
REQ'D – REQUIRED
SECT. – SECTION
SCH. – SCHEDULE
S.F. – SQUARE FOOT
SHT. – SHEET
SIM. – SIMILAR
SP. – SPACES
S.S. – STAINLESS STEEL
STD. – STANDARD
STL. – STEEL
SYM. – SYMMETRIC
t – THICK
T&B – TOP AND BOTTOM
T.O. – TOP OF
TO.S. – TOP OF SLAB
T.O.W. – TOP OF WALL
TYP. – TYPICAL
U.N.O. – UNLESS NOTED OTHERWISE
VERT. – VERTICAL
W.W.F. – WELDED WIRE FABRIC
w – WIDE
w/ – WITH
ø – DIAMETER

SECTION AND DETAIL DESIGNATIONS:

SECTION CUT SYMBOL:

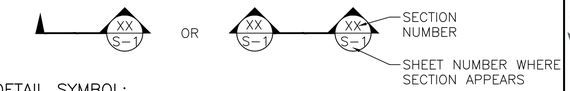

DETAIL SYMBOL:

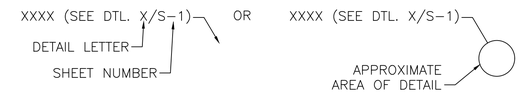

CONCRETE PENETRATION SCHEDULE:

PENETRATION NUMBER	PENETRATION TYPE (SEE MD–1)	PENETRATION LOCATION	CENTERLINE ELEVATION	PIPE DESCRIPTION	PIPE MATERIAL	NOMINAL SIZE (IN)
P–3.1	MECHANICAL JOINT x PLAIN END WALL PIPE	BIOLOGICAL TANK INFLUENT CHAMBER	14.00	PRIMARY EFFLUENT	DUCTILE IRON	48
P–3.2	PLAIN END x PLAIN END WALL PIPE	BIOLOGICAL TANK INFLUENT CHAMBER, TRAIN 1	14.00	PRIMARY EFFLUENT	DUCTILE IRON	42
P–3.3	PLAIN END x PLAIN END WALL PIPE	BIOLOGICAL TANK INFLUENT CHAMBER, TRAIN 2	14.00	PRIMARY EFFLUENT	DUCTILE IRON	42
P–3.4	MECHANICAL JOINT x PLAIN END WALL SLEEVE	BIOLOGICAL TANK INFLUENT CHAMBER	22.00	RETURN ACTIVATED SLUDGE	DUCTILE IRON	16
P–3.5	MECHANICAL JOINT x PLAIN END WALL SLEEVE	BIOLOGICAL TANK INFLUENT CHAMBER	22.00	RETURN ACTIVATED SLUDGE	DUCTILE IRON	20
P–3.6	FLUSH FLANGE x FLUSH FLANGE WALL PIPE	BIOLOGICAL TANK INTERNAL RECYCLE CHAMBER, TRAIN 1	23.00	INTERNAL RECYCLE	DUCTILE IRON	24
P–3.7	FLUSH FLANGE x FLUSH FLANGE WALL PIPE	BIOLOGICAL TANK INTERNAL RECYCLE CHAMBER, TRAIN 1	23.00	INTERNAL RECYCLE	DUCTILE IRON	24
P–3.8	FLUSH FLANGE x FLUSH FLANGE WALL PIPE	BIOLOGICAL TANK INTERNAL RECYCLE CHAMBER, TRAIN 1	15.50	INTERNAL RECYCLE	DUCTILE IRON	48
P–3.9	WALL SLEEVE	BIOLOGICAL TANK INTERNAL RECYCLE CHAMBER, TRAIN 1	31.00	FOAM SPRAY	PVC	3
P–3.10	CONCRETE BOX OUT	BIOLOGICAL TANK INTERNAL RECYCLE CHAMBER, TRAIN 1	13.35	INTERNAL RECYCLE	N/A	42 x 42
P–3.11	FLUSH FLANGE x FLUSH FLANGE WALL PIPE	BIOLOGICAL TANK INTERNAL RECYCLE CHAMBER, TRAIN 2	23.00	INTERNAL RECYCLE	DUCTILE IRON	24
P–3.12	FLUSH FLANGE x FLUSH FLANGE WALL PIPE	BIOLOGICAL TANK INTERNAL RECYCLE CHAMBER, TRAIN 2	23.00	INTERNAL RECYCLE	DUCTILE IRON	24
P–3.13	FLUSH FLANGE x PLAIN END WALL PIPE	BIOLOGICAL TANK INTERNAL RECYCLE CHAMBER, TRAIN 2	15.50	INTERNAL RECYCLE	DUCTILE IRON	48
P–3.14	WALL SLEEVE	BIOLOGICAL TANK INTERNAL RECYCLE CHAMBER, TRAIN 2	31.00	FOAM SPRAY	PVC	3
P–3.15	CONCRETE BOX OUT	BIOLOGICAL TANK INTERNAL RECYCLE CHAMBER, TRAIN 2	13.35	INTERNAL RECYCLE	N/A	42 x 42
P–3.16	WALL SLEEVE	BIOLOGICAL TANK ANOXIC ZONE 1, TRAIN 1	31.00	FOAM SPRAY	PVC	3
P–3.17	WALL SLEEVE	BIOLOGICAL TANK ANOXIC ZONE 1, TRAIN 2	31.00	FOAM SPRAY	PVC	3
P–3.18	PIPE CAST INTO FLOOR	BIOLOGICAL TANK ANOXIC ZONE 1, TRAIN 1	9.25	SUMP DRAIN	DUCTILE IRON	6
P–3.19	PIPE CAST INTO FLOOR	BIOLOGICAL TANK ANOXIC ZONE 1, TRAIN 2	9.25	SUMP DRAIN	DUCTILE IRON	6
P–3.20	WALL SLEEVE	BIOLOGICAL TANK WEST WALL	31.00	MICRO–C	PVC	0.5
P–3.21	MECHANICAL JOINT x PLAIN END WALL PIPE	BIOLOGICAL TANK EFFLUENT WEIR, TRAIN 1	19.75	BIOLOGICAL TANK EFFULENT	DUCTILE IRON	42
P–3.22	MECHANICAL JOINT x PLAIN END WALL PIPE	BIOLOGICAL TANK EFFLUENT WEIR, TRAIN 2	19.75	BIOLOGICAL TANK EFFULENT	DUCTILE IRON	42
P–3.23	VALVE BOX TOP CAST INTO CORBEL	BIOLOGICAL TANK ANOXIC/AEROBIC SWING WALKWAY, TRAIN 1	32.00	SUMP DRAIN VALVE	CAST IRON	6
P–3.24	VALVE BOX TOP CAST INTO CORBEL	BIOLOGICAL TANK ANOXIC/AEROBIC SWING WALKWAY, TRAIN 2	32.00	SUMP DRAIN VALVE	CAST IRON	6
P–3.25	WALL SLEEVE	BIOLOGICAL TANK EAST WALL	30.75	FOAM SPRAY	DUCTILE IRON	8
P–3.26	MECHANICAL JOINT x PLAIN END WALL PIPE	SECONDARY ANOXIC TANK 1 EAST WALL	19.75	BIOLOGICAL TANK EFFLUENT	DUCTILE IRON	42
P–3.27	MECHANICAL JOINT x PLAIN END WALL PIPE	SECONDARY ANOXIC TANK 1 WEST WALL	19.75	SECONDARY ANOXIC EFFLUENT	DUCTILE IRON	42
P–3.28	MECHANICAL JOINT x PLAIN END WALL PIPE	SECONDARY ANOXIC TANK 2 EAST WALL	19.75	BIOLOGICAL TANK EFFLUENT	DUCTILE IRON	42
P–3.29	MECHANICAL JOINT x PLAIN END WALL PIPE	SECONDARY ANOXIC TANK 2 WEST WALL	19.75	SECONDARY ANOXIC EFFLUENT	DUCTILE IRON	42
P–3.30	MECHANICAL JOINT x PLAIN END WALL PIPE	RE–AERATION TANK 1 INFLUENT CHAMBER	19.75	SECONDARY ANOXIC EFFLUENT	DUCTILE IRON	42
P–3.31	MECHANICAL JOINT x PLAIN END WALL PIPE	RE–AERATION TANK 2 INFLUENT CHAMBER	19.75	SECONDARY ANOXIC EFFLUENT	DUCTILE IRON	42
P–3.32	CONCRETE BOX OUT EXPANSION	RE–AERATION TANK 1 EFFLUENT CHAMBER	18.77	AERATION TANK EFFLUENT	N/A	36 x 42
P–3.33	MECHANICAL JOINT x PLAIN END WALL PIPE	RE–AERATION TANK 1 EFFLUENT CHAMBER	19.75	AERATION TANK EFFLUENT	DUCTILE IRON	42
P–3.34	CONCRETE BOX OUT EXPANSION	RE–AERATION TANK 2 EFFLUENT CHAMBER	18.77	AERATION TANK EFFLUENT	N/A	36 x 42
P–3.35	MECHANICAL JOINT x PLAIN END WALL PIPE	RE–AERATION TANK 2 EFFLUENT CHAMBER	19.75	AERATION TANK EFFLUENT	DUCTILE IRON	42
P–3.36	CONCRETE BOX OUT EXPANSION	RE–AERATION TANK 1	26.39	FOAM SLOT	N/A	46 x 9
P–3.37	CONCRETE BOX OUT EXPANSION	RE–AERATION TANK 1	26.39	FOAM SLOT	N/A	46 x 9
P–3.38	CONCRETE BOX OUT EXPANSION	RE–AERATION TANK 1	26.39	FOAM SLOT	N/A	46 x 9
P–3.39	CONCRETE BOX OUT EXPANSION	RE–AERATION TANK 1	26.39	FOAM SLOT	N/A	46 x 9
P–3.40	CONCRETE BOX OUT EXPANSION	RE–AERATION TANK 2	26.39	FOAM SLOT	N/A	46 x 9
P–3.41	CONCRETE BOX OUT EXPANSION	RE–AERATION TANK 2	26.39	FOAM SLOT	N/A	46 x 9
P–3.42	CONCRETE BOX OUT EXPANSION	RE–AERATION TANK 2	26.39	FOAM SLOT	N/A	46 x 9
P–3.43	CONCRETE BOX OUT EXPANSION	RE–AERATION TANK 2	26.39	FOAM SLOT	N/A	46 x 9
P–3.44	PIPE SLEEVE	RE–AERATION TANK 1	31.61	AIR	STAINLESS STEEL	4
P–3.45	PIPE SLEEVE	RE–AERATION TANK 1	31.61	AIR	STAINLESS STEEL	4
P–3.46	PIPE SLEEVE	RE–AERATION TANK 1	31.61	AIR	STAINLESS STEEL	4
P–3.47	PIPE SLEEVE	RE–AERATION TANK 2	31.61	AIR	STAINLESS STEEL	4
P–3.48	PIPE SLEEVE	RE–AERATION TANK 2	31.61	AIR	STAINLESS STEEL	4
P–3.49	PIPE SLEEVE	RE–AERATION TANK 2	31.61	AIR	STAINLESS STEEL	4
P–3.50	MECHANICAL JOINT x FLUSH FLANGE WALL PIPE	FINAL CLARIFIER FLOW DISTRIBUTION STRUCTURE	13.67	AERATION TANK EFFLUENT	DUCTILE IRON	48
P–3.51	MECHANICAL JOINT x PLAIN END WALL PIPE	FINAL CLARIFIER FLOW DISTRIBUTION STRUCTURE	15.52	AERATION TANK EFFLUENT	DUCTILE IRON	42
P–3.52	MECHANICAL JOINT x PLAIN END WALL PIPE	FINAL CLARIFIER FLOW DISTRIBUTION STRUCTURE	15.52	AERATION TANK EFFLUENT	DUCTILE IRON	42
P–4.1	WALL SLEEVE	SECONDARY SLUDGE PUMP STATION NO. 2	14.50	RETURN ACTIVATED SLUDGE	DUCTILE IRON	20
P–4.2	MECHANICAL JOINT x PLAIN END WALL PIPE	SECONDARY SLUDGE PUMP STATION NO. 2	14.50	RETURN ACTIVATED SLUDGE	DUCTILE IRON	20

REFER TO S–X FOR CORRESPONDING PENETRATION DETAILS.

PREPARED BY

BETA
www.BETA-Inc.com

REGISTERED PROFESSIONAL

COMMONWEALTH OF MASSACHUSETTS
TODD M. WARZECKI
CIVIL ENGINEER
No. 47367
REGISTERED PROFESSIONAL ENGINEER

SUBCONSULTANT

PROJECT

Taunton Wastewater Treatment Facility Improvements Phase 2

TAUNTON, MA

TITLE

Structural Notes (2 of 2)

NO.	REVISIONS	DATE

DRAWN BY:	BN
DESIGNED BY:	BN
CHECKED BY:	TMW
ISSUE DATE:	3/31/2022
BETA JOB NO.:	6050

SCALE

AS SHOWN

UNLESS OTHERWISE NOTED OR CHANGED BY REPRODUCTION

SHEET NO.

SG-2

3/31/2022 11:42 AM N:\6000S\6050 - TAUNTON WWTF\DRAWING FILES\PLANSET\PHASE 2\6050_SG2 - P2.DWG (BETA STB BW.STB)

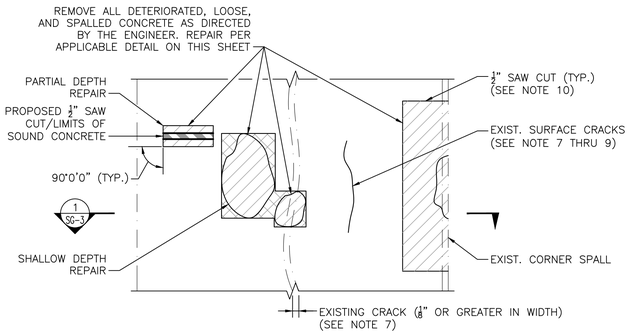

GENERAL PLAN

NOT TO SCALE

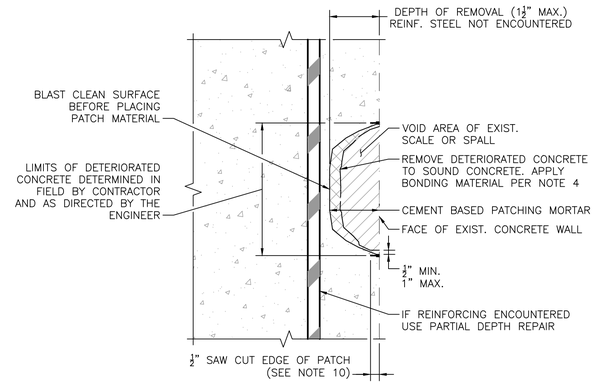

SHALLOW DEPTH REPAIR DETAIL

NOT TO SCALE

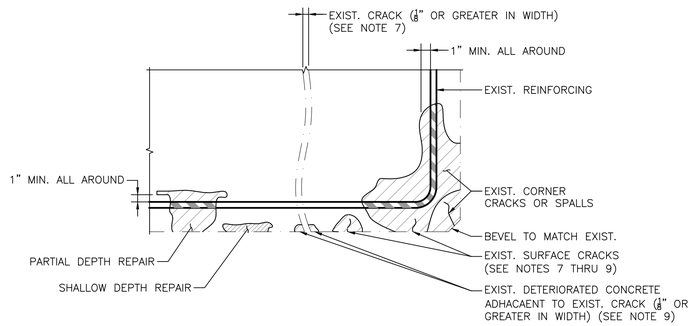

SECTION

SCALE: ¼" = 1'-0" (1 / SG-3)

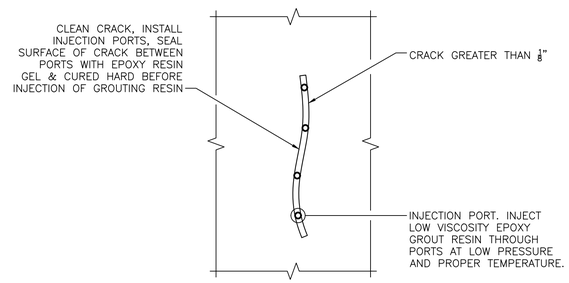

CRACK REPAIR

NOT TO SCALE

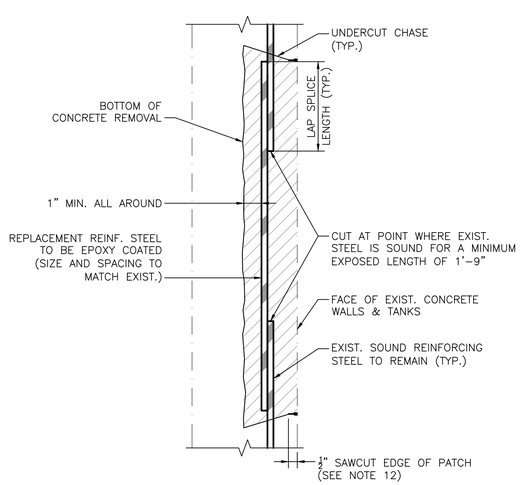

NOTE:

1. THIS DETAIL SHALL BE USED IF THE CONTRACTOR DAMAGES EXISTING REINFORCING TO THE EXTENT THAT THE REINFORCING REQUIRES REPLACEMENT, OR EXISTING STEEL REINFORCING EXHIBITS SECTION LOSS > 15%

REINFORCING REPLACEMENT DETAIL

NOT TO SCALE

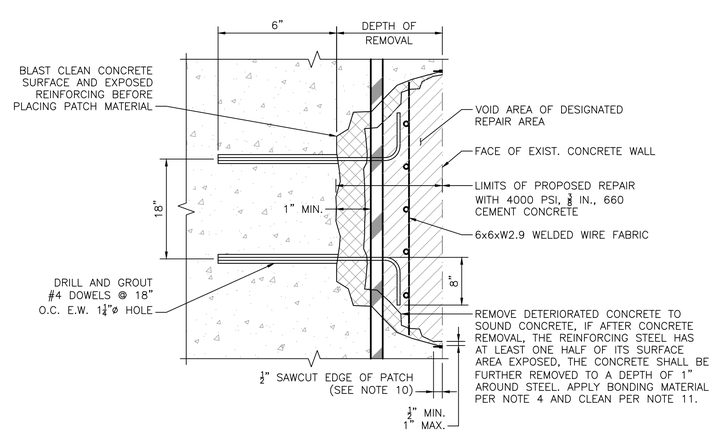

PARTIAL DEPTH REPAIR DETAIL

NOT TO SCALE

CONCRETE REPAIR NOTES:

1. THE ACTUAL LOCATIONS AND EXTENT OF VARIOUS TYPES OF CONCRETE REPAIR WILL BE DETERMINED IN THE FIELD BY THE CONTRACTOR. THE CONTRACTOR SHALL REPAIR ALL AREAS DETERMINED NECESSARY AS DIRECTED BY THE ENGINEER AFTER THE CONTRACTOR HAS SOUNDED AND MARKED OUT ALL REPAIR AREAS.

2. IF DURING REMOVAL OF DETERIORATED CONCRETE, THE CONTRACTOR DAMAGES EXISTING REINFORCEMENT TO THE EXTENT REQUIRING REPLACEMENT, ANY ADDITIONAL CONCRETE REMOVAL, PATCHING MATERIAL, CLEANING EXISTING REINFORCING STEEL, AND FURNISHING AND INSTALLING REPLACEMENT REINFORCING STEEL SHALL BE AT THE CONTRACTOR'S EXPENSE, AND INSTALLED ACCORDING TO REINFORCING REPLACEMENT DETAIL ON THIS SHEET.

3. REINFORCEMENT, INCLUDING WELDED WIRE FABRIC, USED TO REPLACE EXISTING DETERIORATED REINFORCING STEEL (SECTION LOSS OF 15% OR MORE OF THE ORIGINAL CROSS SECTION, AS CONFIRMED BY THE ENGINEER) SHALL BE EPOXY COATED. COST OF REPLACEMENT SHALL BE INCLUDED AS PART OF THE CONCRETE REPAIR WORK.

4. IMMEDIATELY PRIOR TO PLACING NEW PATCHING MORTAR AGAINST EXISTING CONCRETE, CLEAN EXISTING SURFACES BY ABRASIVE BLASTING OR HIGH PRESSURE WATER BLASTING WITH WATER CONTAINING NO DETERGENTS OR BOND INHIBITING CHEMICALS AND APPLY APPROVED BONDING COMPOUND IMMEDIATELY PRIOR TO PLACING CONCRETE.

5. ALL EXISTING SURFACES THAT WILL HAVE NEW CONCRETE CAST AGAINST IT MUST BE ROUGHENED TO A MINIMUM AMPLITUDE OF ¼ INCH.

6. CONCRETE REPAIR WORK INCLUDES REMOVING ALL DETERIORATED, LOOSE, SPALLED, POPCORNED AND MAP CRACKED CONCRETE. CONCRETE WHICH HAS SPALLED OR OTHERWISE DETERIORATED ADJACENT TO SURFACE CRACK SHALL BE REPAIRED.

7. CRACKS THAT ARE 1/8" OR GREATER IN WIDTH SHALL BE REPAIRED BY EPOXY INJECTION CRACK REPAIR.

8. CRACKS THAT ARE LESS THAN 1/8" IN WIDTH SHALL NOT BE REPAIRED UNLESS DIRECTED BY THE ENGINEER.

9. WHERE PATCHING AND EPOXY INJECTION WORK ARE ADJACENT, EPOXY INJECTION SHALL BE PERFORMED BEFORE PATCHING.

10. ALL DETERIORATED AREAS SHALL BE DELINEATED BY A ½" SAWCUT. THE COST OF SAWCUTTING SHALL BE INCIDENTAL TO THE CONCRETE REPAIR WORK.

11. ALL EXPOSED STEEL SHALL BE THOROUGHLY BLAST CLEANED TO A WHITE METAL FINISH AND COATED WITH EPOXY IN ACCORDANCE WITH ASTM D3963. BLAST CLEANING AND EPOXY SHALL BE INCLUDED IN THE RESPECTIVE CONCRETE REPAIR ITEM.

12. ALL SURFACES SHALL BE RUBBED TO PRODUCE A SMOOTH FINISH. NO ADDITIONAL MATERIAL SHALL BE ADDED TO CONCRETE.

13. AFTER SURFACE PREPARATION HAS BEEN ACCEPTED, EFFORT SHOULD BE MADE TO THOROUGHLY WET THE CONCRETE SURFACE.

14. COST OF DRILLING AND GROUTING DOWELS FOR PARTIAL DEPTH REPAIRS SHALL BE CONSIDERED INCIDENTAL TO CONCRETE REHABILITATION.

LEGEND:

- DETERIORATED CONCRETE TO BE REMOVED.
- REINFORCING STEEL.
- ADDITIONAL CONCRETE TO BE REMOVED.

PREPARED BY

BETA
www.BETA-Inc.com

REGISTERED PROFESSIONAL

COMMONWEALTH OF MASSACHUSETTS
TODD M. WARZECKI
CIVIL ENGINEER
No. 47367
REGISTERED PROFESSIONAL ENGINEER

SUBCONSULTANT

PROJECT

Taunton Wastewater Treatment Facility Improvements Phase 2

TAUNTON, MA

TITLE

Concrete Repair Details

NO.	REVISIONS	DATE

DRAWN BY:	BN
DESIGNED BY:	BN
CHECKED BY:	TMW
ISSUE DATE:	3/31/2022
BETA JOB NO.:	6050

SCALE

AS SHOWN

UNLESS OTHERWISE NOTED OR CHANGED BY REPRODUCTION

SHEET NO. SG-3

3/31/2022 11:42 AM N:\6000S\6050 - TAUNTON WWTP\DRAWING FILES\PLANSET\PHASE 2\6050_SG3 - P2.DWG (BETA STB BW.STB)

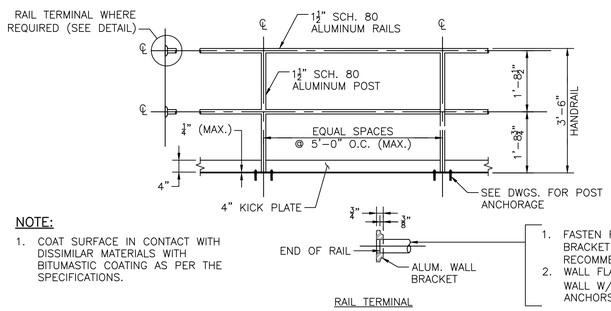

NOTE:

1. COAT SURFACE IN CONTACT WITH DISSIMILAR MATERIALS WITH BITUMASTIC COATING AS PER THE SPECIFICATIONS.

1. FASTEN RAIL TERMINAL TO WALL BRACKET PER MFR'S RECOMMENDATIONS.
2. WALL FLANGE TO BE MOUNTED TO WALL W/ (2)-⅜"ø S.S. EPOXY ANCHORS.

TWO-BAR HANDRAIL

SCALE": ½" = 1'-0"

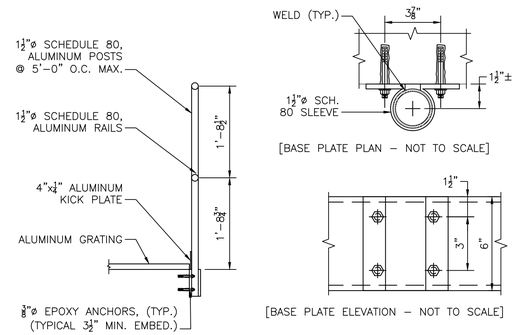

FACE MOUNTED HANDRAIL DETAIL

SCALE": ¾" = 1'-0"

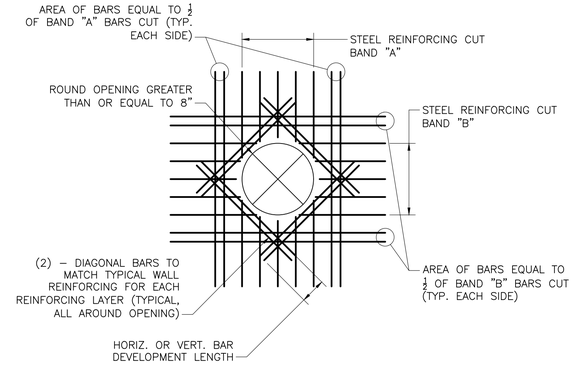

[ROUND]

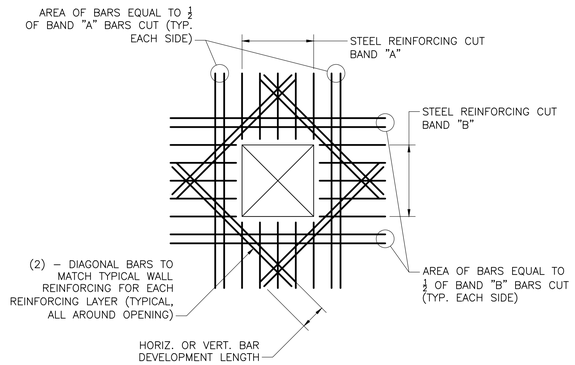

[SQUARE]

TYPICAL PENETRATION DETAIL

NOT TO SCALE

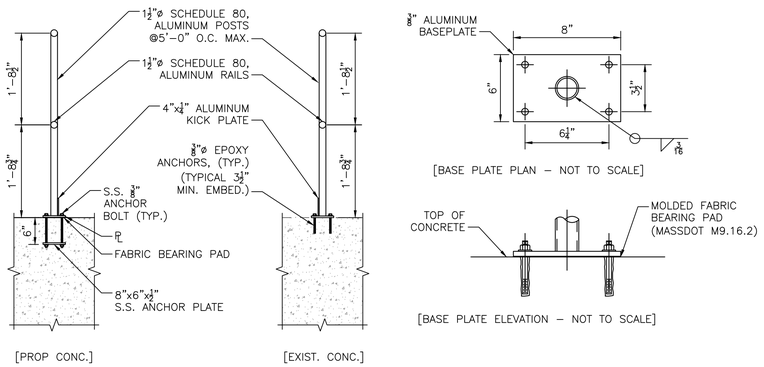

TOP MOUNTED HANDRAIL DETAIL – CONCRETE

SCALE": ¾" = 1'-0"

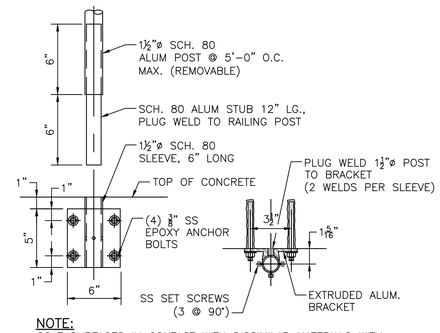

NOTE:
COAT SURFACES IN CONTACT WITH DISSIMILAR MATERIALS WITH BITUMASTIC OR COATINGS AS PER SPECIFICATIONS.

REMOVABLE HANDRAIL POST ANCHORAGE

NOT TO SCALE

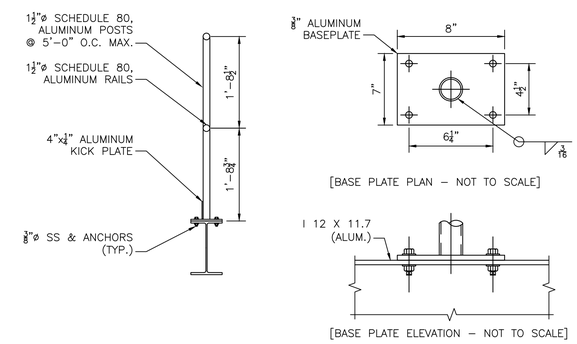

NOTE:

1. CUT GRATING AS REQUIRED FOR POST BASE PLATE LOCATIONS.

TOP MOUNTED HANDRAIL DETAIL – I-BEAM

SCALE": ¾" = 1'-0"

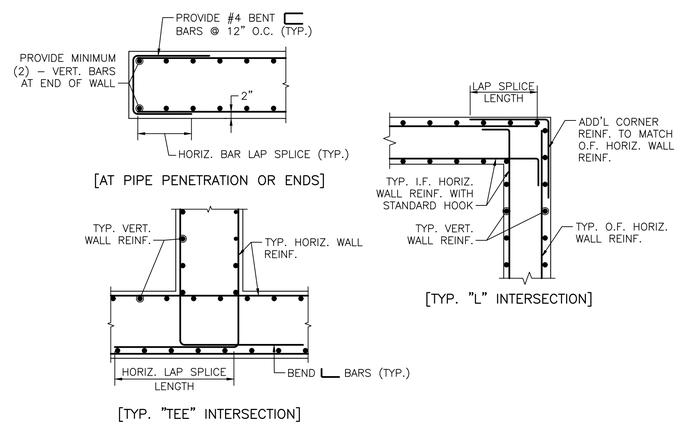

TYPICAL REINFORCING DETAILS

SCALE: ⅜" = 1'-0"

EXPANSION JOINT DETAIL

NOT TO SCALE

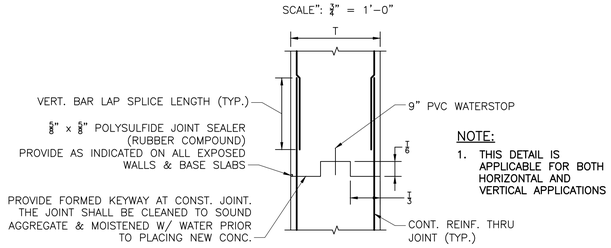

NOTE:

1. THIS DETAIL IS APPLICABLE FOR BOTH HORIZONTAL AND VERTICAL APPLICATIONS

TYPICAL CONST. JOINT / PVC WATERSTOP DETAIL

SCALE: ½" = 1'-0"

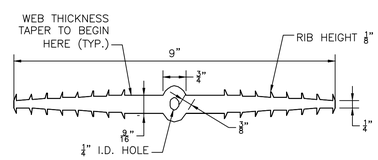

9" WATERSTOP

SCALE: 6" = 1'-0"

PREPARED BY

BETA
www.BETA-Inc.com

REGISTERED PROFESSIONAL

COMMONWEALTH OF MASSACHUSETTS
TODD M. WARZECKI
CIVIL ENGINEER
No. 47367
REGISTERED PROFESSIONAL ENGINEER

SUBCONSULTANT

PROJECT

Taunton Wastewater Treatment Facility Improvements Phase 2

TAUNTON, MA

TITLE

Miscellaneous Details (1 of 2)

NO.	REVISIONS	DATE

DRAWN BY:	BN
DESIGNED BY:	BN
CHECKED BY:	TMW
ISSUE DATE:	3/31/2022
BETA JOB NO.:	6050

SCALE

AS SHOWN

UNLESS OTHERWISE NOTED OR CHANGED BY REPRODUCTION

SHEET NO. SG-4

3/31/2022 11:43 AM N:\6000S\6050 - TAUNTON WWTF\DRAWING FILES\PLANSET\PHASE 2\6050_SG4 - P2.DWG (BETA STB BW.STB)

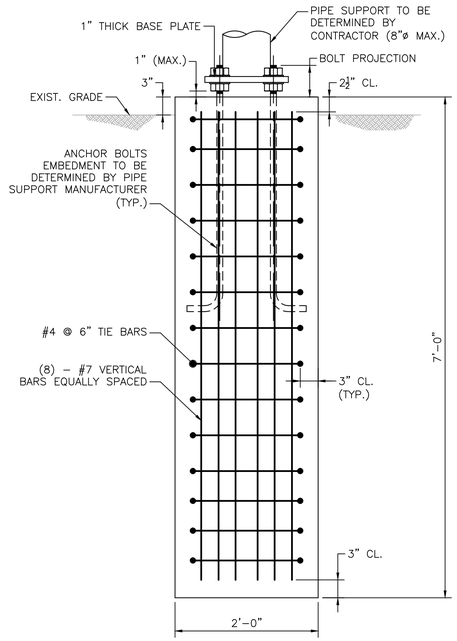

PIPE SUPPORT FOUNDATION ELEVATION

SCALE: 1" = 1'–0"

NOTES:

1. CONTRACTOR TO PROVIDE SUPPORT BASE REACTIONS.
2. CONTRACTOR TO CHECK CONCRETE BREAKOUT OF NEW ANCHOR BOLTS AFTER SIZE AND EMBEDMENT IS DETERMINED.
3. IF BASE REACTIONS EXCEED DESIGN VALUES SHOWN IN TABLE, IT WILL BE THE CONTRACTOR'S RESPONSIBILITY TO DESIGN AND DETAIL THE APPROPRIATE FOOTING.
4. REACTIONS ARE BASED ON A SUPPORT SPACING OF 15'–0" MAXIMUM.

DESIGN BASE REACTIONS	
MOMENT	40.74 K–FT
SHEAR	2.41 KIPS

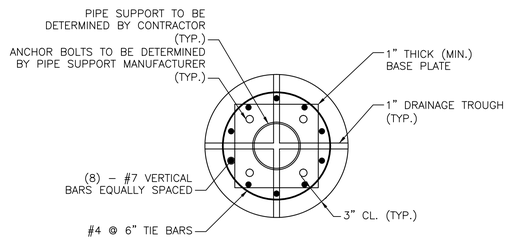

PIPE SUPPORT FOUNDATION PLAN

SCALE: 1" = 1'–0"

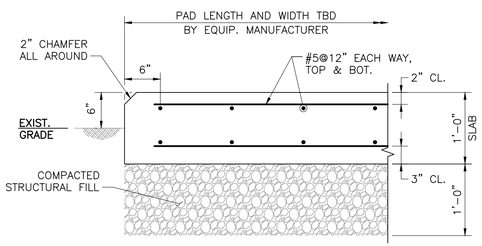

EQUIPMENT/FUEL TANK PAD DETAIL

SCALE: 1"=1'–0"

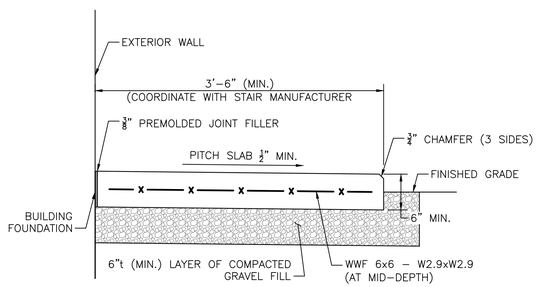

CONCRETE STAIRWAY LANDING DETAIL

NOT TO SCALE

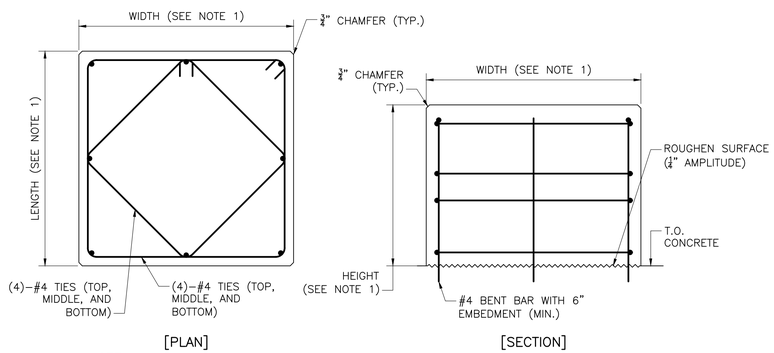

NOTE:

1. HEIGHT AND WIDTH OF EQUIPMENT PEDESTAL TO BE PROVIDED BY EQUIPMENT MANUFACTURER.

EQUIPMENT PEDESTAL

NOT TO SCALE

PREPARED BY

BETA
www.BETA-Inc.com

REGISTERED PROFESSIONAL

COMMONWEALTH OF MASSACHUSETTS
TODD M. WARZECKI
CIVIL ENGINEER
No. 47367
REGISTERED PROFESSIONAL ENGINEER

SUBCONSULTANT

PROJECT

Taunton Wastewater Treatment Facility Improvements Phase 2

TAUNTON, MA

TITLE

Miscellaneous Details (2 of 2)

NO.	REVISIONS	DATE

DRAWN BY:	BN
DESIGNED BY:	BN
CHECKED BY:	TMW
ISSUE DATE:	3/31/2022
BETA JOB NO.:	6050

SCALE

AS SHOWN

UNLESS OTHERWISE NOTED OR CHANGED BY REPRODUCTION

SHEET NO.

SG-5

3/31/2022 11:43 AM N:\6000S\6050 - TAUNTON WWTP\DRAWING FILES\PLANSET\PHASE 2\6050_SG5 - P2.DWG (BETA STB BW.STB)

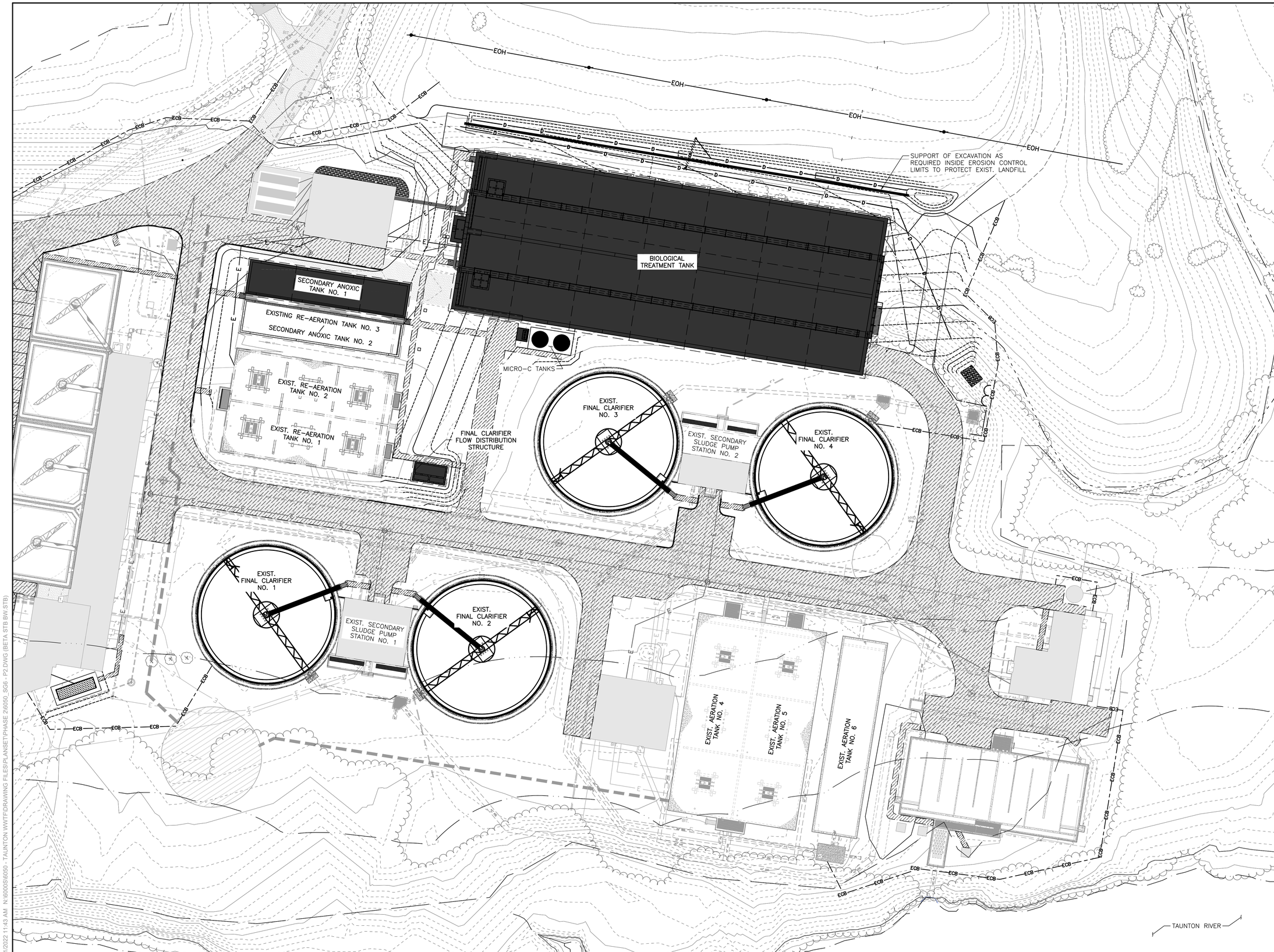

3/31/2022 11:43 AM N:\6000\6050 - TAUNTON WWTF\DRAWING FILES\PLANSET\PHASE 2\6050_SG6 - P2.DWG (BETA STB BW.STB)

PREPARED BY

BETA
www.BETA-Inc.com

REGISTERED PROFESSIONAL

COMMONWEALTH OF MASSACHUSETTS
TODD M. WARZECKI
CIVIL ENGINEER
No. 47367
REGISTERED PROFESSIONAL ENGINEER

SUBCONSULTANT

PROJECT

Taunton Wastewater Treatment Facility Improvements Phase 2

TAUNTON, MA

TITLE

Phase 2 Site Plan

NO.	REVISIONS	DATE

DRAWN BY:	BN
DESIGNED BY:	BN
CHECKED BY:	TMW
ISSUE DATE:	3/31/2022
BETA JOB NO.:	6050

SCALE

AS SHOWN

UNLESS OTHERWISE NOTED OR CHANGED BY REPRODUCTION

SHEET NO.

SG-6

NOTES:

1. ALUM. GRATING AND HANDRAILS NOT SHOWN FOR CLARITY. SEE DETAIL A ON SHEET S-3.2.

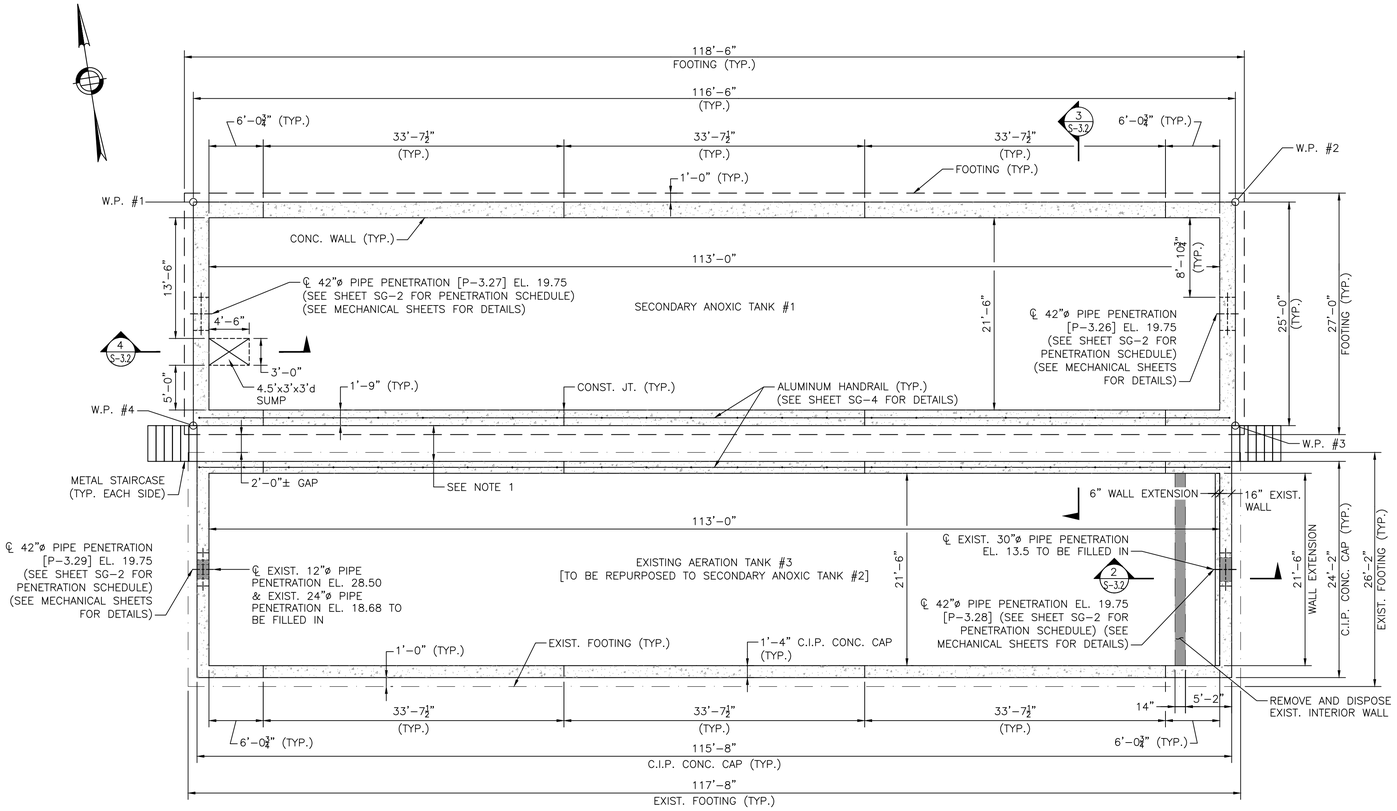

GENERAL PLAN

SCALE: 1/8" = 1'-0"

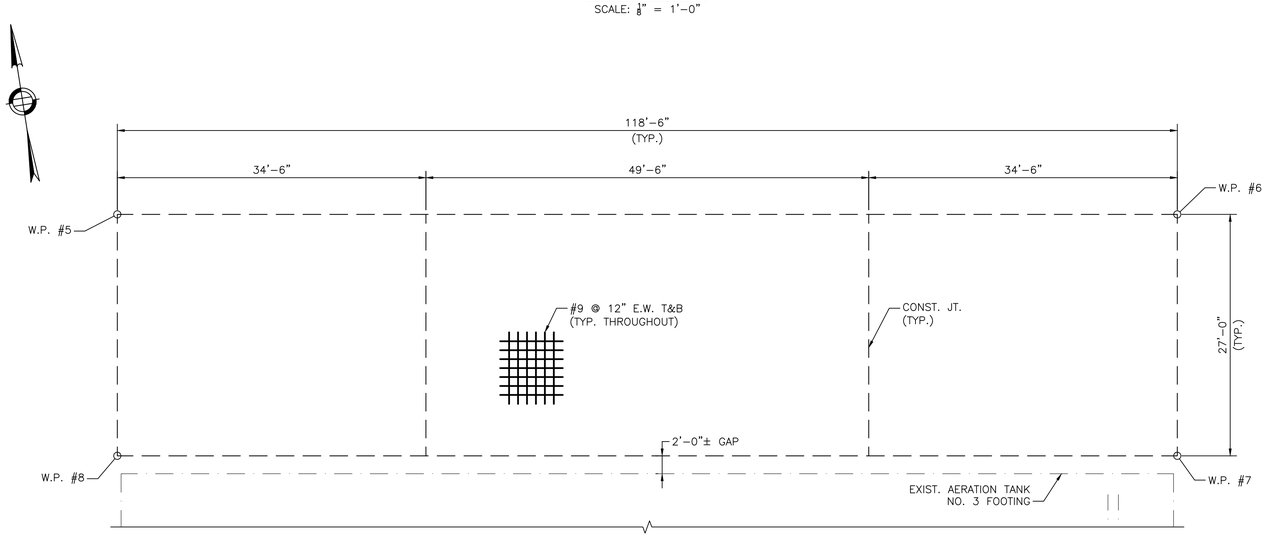

SECONDARY ANOXIC TANK #1 FOOTING PLAN

SCALE: 1/8" = 1'-0"

	NORTHING	EASTING
W.P. #1	2779459.88	765855.29
W.P. #2	2779441.88	765970.39
W.P. #3	2779417.18	765966.53
W.P. #4	2779435.18	765851.43
W.P. #5	2779461.03	765854.46
W.P. #6	2779442.71	765971.53
W.P. #7	2779416.04	765967.36
W.P. #8	2779434.35	765850.28

PREPARED BY

BETA
www.BETA-Inc.com

REGISTERED PROFESSIONAL

COMMONWEALTH OF MASSACHUSETTS
TODD M. WARZECKI
CIVIL ENGINEER
No. 47367
REGISTERED PROFESSIONAL ENGINEER

SUBCONSULTANT

PROJECT

Taunton Wastewater Treatment Facility Improvements Phase 2

TAUNTON, MA

TITLE

Secondary Anoxic Tank #1 & #2 Plan

NO.	REVISIONS	DATE

DRAWN BY:	BN
DESIGNED BY:	BN
CHECKED BY:	TMW
ISSUE DATE:	3/31/2022
BETA JOB NO.:	6050

SCALE

AS SHOWN

UNLESS OTHERWISE NOTED OR CHANGED BY REPRODUCTION

SHEET NO.

S-3.1

3/31/2022 11:44 AM N:\6000S\6050 - TAUNTON WWTF\DRAWING FILES\PLANSET\PHASE 2\6050_SR3.1 - P2.DWG (BETA_STB.BW.STB)

NOTES:

1. THE SURFACE OF THE EXIST. CONCRETE WALL SHALL BE BLAST CLEANED, ROUGHENED, WETTED WITH CLEAN WATER, AND THEN FLUSHED WITH A MORTAR COMPOSED OF EQUAL PARTS OF THE CEMENT AND SAND SPECIFIED FOR THE NEW CONCRETE, BEFORE NEW CONCRETE IS PLACED ADJACENT THERETO. NEW CONCRETE SHALL BE PLACED BEFORE MORTAR HAS TAKEN INITIAL SET.

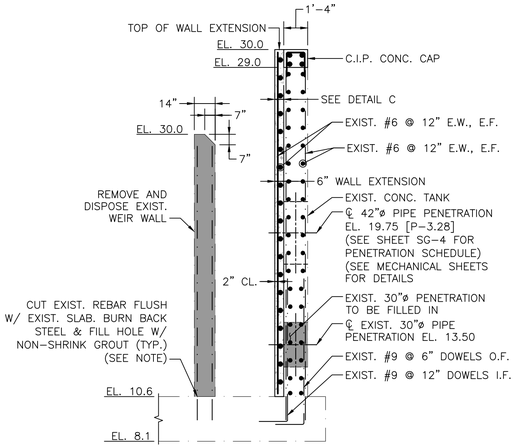

NOTE:
FOLLOW SAME PROCEDURE WITH HORIZONTAL STEEL REINF.

SECTION 2 S-3.1
SCALE: 1/4" = 1'-0"

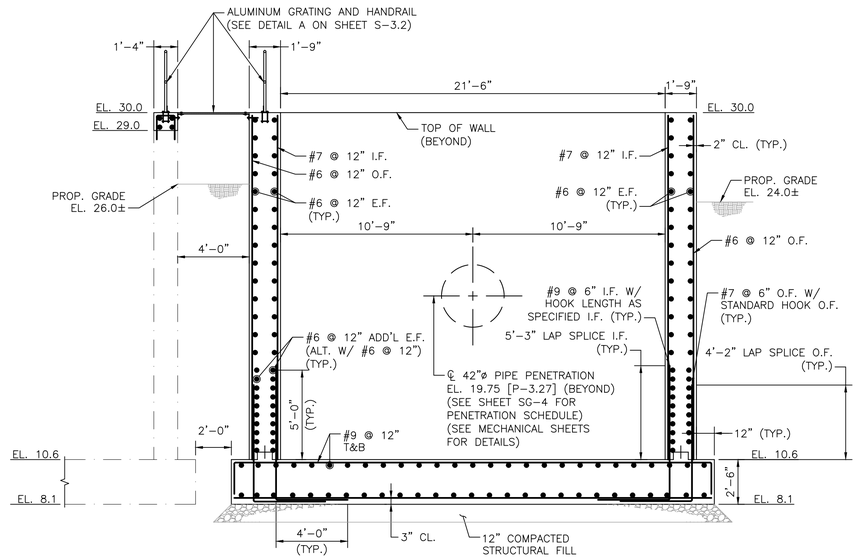

SECTION 3 S-3.1
SCALE: 1/4" = 1'-0"

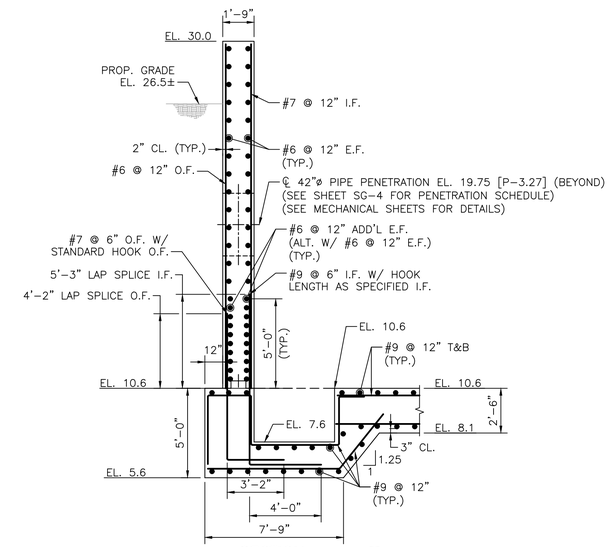

SECTION 4 S-3.1
SCALE: 1/4" = 1'-0"

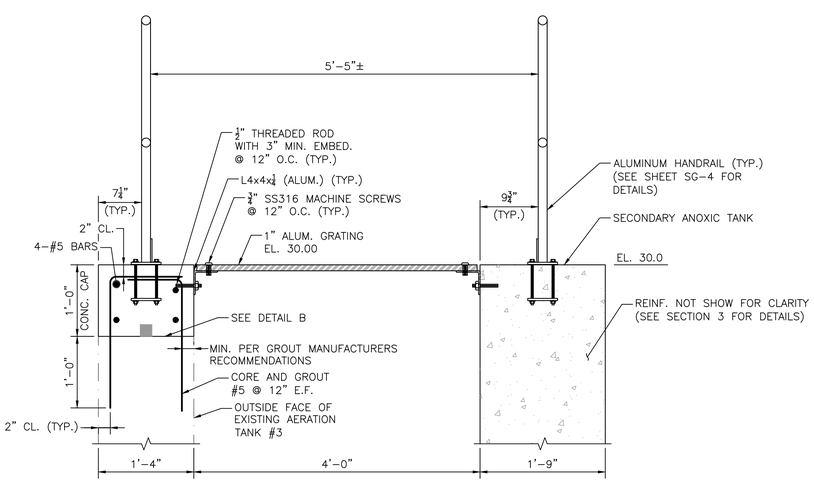

DETAIL A S-3.1
SCALE: 1" = 1'-0"

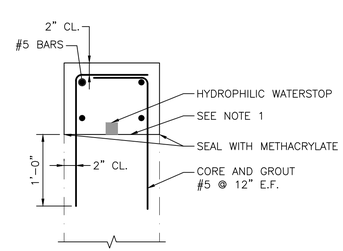

NOTE:
DETAIL TYPICAL AT ALL EXIST./NEW WALL INTERFACE.

DETAIL B S-3.2
SCALE: 1" = 1'-0"

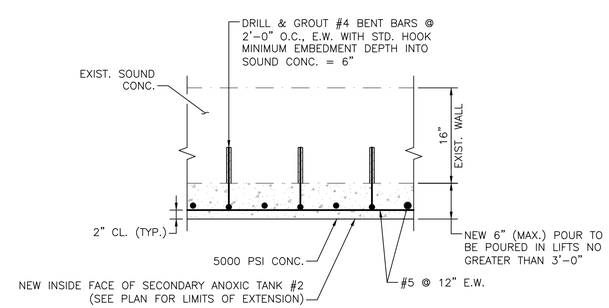

DETAIL C S-3.2
SCALE: 1" = 1'-0"

PREPARED BY

BETA
www.BETA-Inc.com

REGISTERED PROFESSIONAL

COMMONWEALTH OF MASSACHUSETTS
TODD M. WARZECKI
CIVIL ENGINEER
No. 47367
REGISTERED PROFESSIONAL ENGINEER

SUBCONSULTANT

PROJECT

Taunton Wastewater Treatment Facility Improvements Phase 2

TAUNTON, MA

TITLE

Secondary Anoxic Tank #1 & #2 Sections & Details

NO.	REVISIONS	DATE

DRAWN BY:	BN
DESIGNED BY:	BN
CHECKED BY:	TMW
ISSUE DATE:	3/31/2022
BETA JOB NO.:	6050

SCALE

AS SHOWN

UNLESS OTHERWISE NOTED OR CHANGED BY REPRODUCTION

SHEET NO.

S-3.2

3/31/2022 11:44 AM N:\6000S\6050 - TAUNTON WWTF\DRAWING FILES\PLANSET\PHASE 2\6050_SR3.2 - P2.DWG (BETA STB BW.STB)

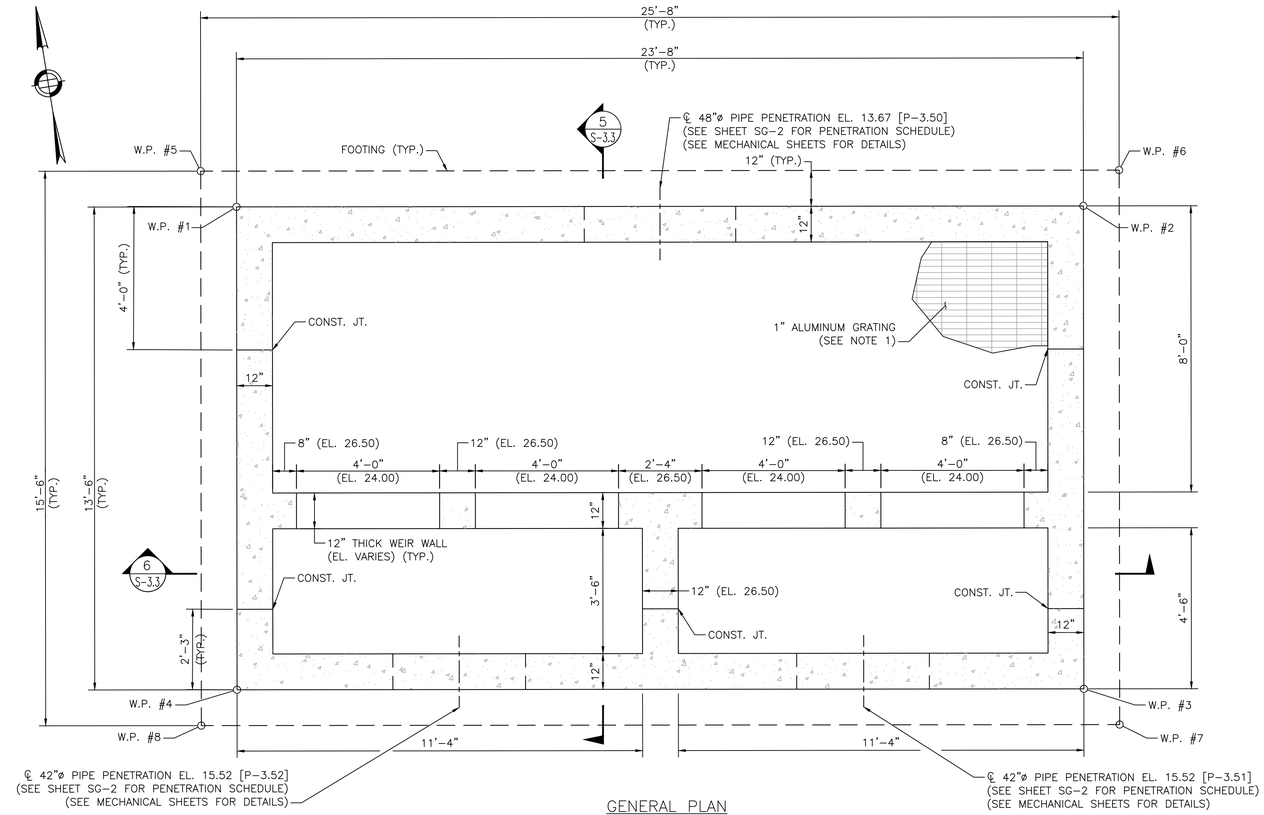

GENERAL PLAN
SCALE: ½" = 1'-0"

NOTES:

1. SEE SHEET S-3.4 FOR GRATING PLAN AND DETAILS.
2. SEE MECHANICAL SHEETS FOR FLOW GATE INFORMATION.
3. INSTALLATION OF FLOW GATES SHALL BE DONE CONCURRENTLY WITH CONSTRUCTION OF FINAL CLARIFIER FLOW DISTRIBUTION STRUCTURE. POST-INSTALLED ANCHORAGE OF FLOW GATE WILL NOT BE ALLOWED.
4. CONTRACTOR TO COORDINATE WITH FLOW GATE MANUFACTURER AS TO INSTALLATION REQUIREMENTS. IT IS THE CONTRACTORS RESPONSIBILITY TO PROVIDE FLOW GATE AND ALL MATERIALS REQUIRED FOR INSTALLATION.

	NORTHING	EASTING
W.P. #1	2779314.19	765973.68
W.P. #2	2779310.43	765997.05
W.P. #3	2779297.10	765994.89
W.P. #4	2779300.87	765971.53
W.P. #5	2779315.34	765972.85
W.P. #6	2779311.25	765998.19
W.P. #7	2779295.95	765995.72
W.P. #8	2779300.04	765970.38

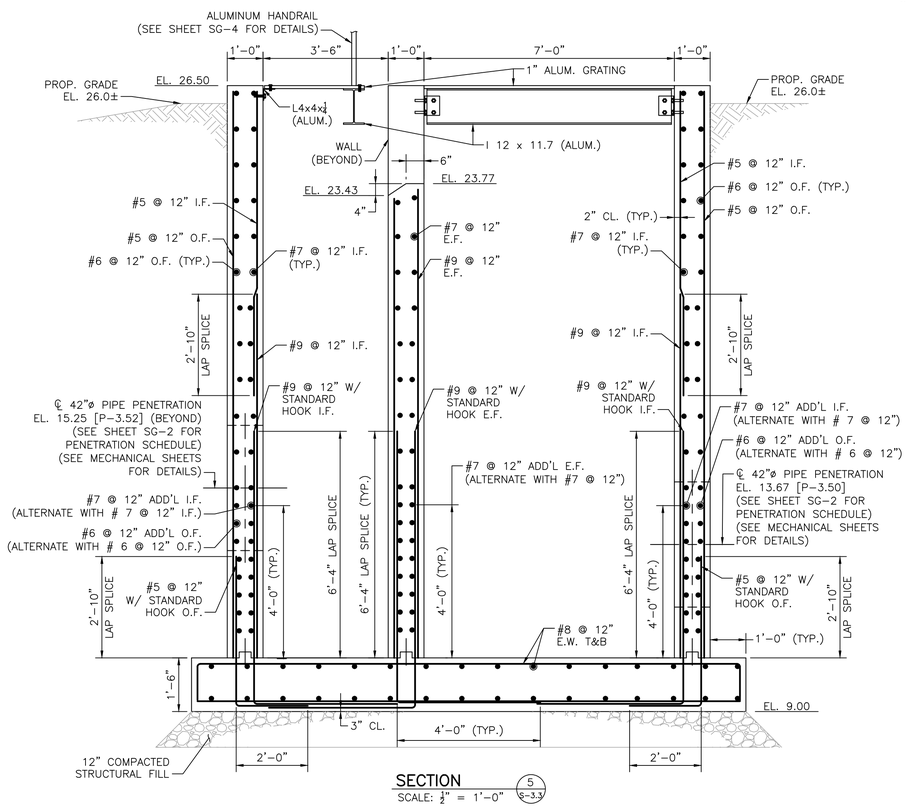

SECTION 5/S-3.3
SCALE: ½" = 1'-0"

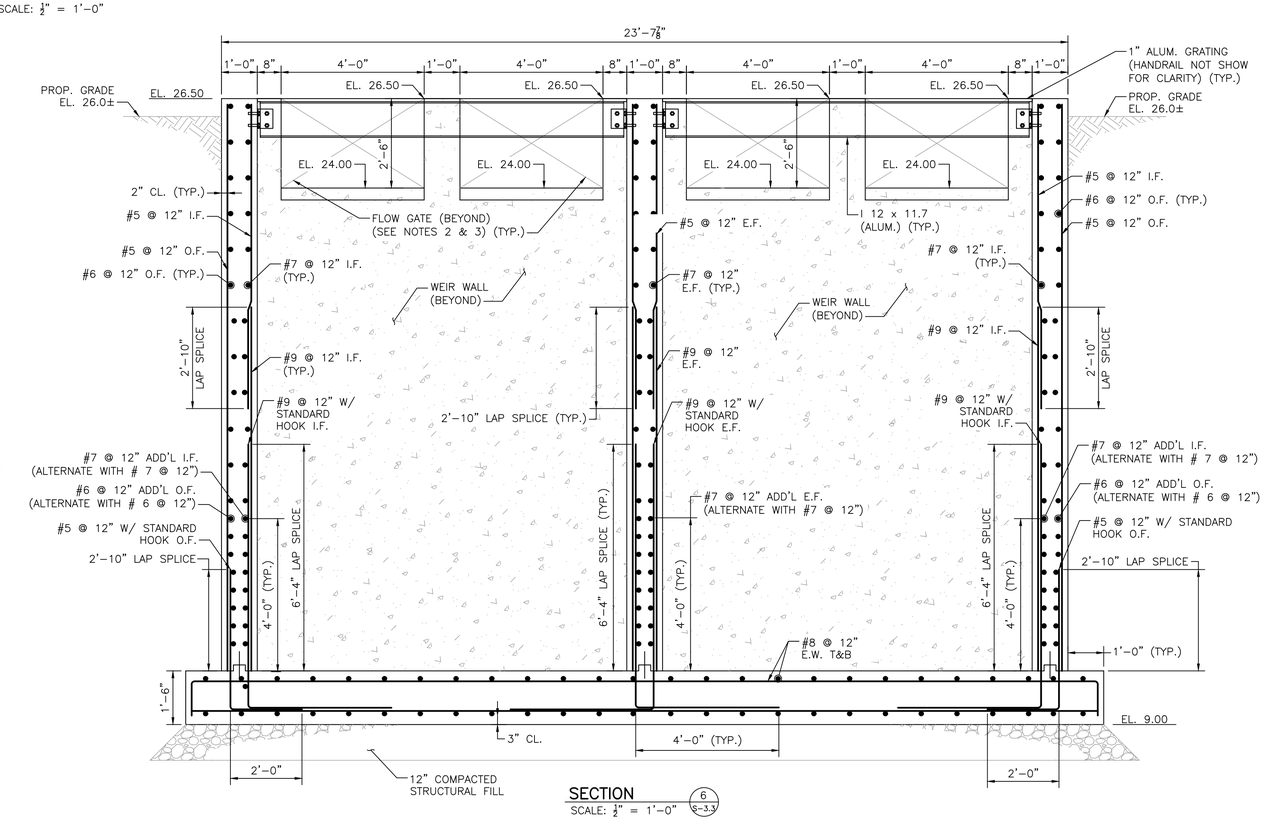

SECTION 6/S-3.3
SCALE: ½" = 1'-0"

PREPARED BY

BETA
www.BETA-Inc.com

REGISTERED PROFESSIONAL

COMMONWEALTH OF MASSACHUSETTS
TODD M. WARZECKI
CIVIL ENGINEER
No. 47367
REGISTERED PROFESSIONAL ENGINEER

SUBCONSULTANT

PROJECT

Taunton Wastewater Treatment Facility Improvements Phase 2

TAUNTON, MA

TITLE

Final Clarifier Flow Distribution Structure

NO.	REVISIONS	DATE

DRAWN BY:	BN
DESIGNED BY:	BN
CHECKED BY:	TMW
ISSUE DATE:	3/31/2022
BETA JOB NO.:	6050

SCALE

AS SHOWN

UNLESS OTHERWISE NOTED OR CHANGED BY REPRODUCTION

SHEET NO.

S-3.3

3/31/2022 11:44 AM N:\6000S\6050 - TAUNTON WWTF\DRAWING FILES\PLANSET\PHASE 2\6050_SR3.3 - P2.DWG (BETA STB BW.STB)

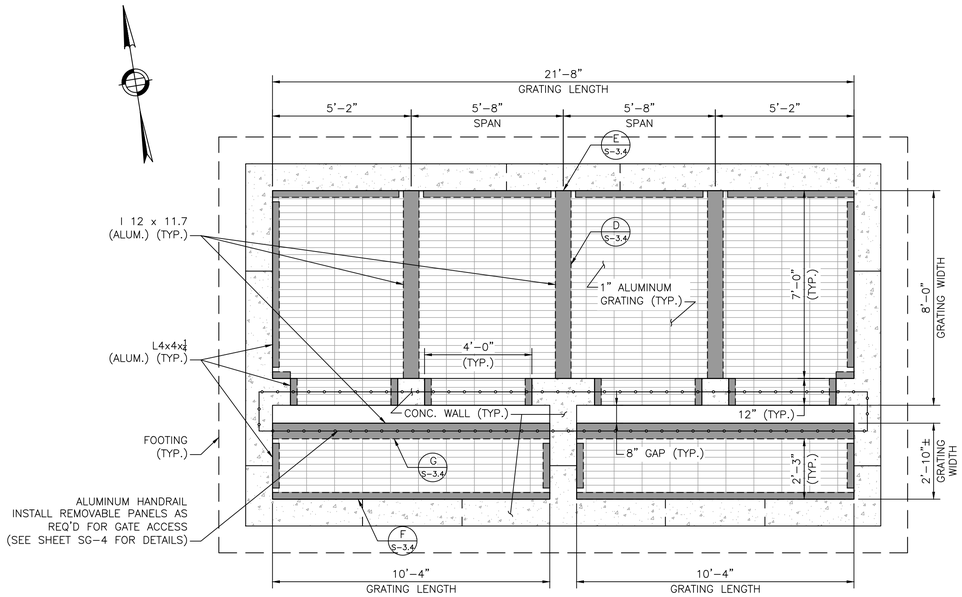

GRATING PLAN
SCALE: 3/8" = 1'-0"

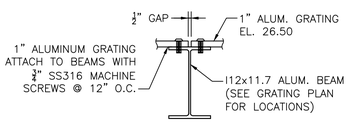

DETAIL D S-3.4
SCALE: 1" = 1'-0"

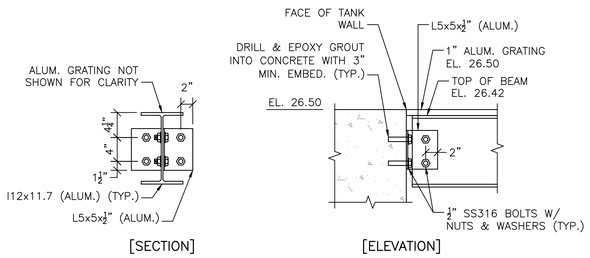

DETAIL E S-3.4
SCALE: 1" = 1'-0"

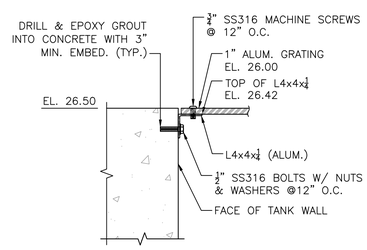

DETAIL F S-3.4
SCALE: 1" = 1'-0"

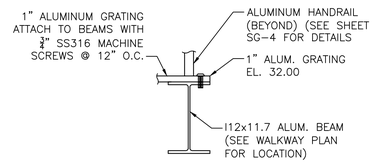

DETAIL G S-3.4
SCALE: 1" = 1'-0"

PREPARED BY

BETA
www.BETA-Inc.com

REGISTERED PROFESSIONAL

COMMONWEALTH OF MASSACHUSETTS
TODD M. WARZECKI
CIVIL ENGINEER
No. 47367
REGISTERED PROFESSIONAL ENGINEER

SUBCONSULTANT

PROJECT

Taunton Wastewater Treatment Facility Improvements Phase 2

TAUNTON, MA

TITLE

Flow Distribution Structure Grating Details

NO.	REVISIONS	DATE

DRAWN BY:	BN
DESIGNED BY:	BN
CHECKED BY:	TMW
ISSUE DATE:	3/31/2022
BETA JOB NO.:	6050

SCALE

AS SHOWN

UNLESS OTHERWISE NOTED OR CHANGED BY REPRODUCTION

SHEET NO. S-3.4

3/31/2022 11:44 AM N:\6000S\6050 - TAUNTON WWTF\DRAWING FILES\PLANSET\PHASE 2\6050_SR3.4 - P2.DWG (BETA STB BW.STB)

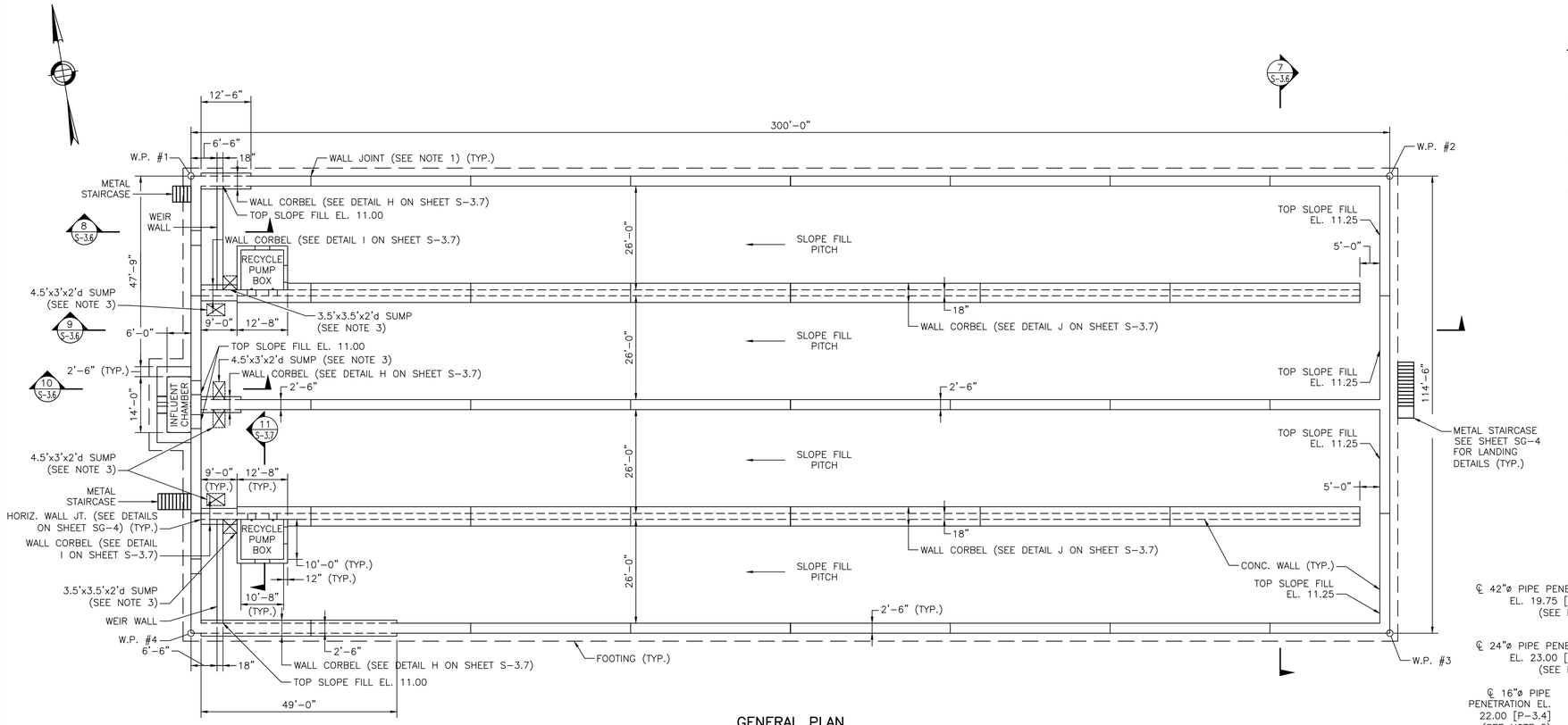

GENERAL PLAN

SCALE: $\frac{1}{16}$" = 1'-0"

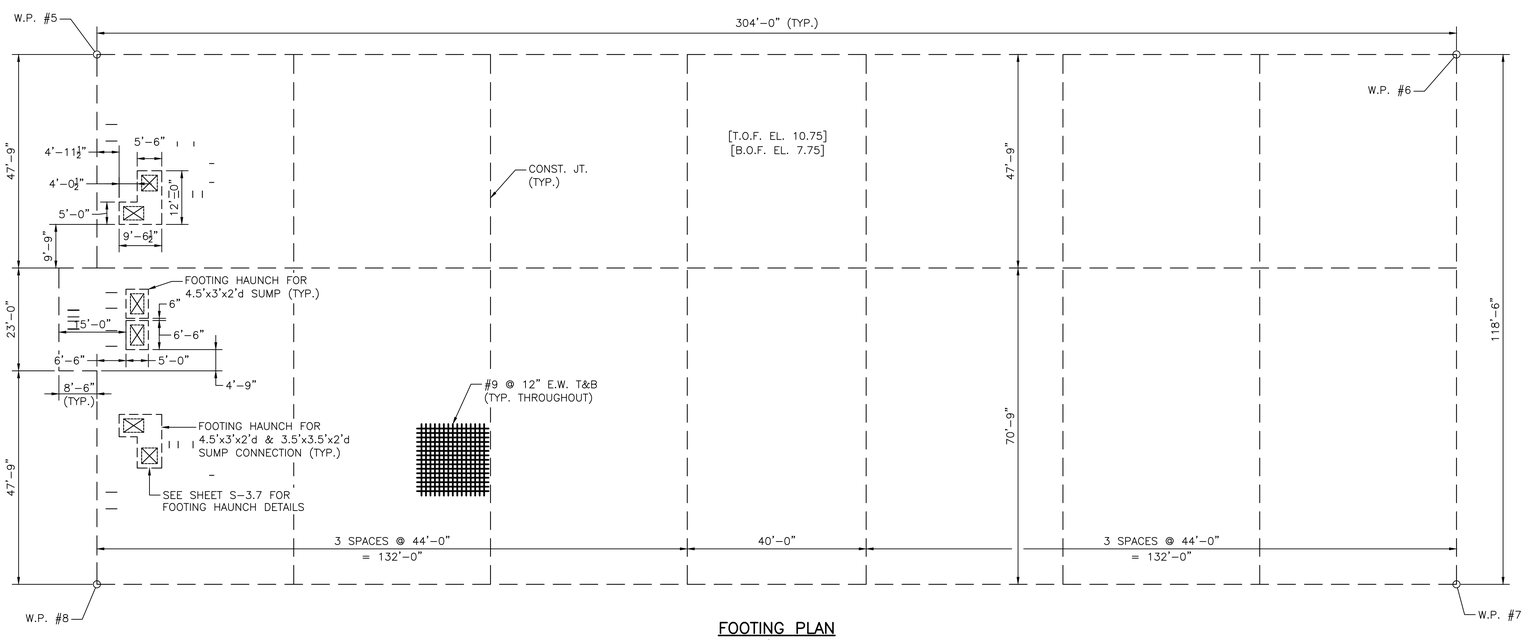

FOOTING PLAN

SCALE: $\frac{1}{16}$" = 1'-0"

NOTES:

1. WALL JOINT LOCATIONS NOT LABELED FOR CLARITY. SEE JOINT DETAIL PLAN ON SHEET S-3.7 FOR WALL JOINT LOCATIONS.
2. GRATING NOT SHOWN FOR CLARITY. SEE SHEET S-3.8 FOR GRATING LAYOUT AND SUPPORTS.
3. SUMPS NOT SHOWN FOR CLARITY. SEE SUMP PUMP PLAN ON SHEET S-3.7 FOR LOCATIONS.
4. AIR PIPE SUPPORTS (BY CONTRACTOR) NOT SHOWN FOR CLARITY. SEE PLAN ON SHEET S-3.8 FOR LAYOUT.
5. SEE SHEET SG-2 FOR PENETRATION SCHEDULE. SEE SHEET SG-4 FOR PENETRATION DETAILS. SEE MECHANICAL SHEETS FOR PIPE DETAILS.

	NORTHING	EASTING
W.P. #1	2779537.25	766018.14
W.P. #2	2779489.14	766314.25
W.P. #3	2779376.12	766295.89
W.P. #4	2779424.23	765999.77
W.P. #5	2779539.54	766016.48
W.P. #6	2779490.79	766316.55
W.P. #7	2779373.82	766297.54
W.P. #8	2779422.58	765997.48

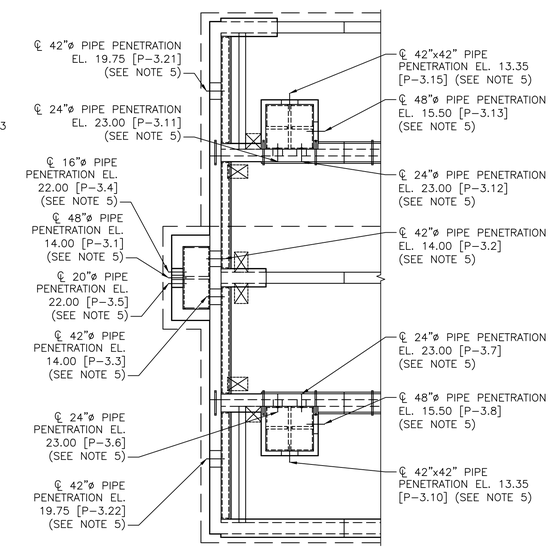

PENETRATION PLAN

SCALE: $\frac{1}{16}$" = 1'-0"

PREPARED BY

BETA
www.BETA-Inc.com

REGISTERED PROFESSIONAL

COMMONWEALTH OF MASSACHUSETTS
TODD M. WARZECKI
CIVIL ENGINEER
No. 47367
REGISTERED PROFESSIONAL ENGINEER

SUBCONSULTANT

PROJECT

Taunton Wastewater Treatment Facility Improvements Phase 2

TAUNTON, MA

TITLE

Biological Treatment Tank Plan

NO.	REVISIONS	DATE

DRAWN BY:	BN
DESIGNED BY:	BN
CHECKED BY:	TMW
ISSUE DATE:	3/31/2022
BETA JOB NO.:	6050

SCALE

AS SHOWN

UNLESS OTHERWISE NOTED OR CHANGED BY REPRODUCTION

SHEET NO.

S-3.5

3/31/2022 11:45 AM N:\6000S\6050 - TAUNTON WWTF\DRAWING FILES\PLANSET\PHASE 2\6050_SR3.5 - P2.DWG (BETA STB BW.STB)

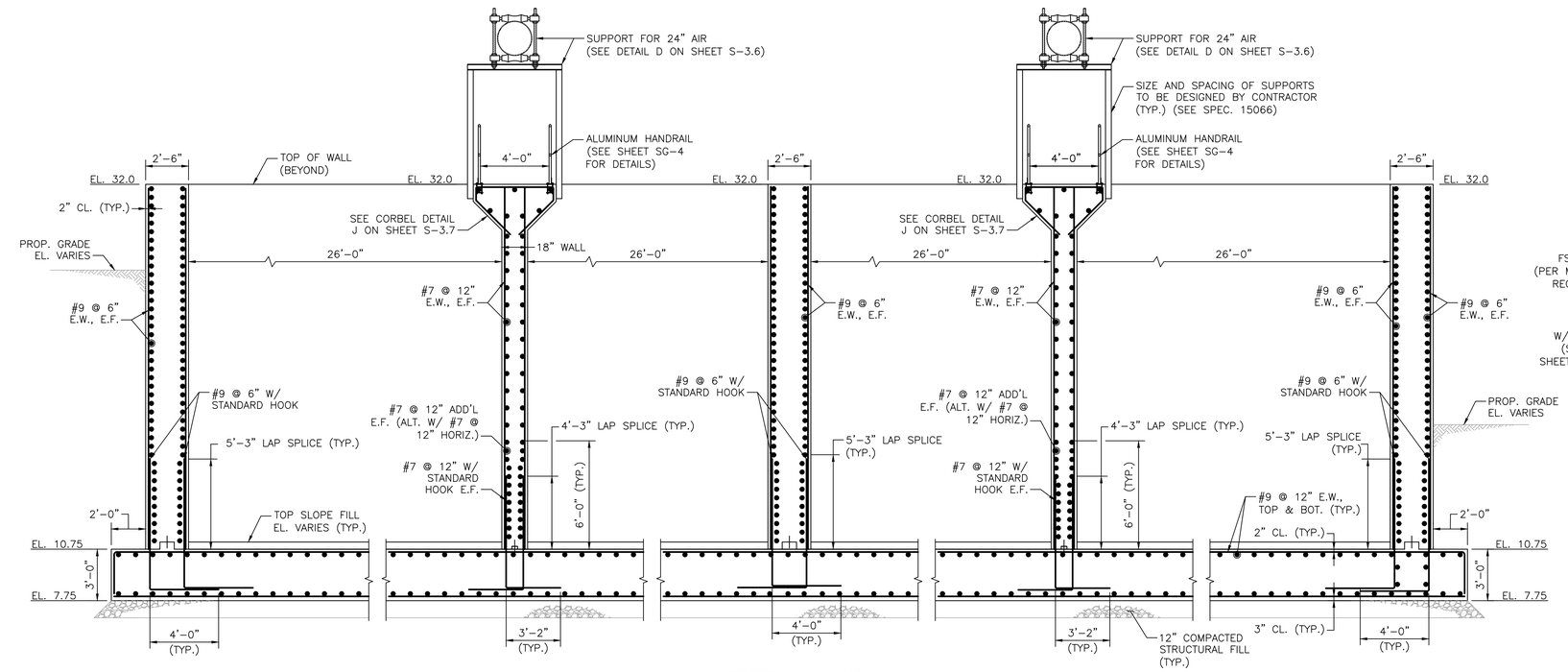

SECTION 7 / S-3.5
SCALE: 1/4" = 1'-0"

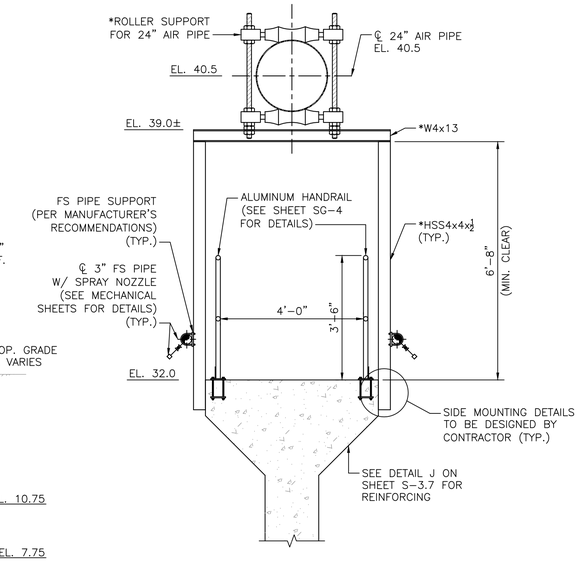

DETAIL D / S-3.6
SCALE: 1/2" = 1'-0"

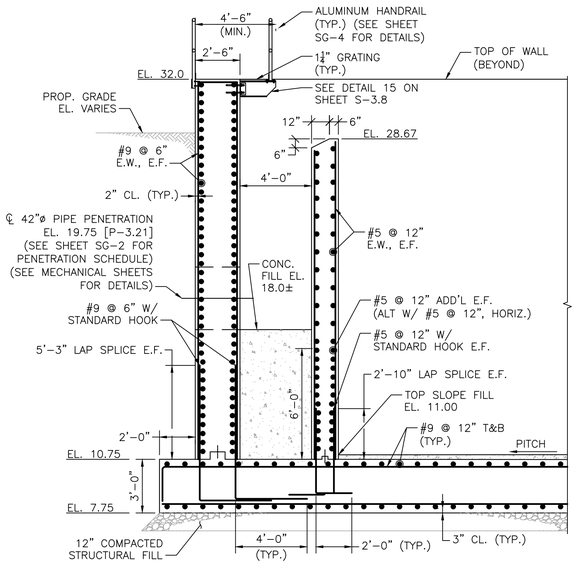

SECTION 8 / S-3.5
SCALE: 1/4" = 1'-0"

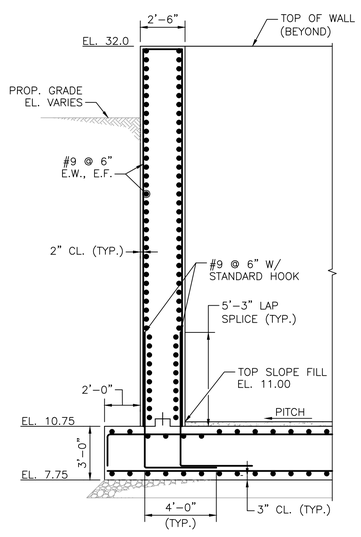

SECTION 9 / S-3.5
SCALE: 1/4" = 1'-0"

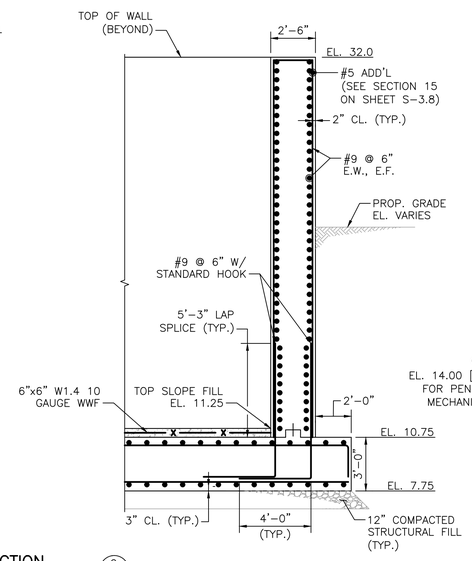

SECTION 10 / S-3.5
SCALE: 1/4" = 1'-0"

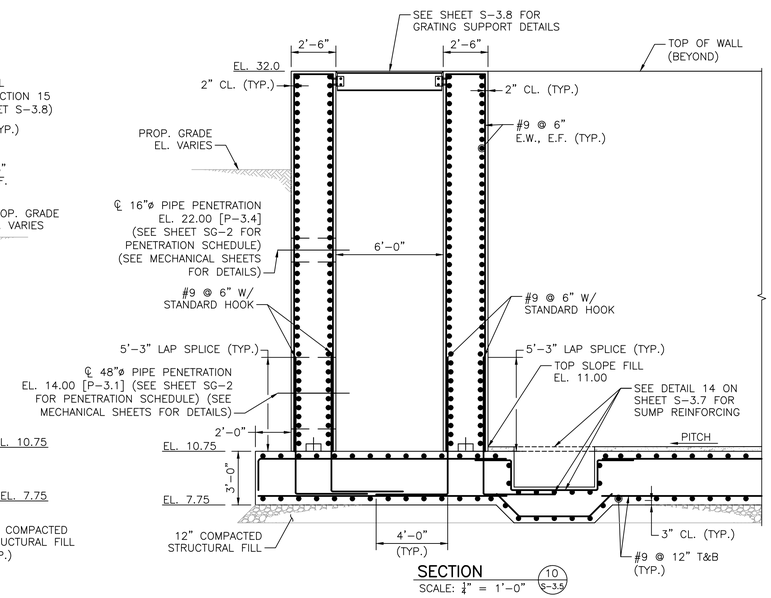

SECTION 10 / S-3.5
SCALE: 1/4" = 1'-0"

PREPARED BY

BETA
www.BETA-Inc.com

REGISTERED PROFESSIONAL

COMMONWEALTH OF MASSACHUSETTS
TODD M. WARZECKI
CIVIL ENGINEER
No. 47367
REGISTERED PROFESSIONAL ENGINEER

SUBCONSULTANT

PROJECT

Taunton Wastewater Treatment Facility Improvements Phase 2

TAUNTON, MA

TITLE

Biological Treatment Tank Sections and Details (1 of 2)

NO.	REVISIONS	DATE

DRAWN BY:	BN
DESIGNED BY:	BN
CHECKED BY:	TMW
ISSUE DATE:	3/31/2022
BETA JOB NO.:	6050

SCALE

AS SHOWN

UNLESS OTHERWISE NOTED OR CHANGED BY REPRODUCTION

SHEET NO.

S-3.6

3/31/2022 11:45 AM N:\6000S\6050 - TAUNTON WWTF\DRAWING FILES\PLANSET\PHASE 2\6050_SR3.6 - P2.DWG (BETA STB BW.STB)

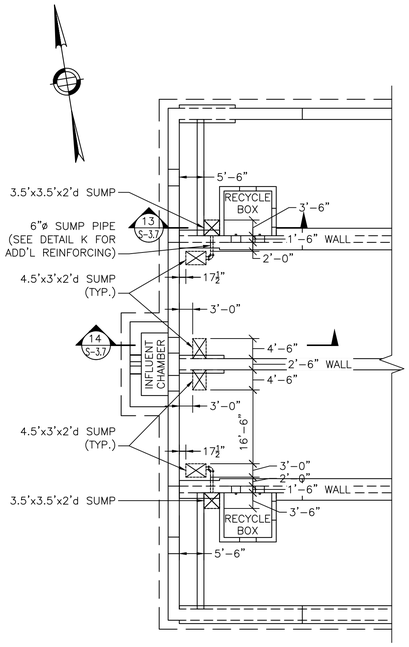

SUMP PLAN
SCALE: 1/16" = 1'-0"

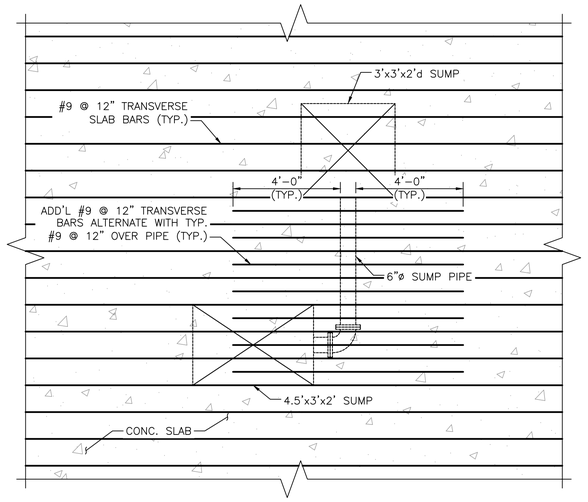

DETAIL K S-3.7
SCALE: 3/8" = 1'-0"

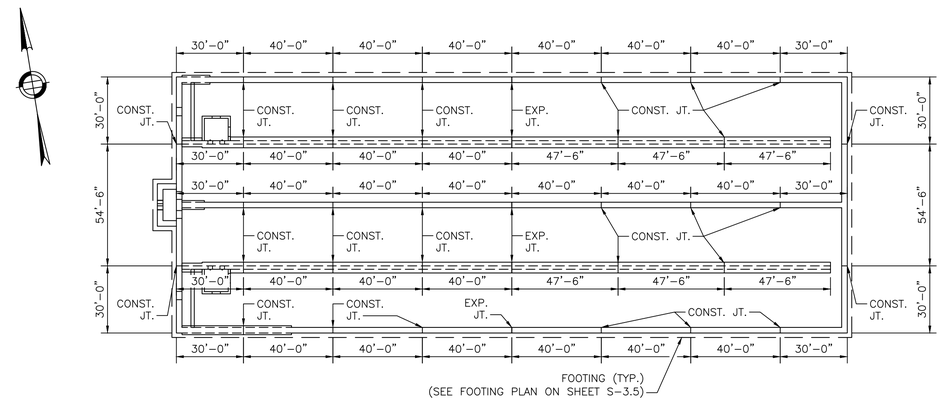

WALL JOINT DETAIL PLAN
SCALE: 3/32" = 1'-0"

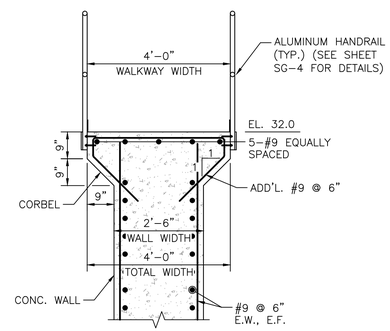

DETAIL H S-3.5
SCALE: 1/2" = 1'-0"

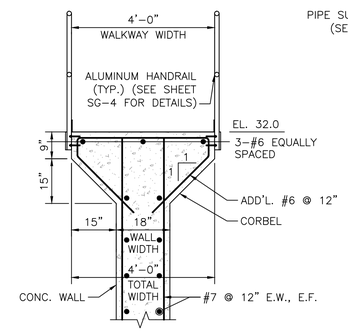

DETAIL I S-3.5
SCALE: 1/2" = 1'-0"

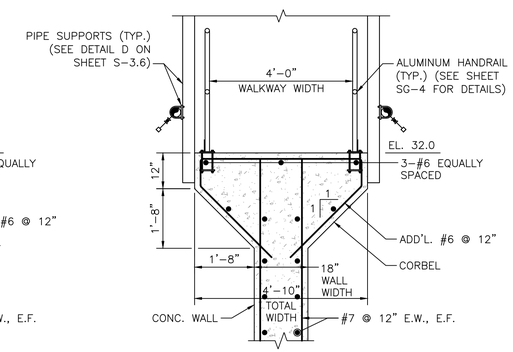

DETAIL J S-3.5
SCALE: 1/2" = 1'-0"

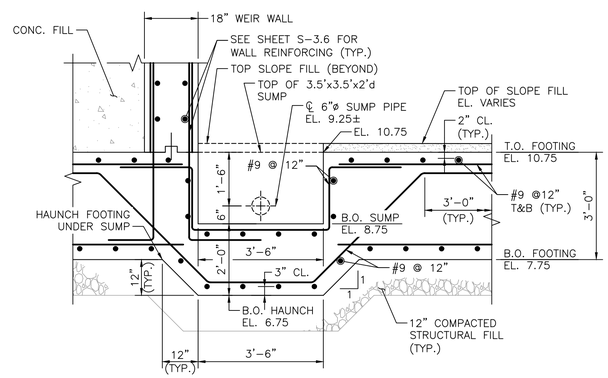

SECTION 13 S-3.7
SCALE: 1/2" = 1'-0"

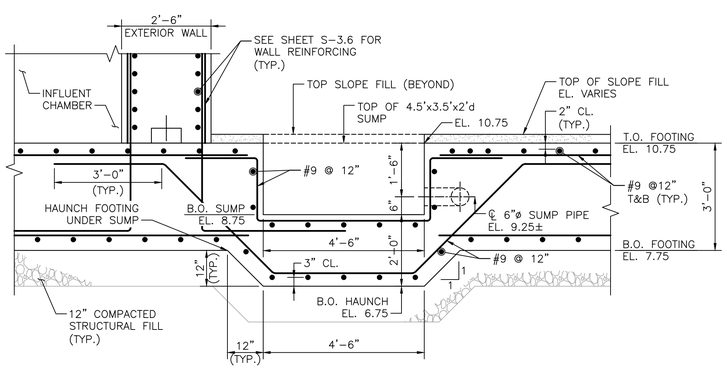

SECTION 14 S-3.7
SCALE: 1/2" = 1'-0"

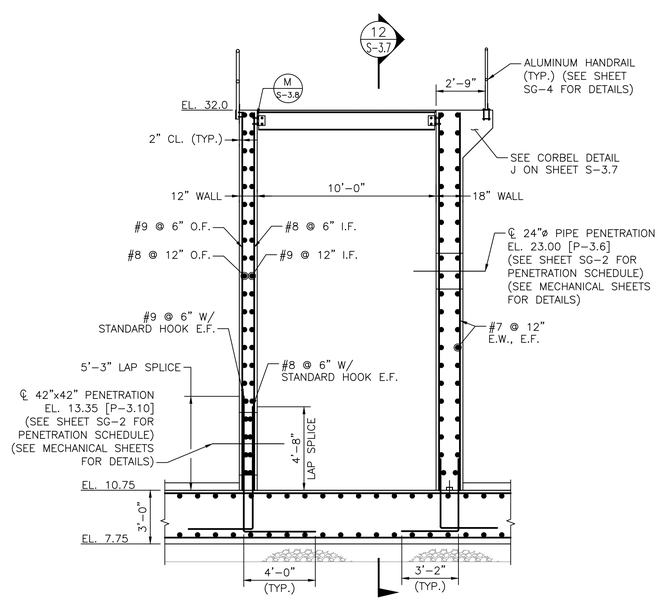

SECTION 11 S-3.5
SCALE: 1/4" = 1'-0"

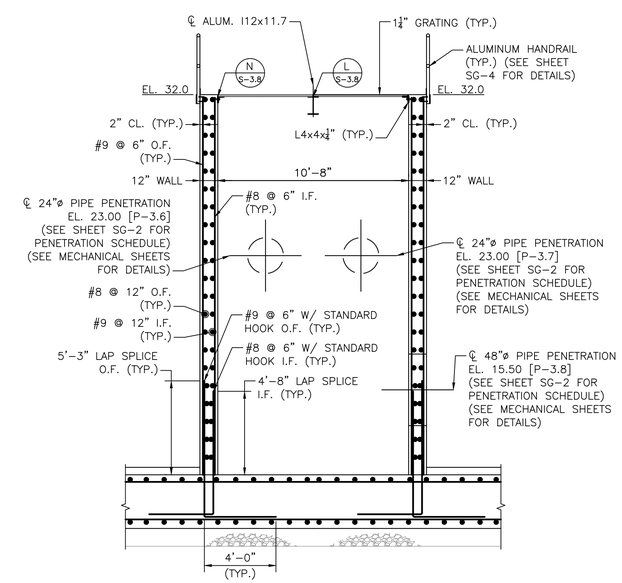

SECTION 12 S-3.7
SCALE: 1/2" = 1'-0"

PREPARED BY

BETA
www.BETA-Inc.com

REGISTERED PROFESSIONAL

COMMONWEALTH OF MASSACHUSETTS
TODD M. WARZECKI
CIVIL ENGINEER
No. 47367
REGISTERED PROFESSIONAL ENGINEER

SUBCONSULTANT

PROJECT

Taunton Wastewater Treatment Facility Improvements

TAUNTON, MA

TITLE

Biological Treatment Tank Sections and Details (2 of 2)

NO.	REVISIONS	DATE

DRAWN BY:	BN
DESIGNED BY:	BN
CHECKED BY:	TMW
ISSUE DATE:	3/31/2022
BETA JOB NO.:	6050

SCALE

AS SHOWN

UNLESS OTHERWISE NOTED OR CHANGED BY REPRODUCTION

SHEET NO. S-3.7

3/31/2022 11:46 AM N:\6000S\6050 - TAUNTON WWTF\DRAWING FILES\PLANSET\PHASE 2\6050_SR3.7 - P2.DWG (BETA STB BW.STB)

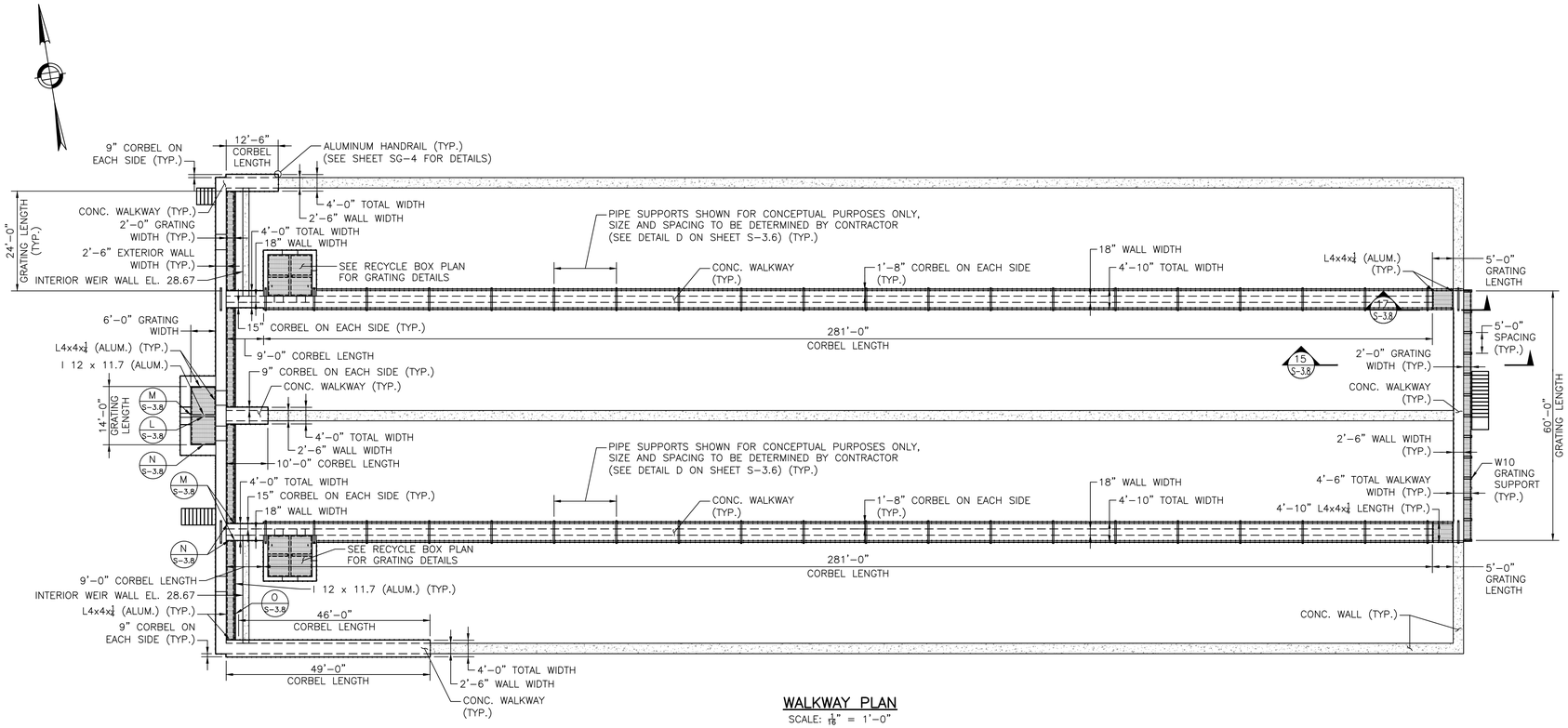

WALKWAY PLAN
SCALE: 1/16" = 1'-0"

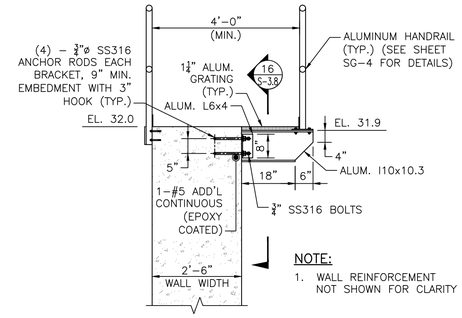

SECTION
SCALE: ½" = 1'-0"

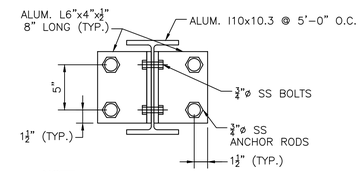

SECTION
SCALE: 1½" = 1'-0"

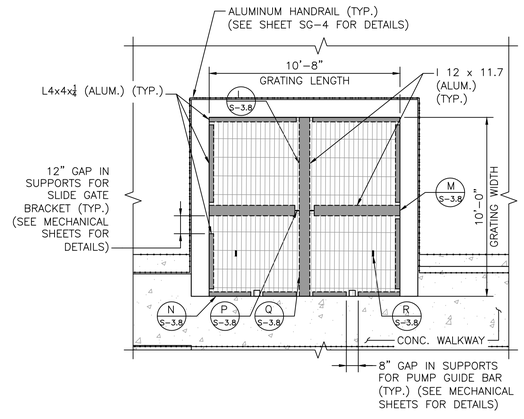

[NORTH BOX SHOWN, SOUTH BOX SIMILIAR]

RECYCLE BOX PLAN
SCALE: ¼" = 1'-0"

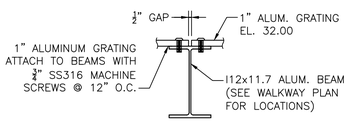

DETAIL
SCALE: 1" = 1'-0"

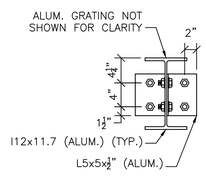

[SECTION]

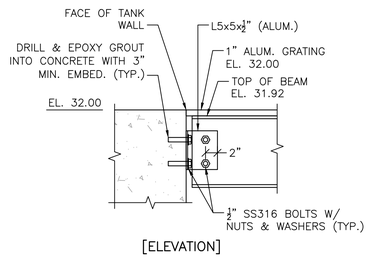

[ELEVATION]

DETAIL
SCALE: 1" = 1'-0"

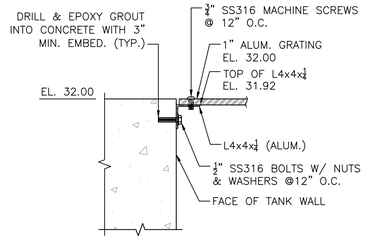

DETAIL
SCALE: 1" = 1'-0"

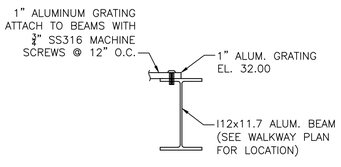

DETAIL
SCALE: 1" = 1'-0"

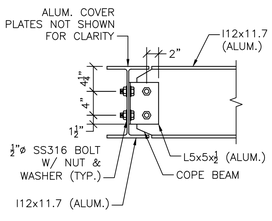

DETAIL
SCALE: 1" = 1'-0"

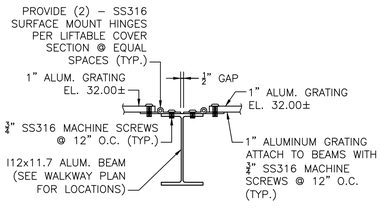

DETAIL
SCALE: 1" = 1'-0"

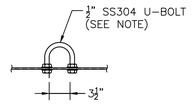

NOTE:
1. U-BOLT "HANDLES" SHALL BE LOCATED AT THE CENTERLINE OF PLATE, 12" FROM THE END OF THE PLATE

DETAIL
SCALE: 1" = 1'-0"

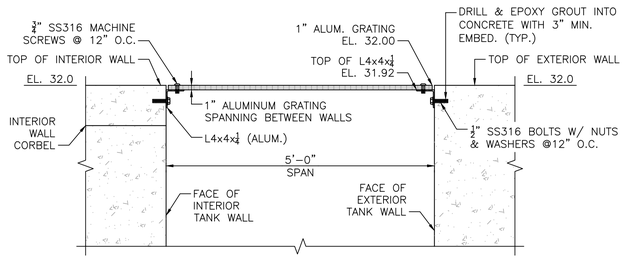

SECTION
SCALE: ¾" = 1'-0"

PREPARED BY

BETA
www.BETA-Inc.com

REGISTERED PROFESSIONAL

COMMONWEALTH OF MASSACHUSETTS
TODD M. WARZECKI
CIVIL ENGINEER
No. 47367
REGISTERED PROFESSIONAL ENGINEER

SUBCONSULTANT

PROJECT

Taunton Wastewater Treatment Facility Improvements Phase 2

TAUNTON, MA

TITLE

Biological Treatment Tank Walkways

NO.	REVISIONS	DATE

DRAWN BY:	BN
DESIGNED BY:	BN
CHECKED BY:	TMW
ISSUE DATE:	3/31/2022
BETA JOB NO.:	6050

SCALE

AS SHOWN

UNLESS OTHERWISE NOTED OR CHANGED BY REPRODUCTION

SHEET NO.

S-3.8

3/31/2022 11:47 AM N:\6000S\6050 - TAUNTON WWTF\DRAWING FILES\PLANSET\PHASE 2\6050_SR3.8 - P2.DWG (BETA STB BW.STB)

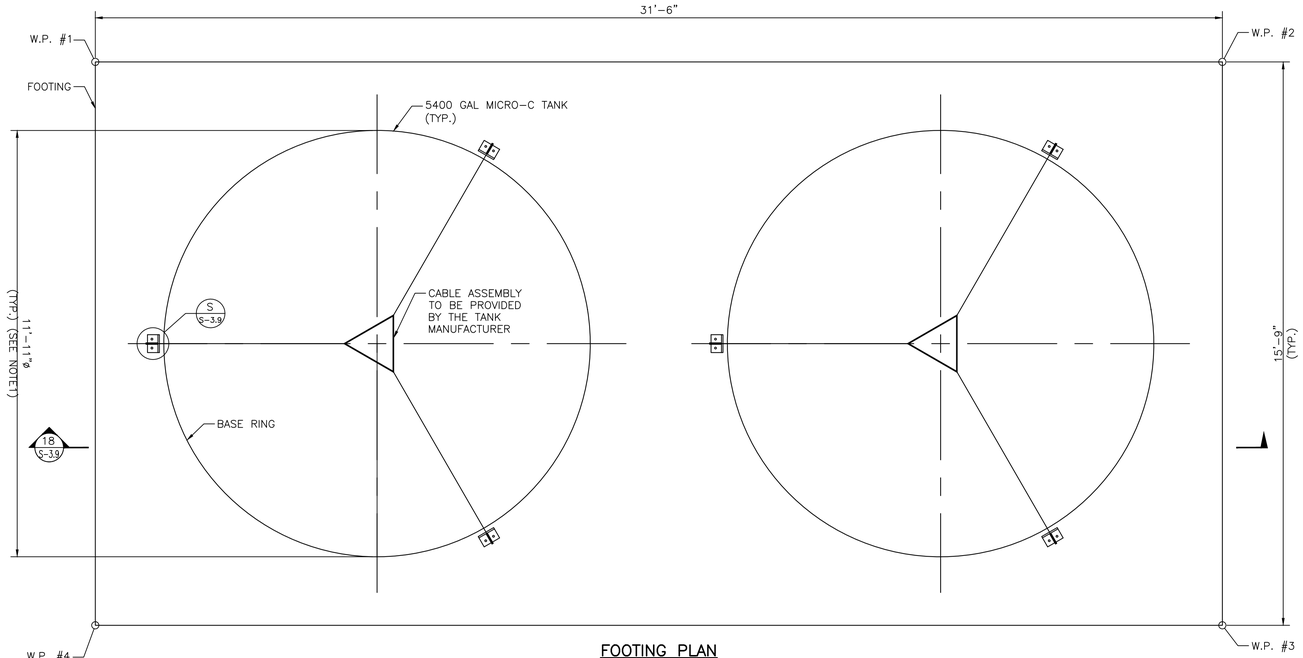

FOOTING PLAN
SCALE: 1/2" = 1'-0"

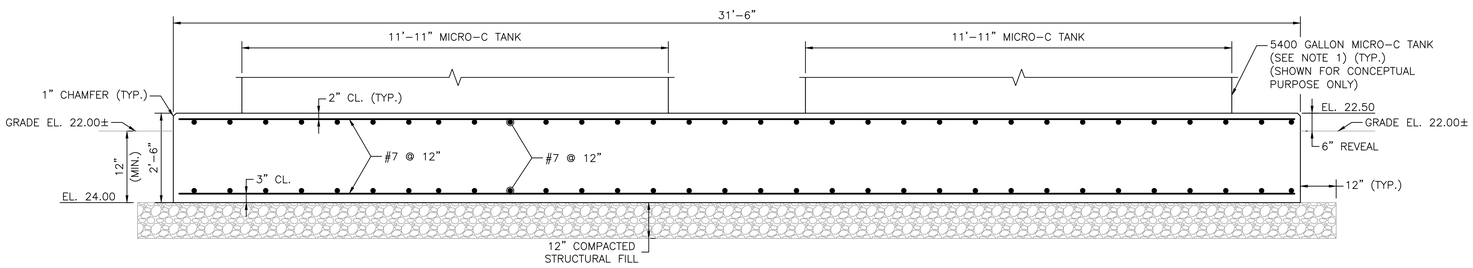

SECTION 18 S-3.9
SCALE: 1/2" = 1'-0"

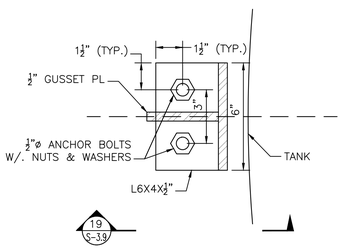

DETAIL S S-3.9
SCALE: 3" = 1'-0"

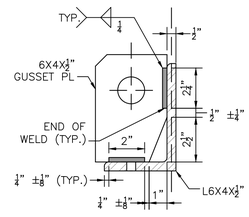

CLIP DETAIL
SCALE: 3" = 1'-0"

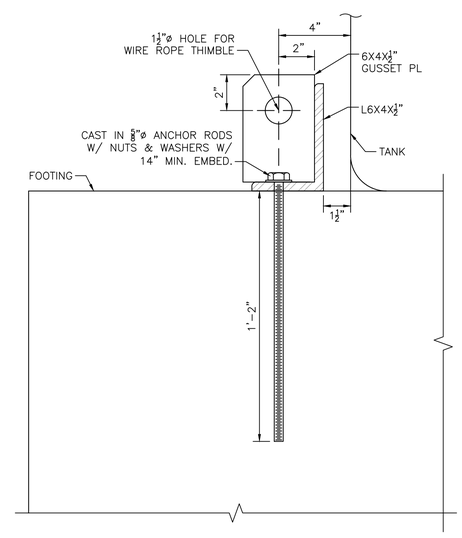

SECTION 19 S-3.9
SCALE: 3" = 1'-0"

NOTES:

1. FOOTING SHOWN IS BASED ON THE DESIGN VALUES SHOWN IN TABLE 1 AND MAY NOT REPRESENT ACTUAL MICRO-C TANK.
2. MICRO-C TANK TO BE PROVIDED BY THE CONTRACTOR. IF TANK LOADING IS GREATER THAN THE VALUES PROVIDED IN TABLE 1, THE CONTRACTOR WILL BE RESPONSIBLE FOR PROVIDING AN ALTERNATE FOOTING DESIGN PREPARED BY A MASSACHUSETTS REGISTERED STRUCTURAL ENGINEER.
3. ANCHOR LOCATIONS TO BE COORDINATED WITH TANK MANUFACTURERS.

TABLE 1 – UNFACTORED BASE REACTIONS	
DEAD LOAD:	2.75 KIPS
LIVE LOAD:	70.0 KIPS

MICRO-C TANK FOOTINGS		
	NORTHING	EASTING
W.P. #1	2779411.08	766057.16
W.P. #2	2779406.05	766088.26
W.P. #3	2779390.50	766085.75
W.P. #4	2779395.53	766054.65

PREPARED BY

BETA
www.BETA-Inc.com

REGISTERED PROFESSIONAL

COMMONWEALTH OF MASSACHUSETTS
TODD M. WARZECKI
CIVIL ENGINEER
No. 47367
REGISTERED PROFESSIONAL ENGINEER

SUBCONSULTANT

PROJECT

Taunton Wastewater Treatment Facility Improvements Phase 2

TAUNTON, MA

TITLE

Micro-C Tank

NO.	REVISIONS	DATE

DRAWN BY:	BN
DESIGNED BY:	BN
CHECKED BY:	TMW
ISSUE DATE:	3/31/2022
BETA JOB NO.:	6050

SCALE

AS SHOWN

UNLESS OTHERWISE NOTED OR CHANGED BY REPRODUCTION

SHEET NO.

S-3.9

3/31/2022 11:47 AM N:\6000S\6050 - TAUNTON WWTF\DRAWING FILES\PLANSET\PHASE 2\6050_SR3.9 - P2.DWG (BETA STB BW.STB)

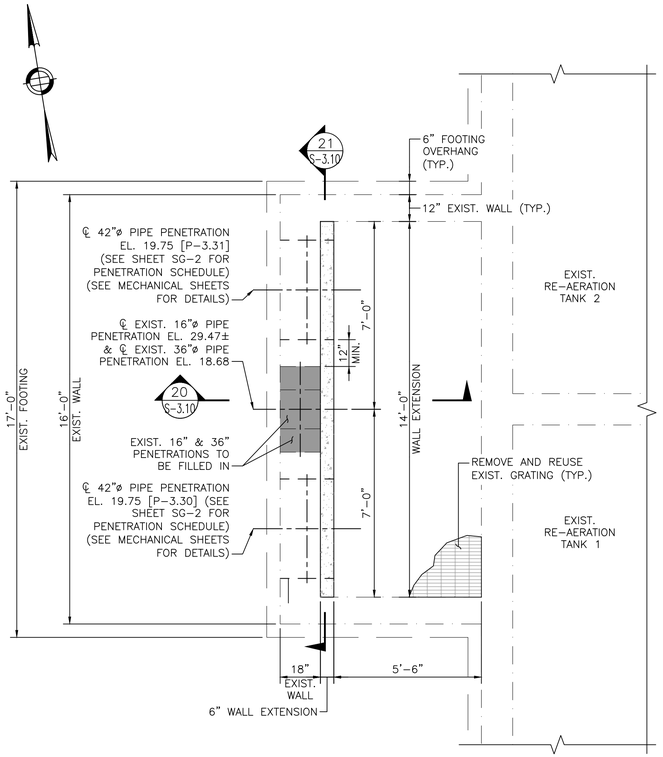

PLAN

SCALE: 3/8" = 1'-0"

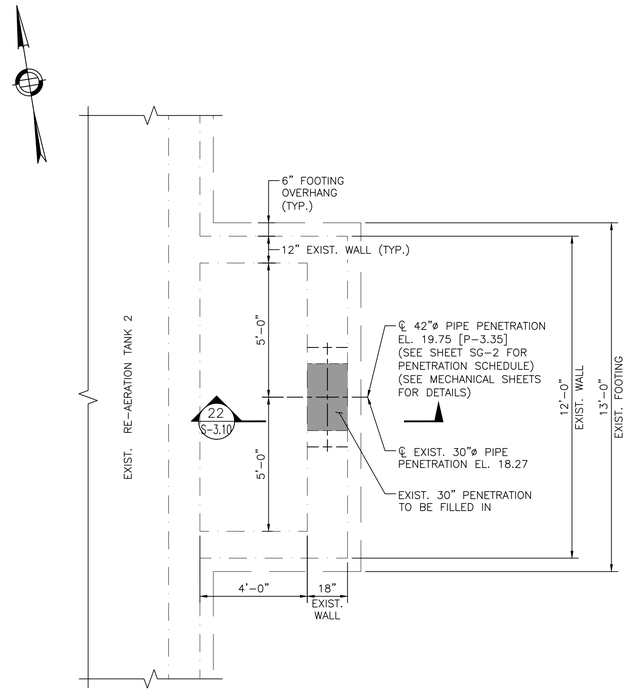

[NORTHEAST CHAMBER SHOWN, SOUTHEAST CHAMBER SIMILAR]

PLAN

SCALE: 3/8" = 1'-0"

NOTES:

1. SEE MECHANICAL SHEETS FOR PIPE PENETRATION INFORMATION.
2. CONTRACTOR WILL NEED TO FIELD-VERIFY ELEVATION OF EXIST. 16"ø PIPE.

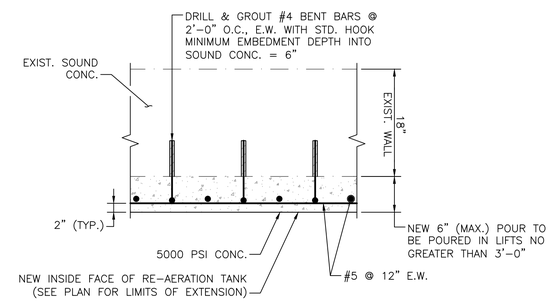

DETAIL

SCALE: 1" = 1'-0" (T / S-3.10)

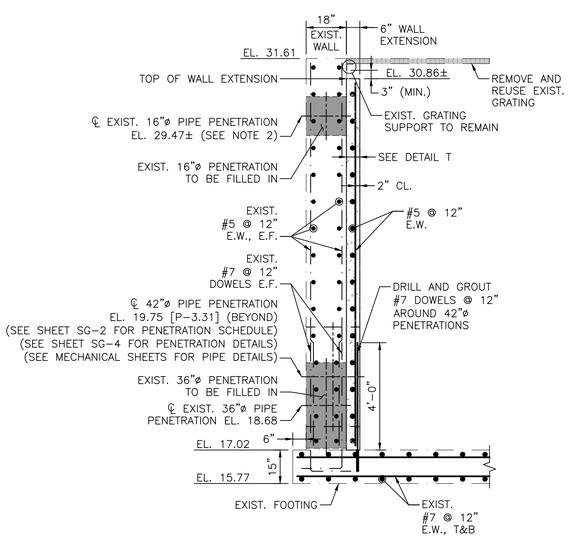

SECTION

SCALE: 3/8" = 1'-0" (20 / S-3.10)

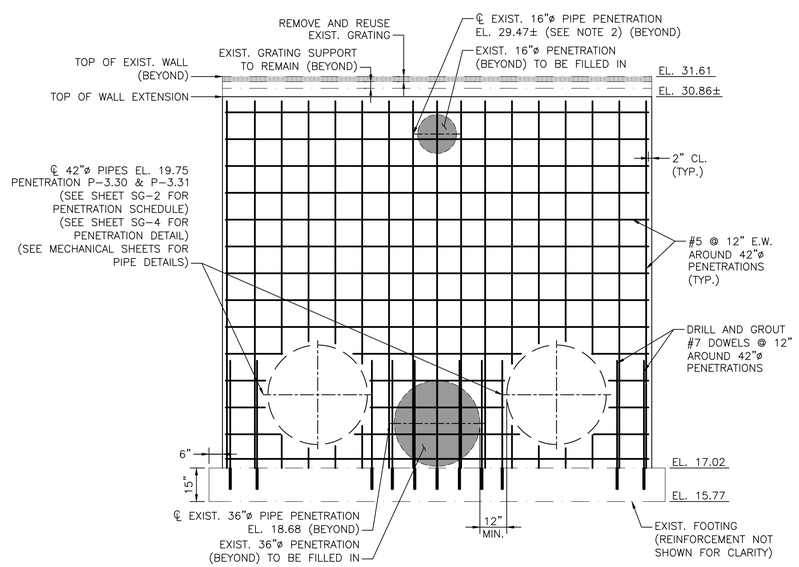

SECTION

SCALE: 3/8" = 1'-0" (21 / S-3.10)

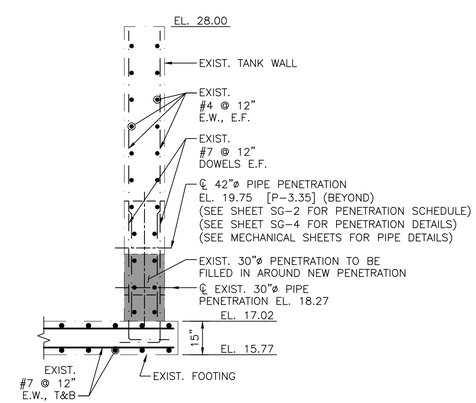

[NORTHEAST CHAMBER SHOWN, SOUTHEAST CHAMBER SIMILAR]

SECTION

SCALE: 3/8" = 1'-0" (22 / S-3.10)

PREPARED BY

BETA
www.BETA-Inc.com

REGISTERED PROFESSIONAL

COMMONWEALTH OF MASSACHUSETTS
TODD M. WARZECKI
CIVIL ENGINEER
No. 47367
REGISTERED PROFESSIONAL ENGINEER

SUBCONSULTANT

PROJECT

Taunton Wastewater Treatment Facility Improvements Phase 2

TAUNTON, MA

TITLE

Re-Aeration Tank

NO.	REVISIONS	DATE

DRAWN BY:	BN
DESIGNED BY:	BN
CHECKED BY:	TMW
ISSUE DATE:	3/31/2022
BETA JOB NO.:	6050

SCALE

AS SHOWN

UNLESS OTHERWISE NOTED OR CHANGED BY REPRODUCTION

SHEET NO.

S-3.10

3/31/2022 11:48 AM N:\6000S\6050 - TAUNTON WWTF\DRAWING FILES\PLANSET\PHASE 2\6050_SR3.10- P2.DWG (BETA STB BW STB)

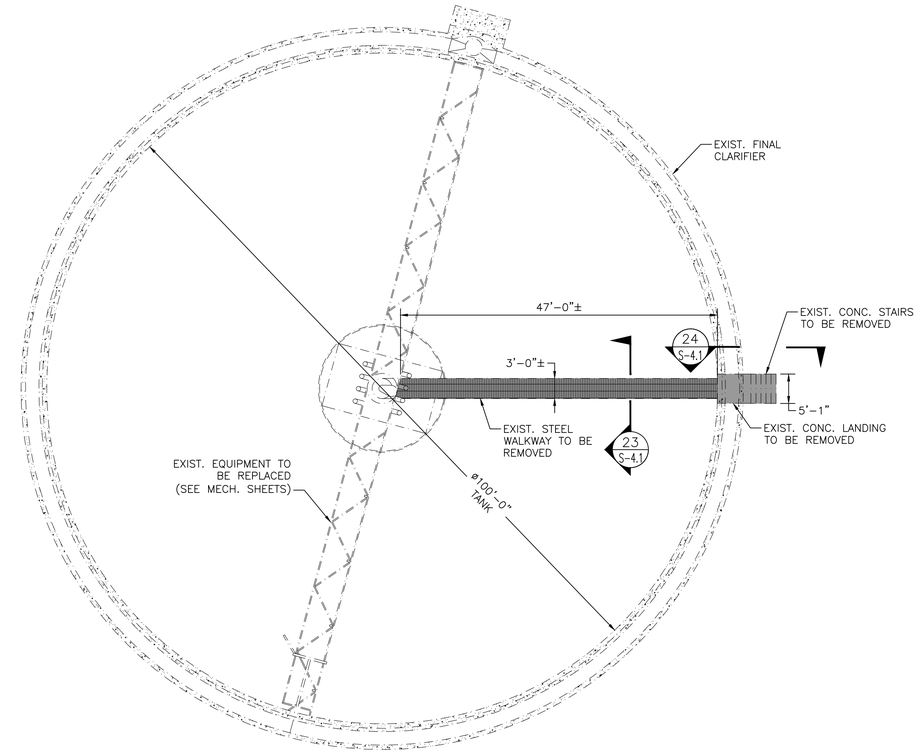

TYPICAL FINAL CLARIFIER DEMO PLAN
SCALE: $\frac{3}{32}$"=1'-0"

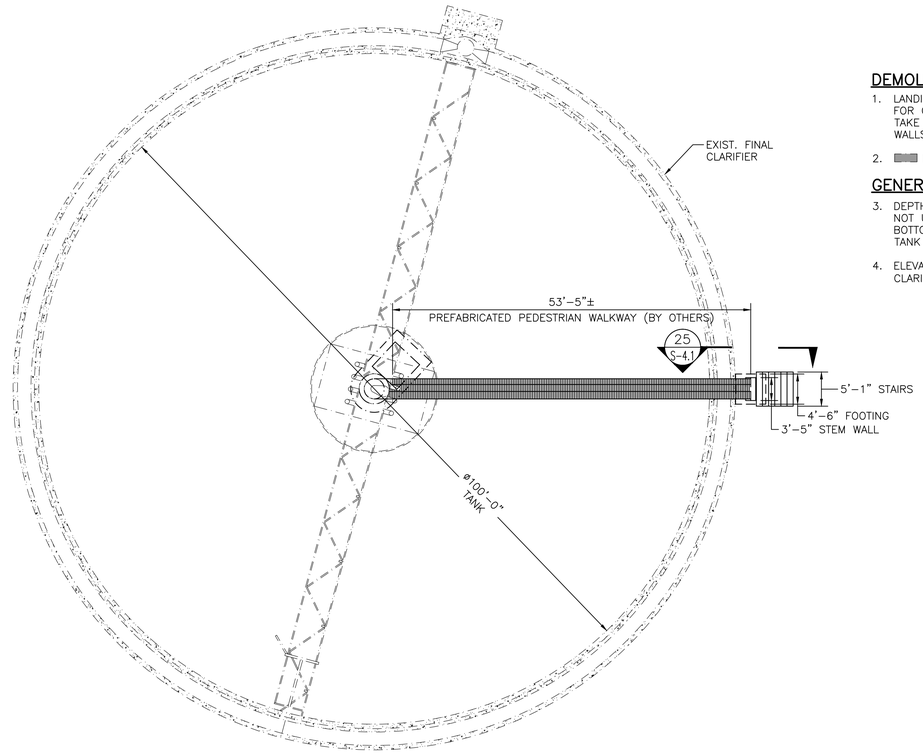

TYPICAL FINAL CLARIFIER PLAN
SCALE: $\frac{3}{32}$"=1'-0"

DEMOLITION NOTES:

1. LANDING REINFORCING IS UNKNOWN AND SHOWN FOR CONCEPTUAL PURPOSES ONLY. CONTRACTOR TO TAKE SPECIAL CARE TO NOT DAMAGE EXISTING TANK WALLS DURING DEMOLITION PROCESS.
2. DENOTES AREA TO BE DEMOLISHED.

GENERAL NOTES:

3. DEPTH OF FOOTING SHOWN IS APPROXIMATE. DO NOT UNDERMINE EXIST. TANK SLAB. SEE DETAIL U IF BOTTOM OF FOOTING DEPTH IS BELOW EXISTING TANK SLAB.
4. ELEVATIONS SHOWN ARE FOR CLARIFIERS 3&4. CLARIFIERS 1&2 ARE APPROX. 5.5' HIGHER.

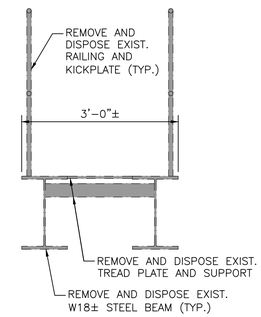

SECTION (23 / S-4.1)
SCALE: $\frac{3}{4}$" = 1'-0"

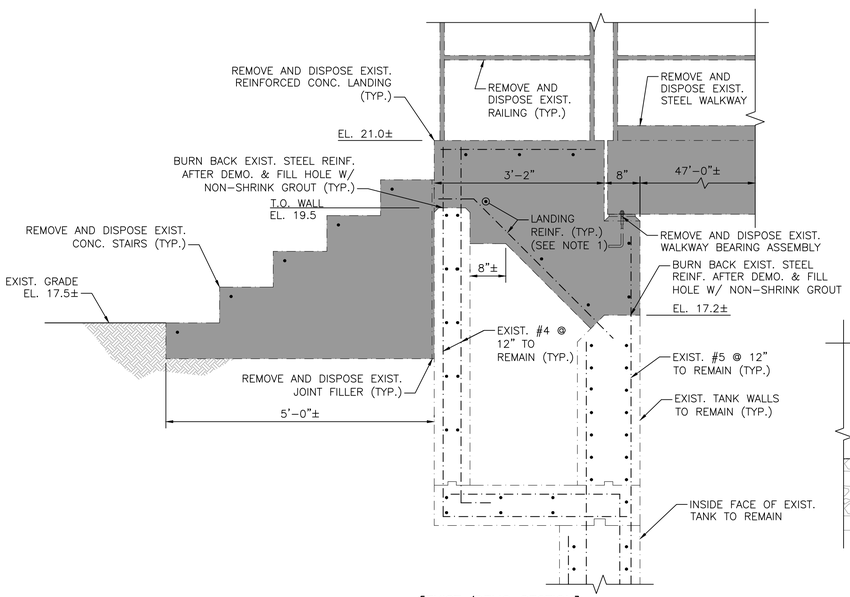

[EXIST./DEMO SECTION]
SECTION (24 / S-4.1)
SCALE: $\frac{3}{4}$" = 1'-0"

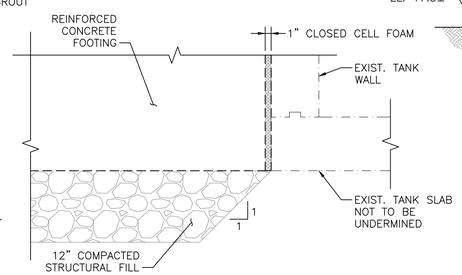

NOTE:
REINFORCING NOT SHOWN FOR CLARIFICATION.

DETAIL (U / S-4.1)
SCALE: 1" = 1'-0"

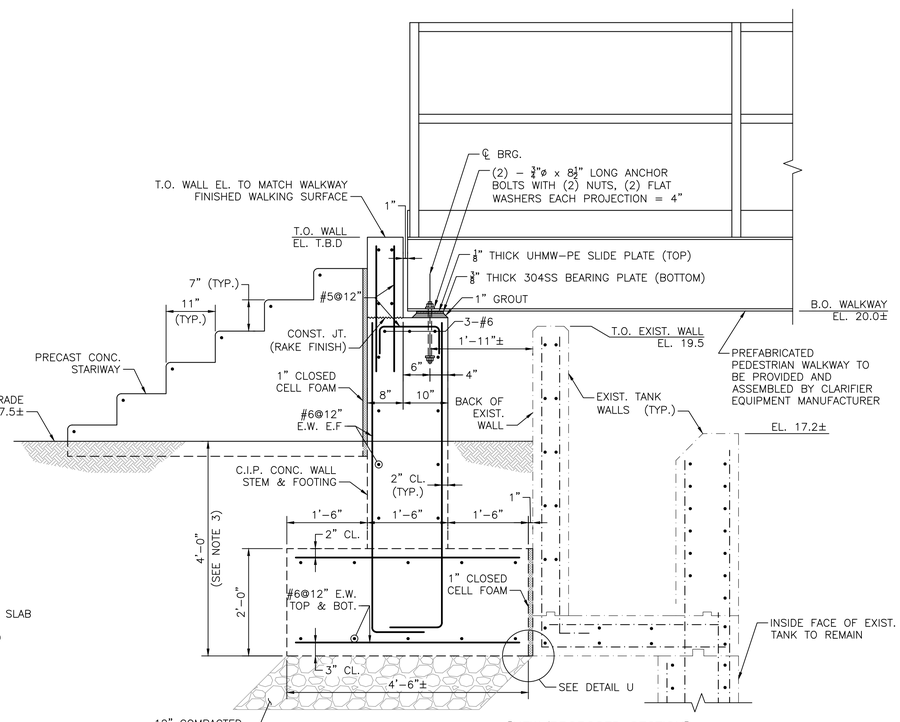

[NEW/PROPOSED SECTION]
SECTION (25 / S-4.1)
SCALE: $\frac{3}{4}$" = 1'-0"

PREPARED BY

BETA
www.BETA-Inc.com

REGISTERED PROFESSIONAL

COMMONWEALTH OF MASSACHUSETTS
TODD M. WARZECKI
CIVIL ENGINEER
No. 47367
REGISTERED PROFESSIONAL ENGINEER

SUBCONSULTANT

PROJECT

Taunton Wastewater Treatment Facility Improvements Phase 2

TAUNTON, MA

TITLE

Final Clarifiers Sections & Details

NO.	REVISIONS	DATE

DRAWN BY:	BN
DESIGNED BY:	BN
CHECKED BY:	TMW
ISSUE DATE:	3/31/2022
BETA JOB NO.:	6050

SCALE

AS SHOWN

UNLESS OTHERWISE NOTED OR CHANGED BY REPRODUCTION

SHEET NO.

S-4.1

3/31/2022 11:48 AM \\BETA-INC.COM\RUTRANS\6000S\6050 - TAUNTON WWTF\DRAWING FILES\PLANSET\PHASE 2\6050_SR4.1 - P2.DWG (BETA STB.BW.STB)

NOTES:

1. ALL STEEL SHAPES SHALL BE ASTM A992 GRADE 50 AND GALVANIZED IN ACCORDANCE WITH ASTM A123.
2. HOIST CAPACITY SHALL NOT EXCEED 5 TONS (MAX.).
3. IT IS THE CONTRACTOR'S RESPONSIBILITY TO PROVIDE A MEANS OF TEMPORARY SUPPORT FOR THE BRICK FACADE DURING ANCHOR BOLT INSTALLATION. ANY DAMAGE TO THE SURROUNDING BRICK FACADE SHALL BE REPAIRED BY THE CONTRACTOR AT NO ADDITIONAL COST.

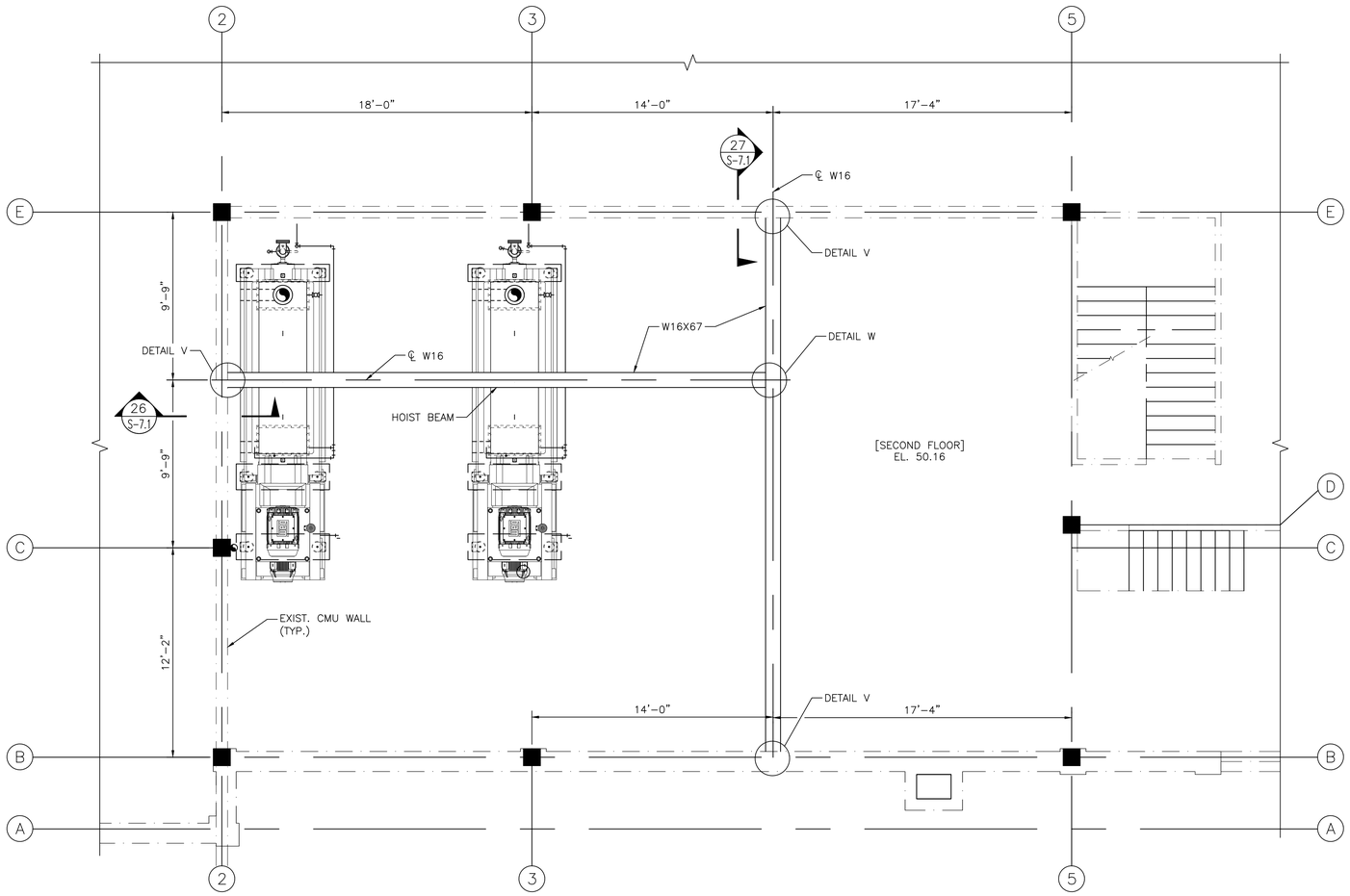

NOTE: UPPER ROOF FRAMING NOT SHOWN FOR CLARITY.

FRAMING PLAN

SCALE: $\frac{1}{4}$" = 1'-0"

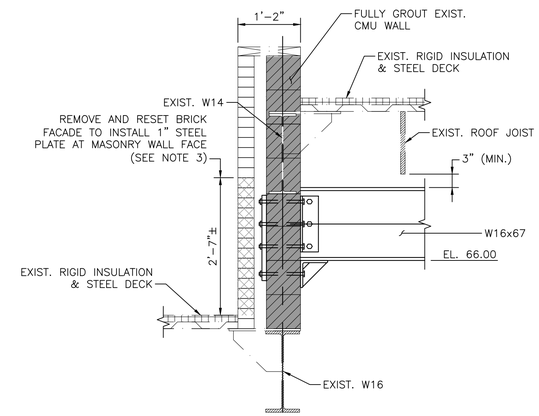

SECTION 26

SCALE: 1" = 1'-0"

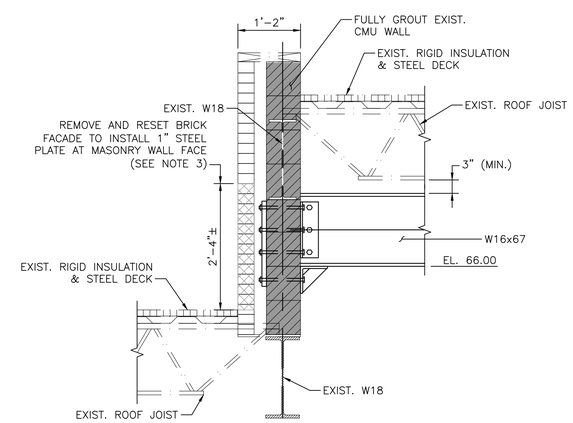

SECTION 27

SCALE: 1" = 1'-0"

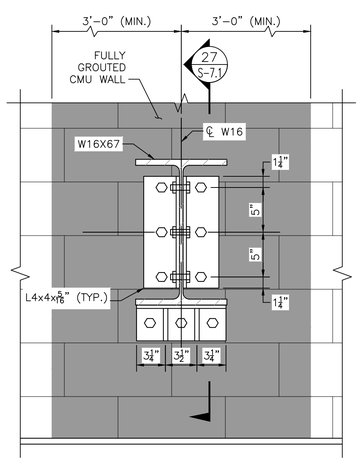

ELEVATION

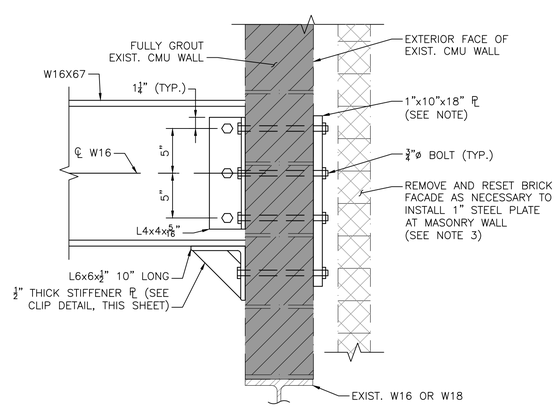

SECTION 27

DETAIL V

SCALE: 1½" = 1'-0"

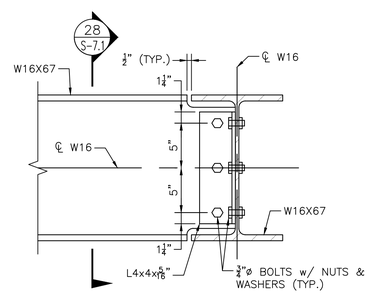

ELEVATION

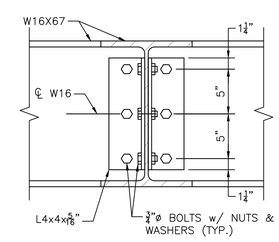

SECTION 28

DETAIL W

SCALE: 1½" = 1'-0"

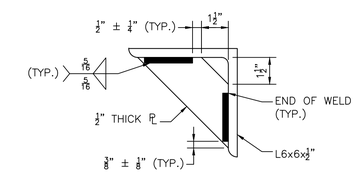

CLIP DETAIL

SCALE: 3" = 1'-0"

PREPARED BY

BETA
www.BETA-Inc.com

REGISTERED PROFESSIONAL

COMMONWEALTH OF MASSACHUSETTS
TODD M. WARZECKI
CIVIL ENGINEER
No. 47367
REGISTERED PROFESSIONAL ENGINEER

SUBCONSULTANT

PROJECT

Taunton Wastewater Treatment Facility Improvements Phase 2

TAUNTON, MA

TITLE

Solids Handling Building Hoist Framing & Details

NO.	REVISIONS	DATE

DRAWN BY:	JMR
DESIGNED BY:	JMR
CHECKED BY:	TMW
ISSUE DATE:	3/31/2022
BETA JOB NO.:	6050

SCALE

AS SHOWN

UNLESS OTHERWISE NOTED OR CHANGED BY REPRODUCTION

SHEET NO. S-7.1

3/31/2022 11:48 AM N:\6000\S\6050 - TAUNTON WWTP\DRAWING FILES\PLANSET\PHASE 2\6050_SR7.1-P2.DWG (BETA STB BW.STB)

PIPE SCHEDULE

FLOW STREAM	ABBREVIATION	LOCATION	SIZE	MATERIAL	SCHEDULE/CLASS	LINING	JOINT TYPE	INSULATION	SPEC SECTION
BIOFILTER AIR	BFA	ABOVE GRADE	ALL	FRP	N/A	NONE	FLANGED	NONE	11961
		ALL	ALL	HDPE	DR17	NONE	BUTT FUSED	NONE	02620
CITY WATER	CW	BELOW GRADE	≤ 3"	COPPER	TYPE K	NONE	SOLDERED	NONE	11961
			> 3"	DUCTILE IRON	CLASS 52	CEMENT	MECHANICAL JOINT	NONE	02618
DRAIN	D	BELOW GRADE	ALL	PVC	SDR 35	NONE	PUSH ON	NONE	11961
TANK DRAIN	TD	ALL	ALL	DUCTILE IRON	CLASS 52	CEMENT	MECHANICAL JOINT	NONE	11961
FOAM SPRAY	FS	ABOVE GRADE	≤ 3"	FRP COATED PVC	150 PSI	NONE	PUSH ON	NONE	11961
		ALL	> 3"	DUCTILE IRON	CLASS 52	CEMENT	MECHANICAL JOINT	NONE	02618
INTERNAL RECYCLE	IR	ALL	ALL	DUCTILE IRON	CLASS 52	CEMENT	MECHANICAL JOINT	NONE	11961
LIME SLURRY	LS	ALL	ALL	PVC	SCH 80	NONE	SOLVENT WELD	NONE	11961
				HDPE	SDR 11	NONE	BUTT FUSED	NONE	02620
PLANT WATER	PW	INDOOR	≤ 3"	COPPER	TYPE K	NONE	SOLDERED	NONE	11961
		ALL	> 3"	DUCTILE IRON	CLASS 52	CEMENT	MECHANICAL JOINT	NONE	02618
PRIMARY EFFLUENT	PE	BELOW GRADE	ALL	DUCTILE IRON	CLASS 52	CEMENT	MECHANICAL JOINT	NONE	02618
PRIMARY INFLUENT	PI	BELOW GRADE	ALL	DUCTILE IRON	CLASS 52	CEMENT	MECHANICAL JOINT	NONE	02618
PRIMARY SLUDGE	PS	ABOVE GRADE	ALL	DUCTILE IRON	CLASS 52	GLASS	FLANGED	NONE	11961
		BELOW GRADE	ALL	DUCTILE IRON	CLASS 52	GLASS	MECHANICAL JOINT	NONE	02618
PROCESS AIR	PA	ALL	ALL	STAINLESS STEEL	SCH 10S	NONE	WELDED	NONE	11961
RETURN ACTIVATED SLUDGE	RAS	ABOVE GRADE	ALL	DUCTILE IRON	CLASS 52	GLASS	FLANGED	NONE	11961
		BELOW GRADE	ALL	DUCTILE IRON	CLASS 52	GLASS	MECHANICAL JOINT	NONE	02618
SANITARY FORCE MAIN	SFM	BELOW GRADE	ALL	PVC	SDR 21	NONE	PUSH ON	NONE	02627
SANITARY SEWER	SS	BELOW GRADE	ALL	PVC	SDR 35	NONE	PUSH ON	NONE	11961
SCUM	SC	ALL	ALL	DUCTILE IRON	CLASS 52	CEMENT	MECHANICAL JOINT	NONE	11961
SECONDARY EFFLUENT	SE	ALL	ALL	DUCTILE IRON	CLASS 52	CEMENT	MECHANICAL JOINT	NONE	02618
SODIUM BISULFITE	SB	ALL	ALL	PVC	SCH 80	NONE	SOLVENT WELD	INSUL. & HEAT TRACE	11961
SODIUM HYPOCHLORITE	SH	ALL	ALL	PVC	SCH 80	NONE	SOLVENT WELD	NONE	11961
				HDPE	SDR 11	NONE	BUTT FUSED	NONE	02620
THICKENED SLUDGE	TS	ABOVE GRADE	ALL	DUCTILE IRON	CLASS 52	GLASS	FLANGED	NONE	11961
		BELOW GRADE	ALL	DUCTILE IRON	CLASS 52	GLASS	MECHANICAL JOINT	NONE	02618
WASTE ACTIVATED SLUDGE	WAS	ABOVE GRADE	ALL	DUCTILE IRON	CLASS 52	GLASS	FLANGED	NONE	11961
		BELOW GRADE	ALL	DUCTILE IRON	CLASS 52	GLASS	MECHANICAL JOINT	NONE	02618

SLIDE GATE SCHEDULE

GATE TAG	LOCATION	MOUNTING TYPE	TYPE	OPENING WIDTH (IN)	OPENING HEIGHT (IN)	OPENING DIAMETER (IN)	GATE MATERIAL	OPERATOR	OPENING INVERT EL. (FT)	OPERATING FLOOR EL. (FT)	MAXIMUM SEATING HEAD (FT)	MAXIMUM UNSEATING HEAD (FT)
SG-1	BIOLOGICAL REACTOR INFLUENT CHAMBER	WALL	NON SELF CONTAINED RISING STEM	–	–	42	316 STAINLESS STEEL	MANUAL HAND CRANK	12.25	32.00	18.11	18.11
SG-2	BIOLOGICAL REACTOR INFLUENT CHAMBER	WALL	NON SELF CONTAINED RISING STEM	–	–	42	316 STAINLESS STEEL	MANUAL HAND CRANK	12.25	32.00	18.11	18.11
SG-3	INTERNAL RECYCLE PUMP CHAMBER (TRAIN 1)	WALL	NON SELF CONTAINED RISING STEM	42	42	–	316 STAINLESS STEEL	MANUAL HAND CRANK	11.60	32.00	18.76	18.76
SG-4	INTERNAL RECYCLE PUMP CHAMBER (TRAIN 1)	WALL	NON SELF CONTAINED RISING STEM	–	–	48	316 STAINLESS STEEL	MANUAL HAND CRANK	13.50	32.00	16.86	16.86
SG-5	INTERNAL RECYCLE PUMP CHAMBER (TRAIN 2)	WALL	NON SELF CONTAINED RISING STEM	42	42	–	316 STAINLESS STEEL	MANUAL HAND CRANK	11.60	32.00	18.76	18.76
SG-6	INTERNAL RECYCLE PUMP CHAMBER (TRAIN 2)	WALL	NON SELF CONTAINED RISING STEM	–	–	48	316 STAINLESS STEEL	MANUAL HAND CRANK	13.50	32.00	16.86	16.86
SG-7	SECONDARY ANOXIC TANK NO.1 INFLUENT	WALL	SELF CONTAINED RISING STEM	–	–	42	316 STAINLESS STEEL	MANUAL HAND CRANK	18.00	26.50 [A]	10.40	12.36
SG-8	SECONDARY ANOXIC TANK NO.2 INFLUENT	WALL	SELF CONTAINED RISING STEM	–	–	42	316 STAINLESS STEEL	MANUAL HAND CRANK	18.00	26.50 [A]	10.40	12.36
SG-9	SECONDARY ANOXIC TANK NO.1 EFLUENT	WALL	SELF CONTAINED RISING STEM	–	–	42	316 STAINLESS STEEL	MANUAL HAND CRANK	18.00	26.50 [A]	10.40	9.39
SG-10	SECONDARY ANOXIC TANK NO.2 EFLUENT	WALL	SELF CONTAINED RISING STEM	–	–	42	316 STAINLESS STEEL	MANUAL HAND CRANK	18.00	26.50 [A]	10.40	9.39
SG-11	RE-AERATION TANK NO.1 INFLUENT	WALL	SELF CONTAINED RISING STEM	36	42	–	316 STAINLESS STEEL	MANUAL HAND CRANK	20.27	31.61	8.13	7.12
SG-12	RE-AERATION TANK NO.2 INFLUENT	WALL	SELF CONTAINED RISING STEM	36	42	–	316 STAINLESS STEEL	MANUAL HAND CRANK	20.27	31.61	8.13	7.12
SG-13	RE-AERATION TANK NO.1 EFLUENT	WALL	SELF CONTAINED RISING STEM	–	–	42	316 STAINLESS STEEL	MANUAL HAND CRANK	18.00	28.00	9.39	12.36
SG-14	RE-AERATION TANK NO.2 EFLUENT	WALL	SELF CONTAINED RISING STEM	–	–	42	316 STAINLESS STEEL	MANUAL HAND CRANK	18.00	28.00	9.39	12.36
SG-15	FINAL CLARIFIER FLOW DISTRIBUTION STRUC.	WEIR WALL	DOWNWARD OPENING SELF CONTAINED RISING STEM	48	36.75	–	316 STAINLESS STEEL	MANUAL HAND CRANK	23.44	26.50	0.32	1.64
SG-16	FINAL CLARIFIER FLOW DISTRIBUTION STRUC.	WEIR WALL	DOWNWARD OPENING SELF CONTAINED RISING STEM	48	36.75	–	316 STAINLESS STEEL	MANUAL HAND CRANK	23.44	26.50	0.32	1.64
SG-17	FINAL CLARIFIER FLOW DISTRIBUTION STRUC.	WEIR WALL	DOWNWARD OPENING SELF CONTAINED RISING STEM	48	36.75	–	316 STAINLESS STEEL	MANUAL HAND CRANK	23.44	26.50	0.00	1.64
SG-18	FINAL CLARIFIER FLOW DISTRIBUTION STRUC.	WEIR WALL	DOWNWARD OPENING SELF CONTAINED RISING STEM	48	36.75	–	316 STAINLESS STEEL	MANUAL HAND CRANK	23.44	26.50	0.00	1.64

[A] GATE WILL BE ACCESSIBLE FROM GROUND LEVEL OUTSIDE OF THE TANK

PREPARED BY

BETA
www.BETA-Inc.com

REGISTERED PROFESSIONAL

COMMONWEALTH OF MASSACHUSETTS
JOSEPH FEDERICO, JR.
No. 30663
REGISTERED PROFESSIONAL ENGINEER

SUBCONSULTANT

PROJECT

Taunton Wastewater Treatment Facility Improvements Phase 2

Taunton, MA

TITLE

Mechanical Schedule

NO.	REVISIONS	DATE

DRAWN BY:	BM
DESIGNED BY:	MA
CHECKED BY:	SR
ISSUE DATE:	3/31/2022
BETA JOB NO.:	6050

SCALE

AS SHOWN

UNLESS OTHERWISE NOTED OR CHANGED BY REPRODUCTION

SHEET NO.

M-0.1

3/31/2022 10:58 AM J:\TAUNTON\WWTF DESIGN\AUTOCAD\PLAN SET\PHASE 2\PIPE SCHEDULE.DWG (BETA STB BW.STB)

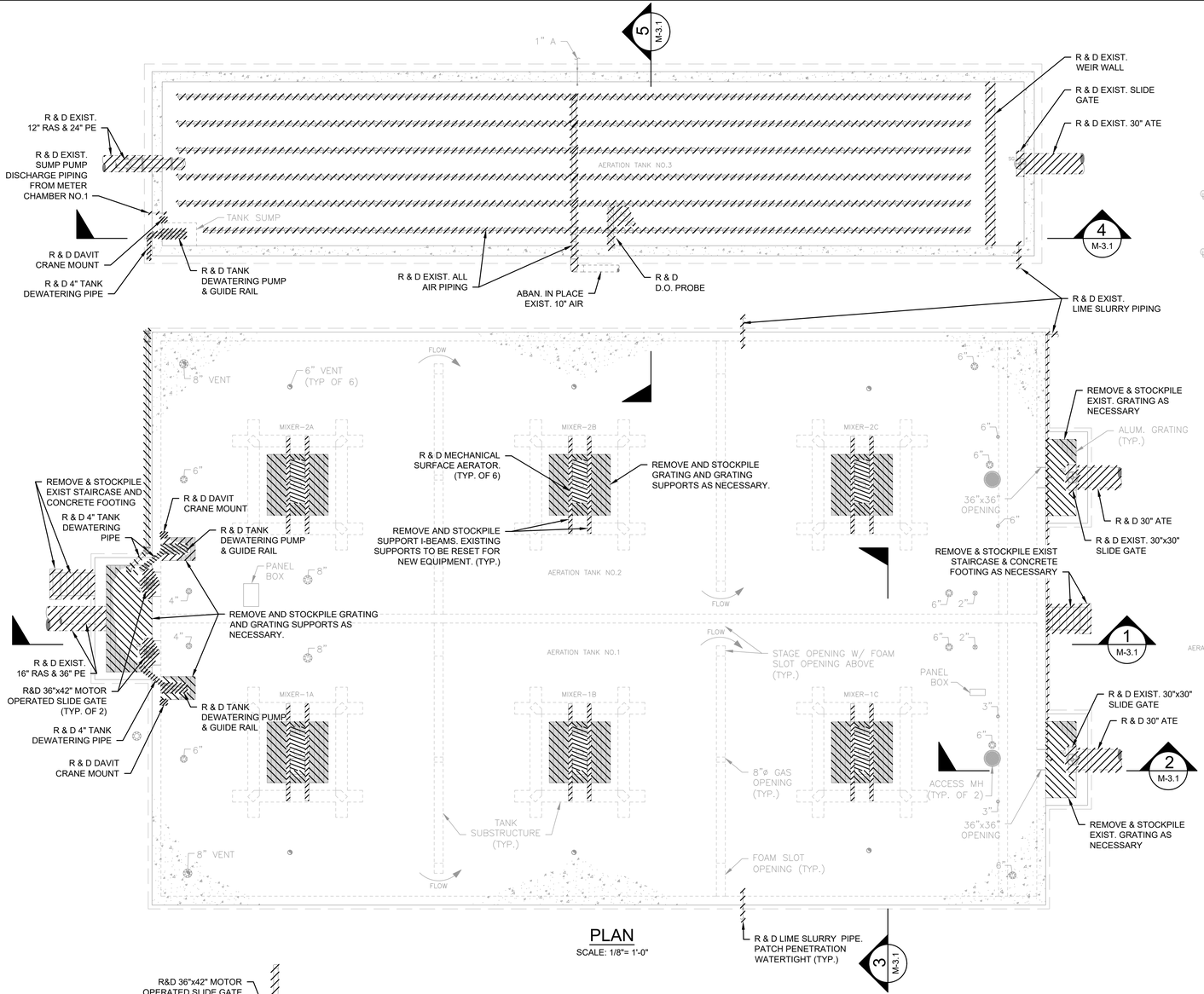

PLAN
SCALE: 1/8"= 1'-0"

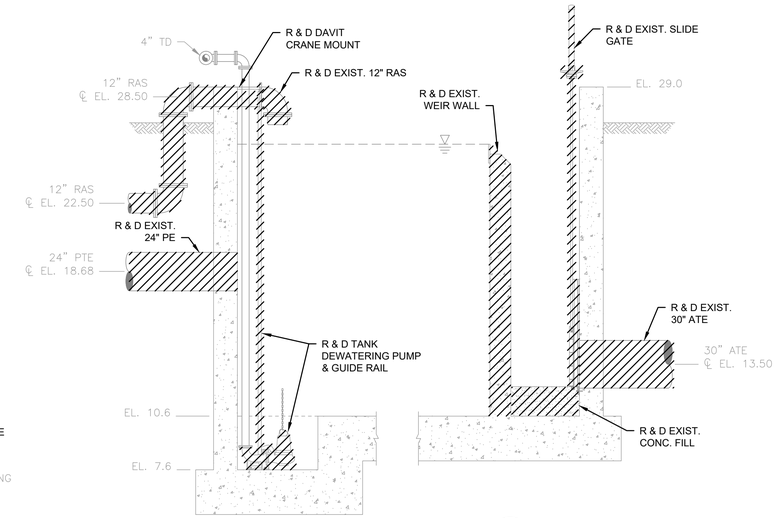

SECTION 4
SCALE: 1/4"= 1'-0"
M-3.1

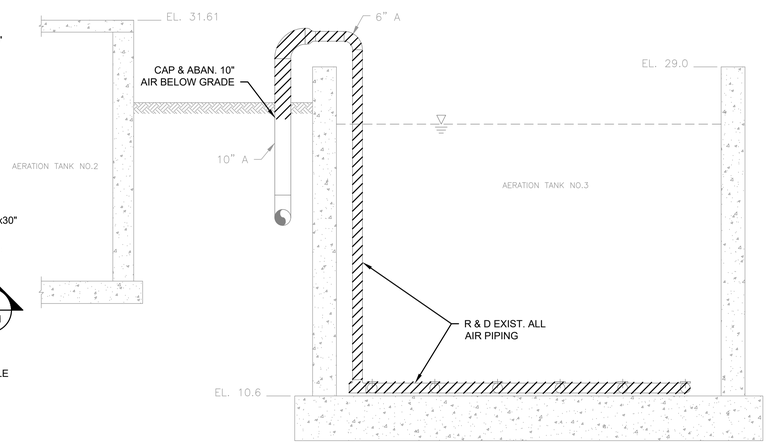

SECTION 5
SCALE: 1/4"= 1'-0"
M-3.1

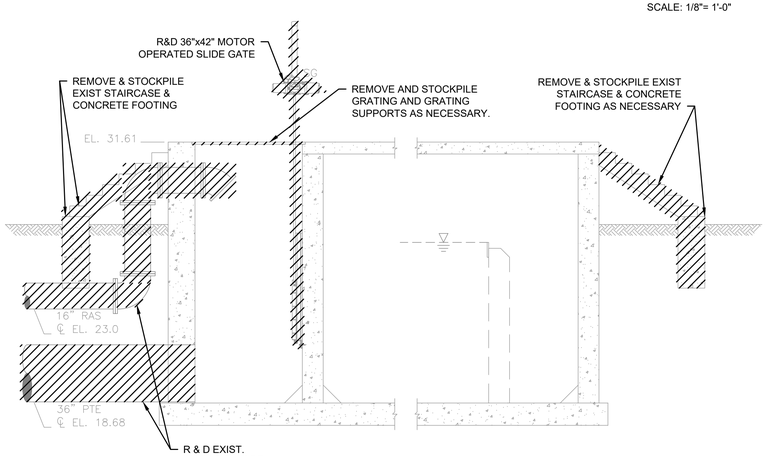

SECTION 1
SCALE: 1/4"= 1'-0"
M-3.1

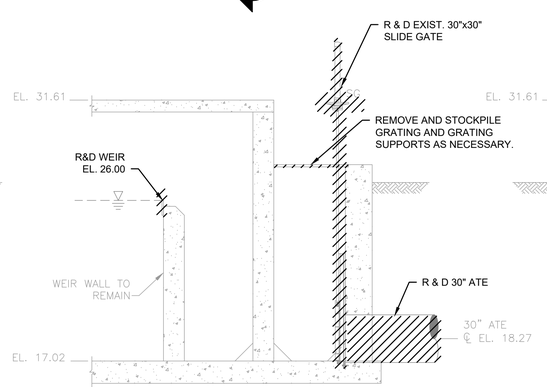

SECTION 2
SCALE: 1/4"= 1'-0"
M-3.1

NOTE:
WORK SHOWN ON THIS PLAN SHALL BE SEQUENCED AND SCHEDULED WITH THE CONTRACTOR'S SUBMITTED AND APPROVED SEQUENCE OF CONSTRUCTION.

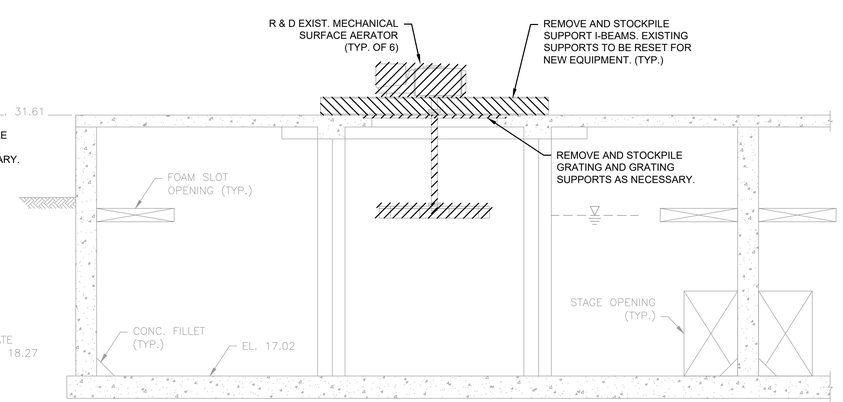

SECTION 3
SCALE: 1/4"= 1'-0"
M-3.1

PREPARED BY

BETA
www.BETA-Inc.com

REGISTERED PROFESSIONAL

COMMONWEALTH OF MASSACHUSETTS
JOSEPH FEDERICO, JR.
No. 30663
REGISTERED PROFESSIONAL ENGINEER

SUBCONSULTANT

PROJECT

Taunton Wastewater Treatment Facility Improvements Phase 2

Taunton, MA

TITLE

Aeration Tanks No.1, 2 & 3 Demolition Plans & Sections

NO.	REVISIONS	DATE

DRAWN BY:	BM
DESIGNED BY:	BM
CHECKED BY:	SR
ISSUE DATE:	3/31/2022
BETA JOB NO.:	6050

SCALE

AS SHOWN

UNLESS OTHERWISE NOTED OR CHANGED BY REPRODUCTION

SHEET NO.

M-3.1

3/31/2022 10:09 AM J:\TAUNTON\WWTF DESIGN\AUTOCAD\PLAN SET\PHASE 2\AERATION TANKS - EXIST. PLANS & SECTIONS.DWG (BETA STD BW.CTB)

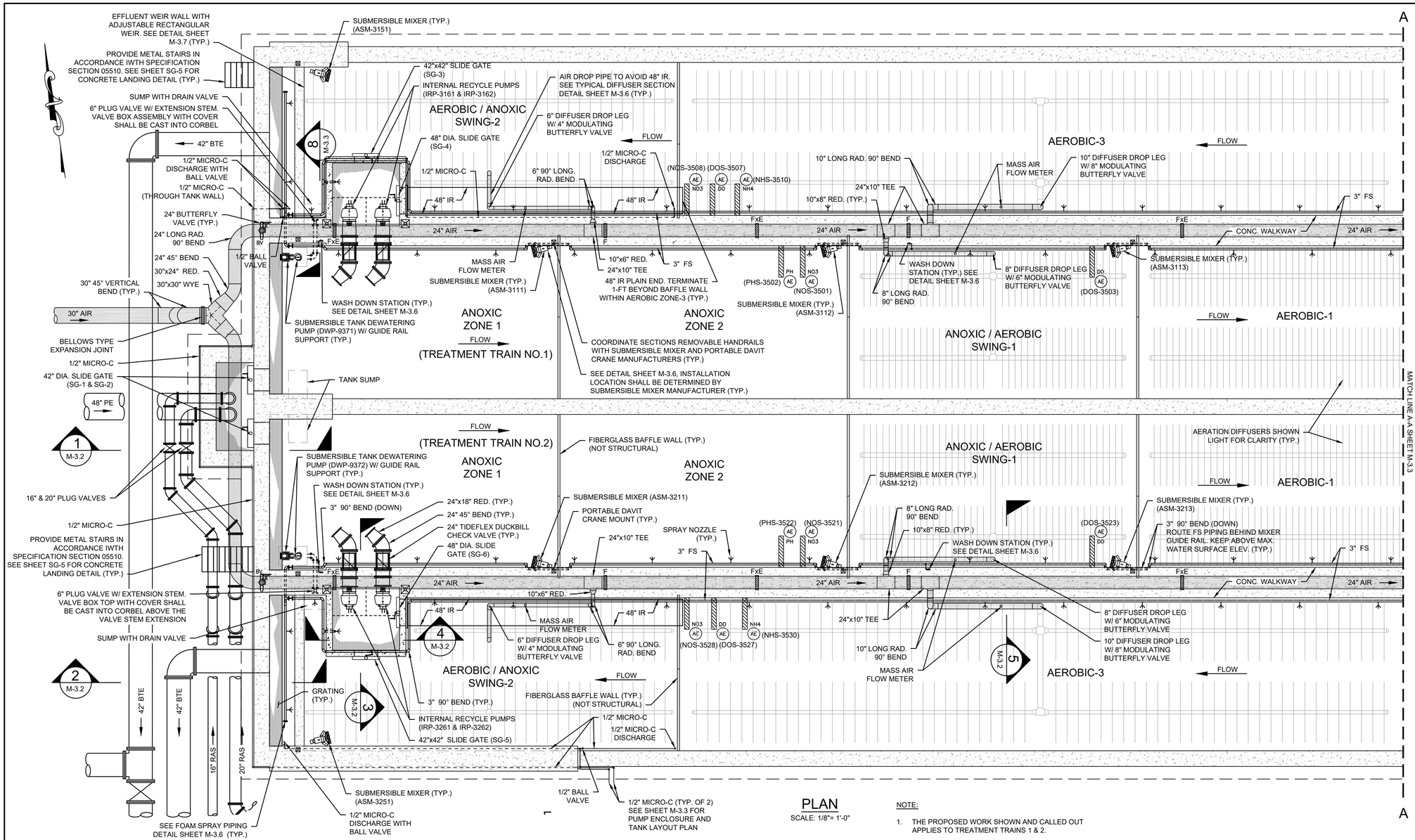

PLAN

SCALE: 1/8"= 1'-0"

NOTE:

1. THE PROPOSED WORK SHOWN AND CALLED OUT APPLIES TO TREATMENT TRAINS 1 & 2.

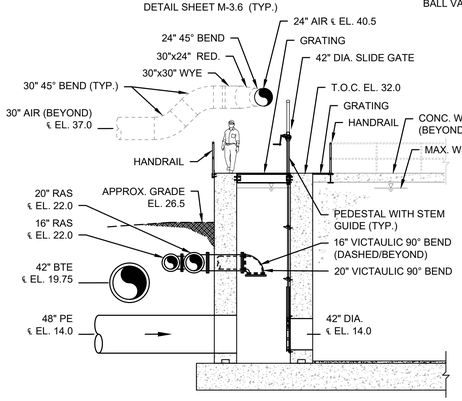

SECTION 1 — SCALE: 1/8"= 1'-0" — M-3.2

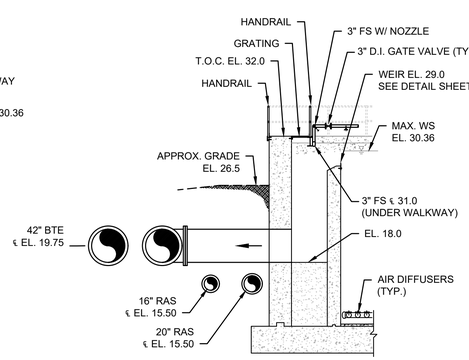

SECTION 2 — SCALE: 1/8"= 1'-0" — M-3.2

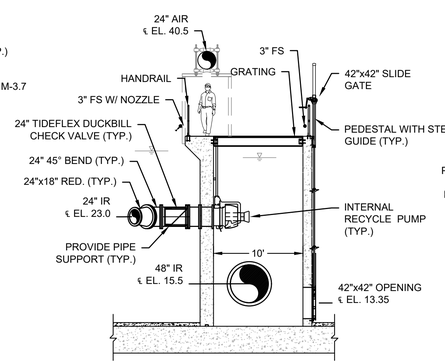

SECTION 3 — SCALE: 1/8"= 1'-0" — M-3.2

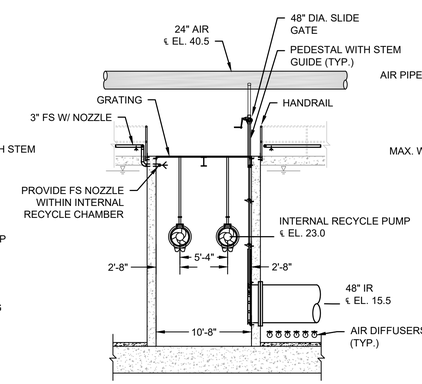

SECTION 4 — SCALE: 1/8"= 1'-0" — M-3.2

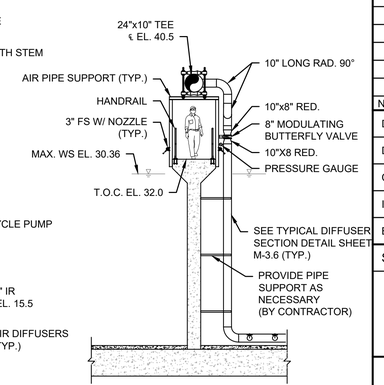

SECTION 5 — SCALE: 1/8"= 1'-0" — M-3.2

PREPARED BY

BETA
www.BETA-Inc.com

REGISTERED PROFESSIONAL

COMMONWEALTH OF MASSACHUSETTS — JOSEPH FEDERICO, JR. No. 30880 — REGISTERED PROFESSIONAL ENGINEER

SUBCONSULTANT

PROJECT

Taunton Wastewater Treatment Facility Improvements Phase 2

Taunton, MA

TITLE

Biological Treatment Reactor Plan & Sections I

NO.	REVISIONS	DATE

DRAWN BY:	BM
DESIGNED BY:	SR
CHECKED BY:	JD
ISSUE DATE:	3/31/2022
BETA JOB NO.:	6050

SCALE

AS SHOWN

UNLESS OTHERWISE NOTED OR CHANGED BY REPRODUCTION

SHEET NO.

M-3.2

3/31/2022 11:55 AM J:\TAUNTON\WWTF DESIGN\AUTOCAD\PLAN SET\PHASE 2\AERATION TANKS - PROP PLANS & SECTIONS_ALT.DWG (BETA STB BW.STB)

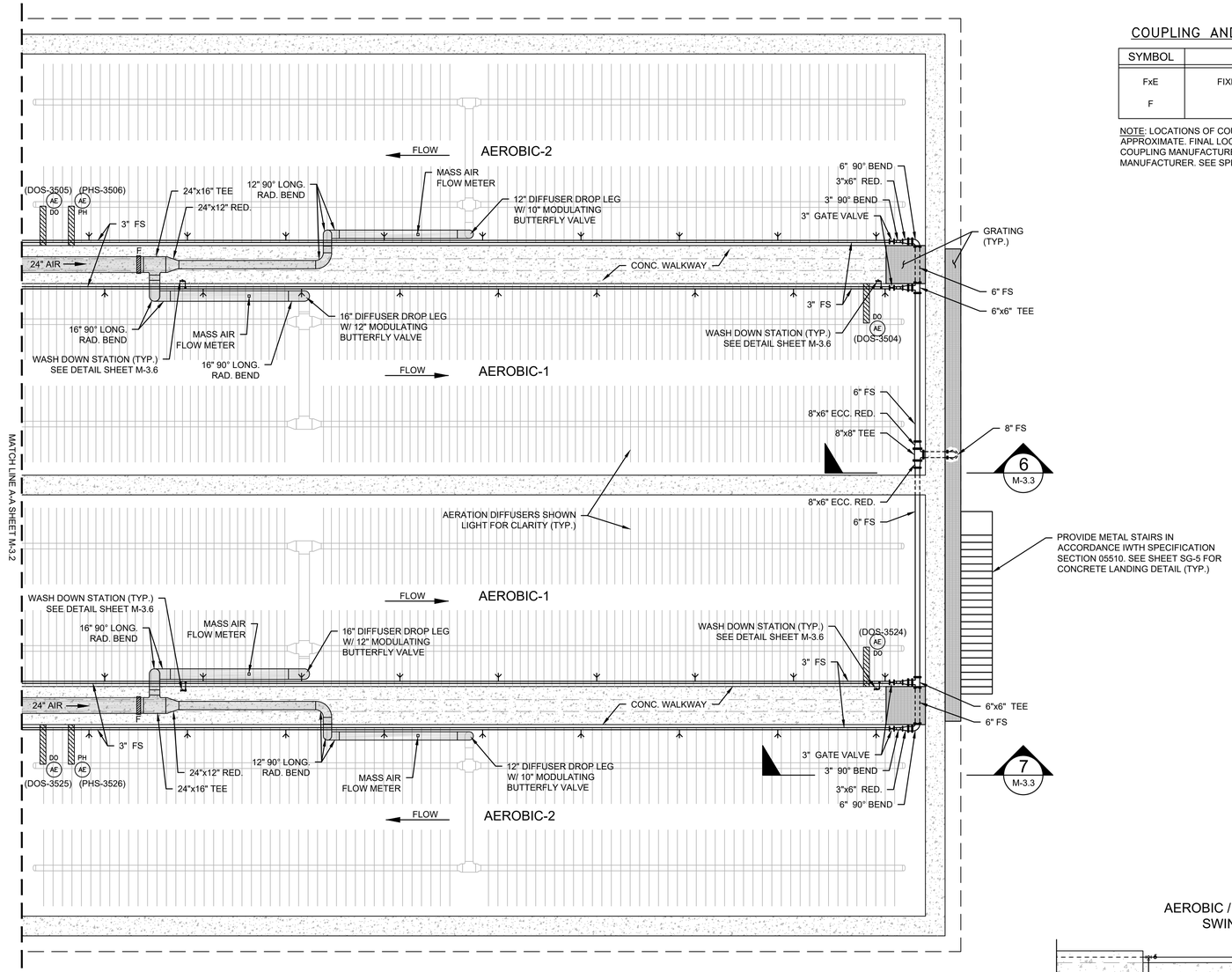

PLAN

SCALE: 1/8"= 1'-0"

COUPLING AND SUPPORT LEGEND

SYMBOL	DEFINITION
FxE	FIXED x EXPANSION COUPLING
F	FIXED SUPPORT

NOTE: LOCATIONS OF COUPLINGS AND SUPPORTS ARE APPROXIMATE. FINAL LOCATIONS TO BE DETERMINED BY COUPLING MANUFACTURER AND COORDINATED WITH PIPE MANUFACTURER. SEE SPECIFICATION SECTION 15066.

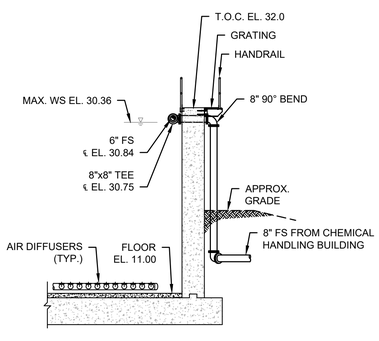

SECTION 6 M-3.3

SCALE: 1/8"= 1'-0"

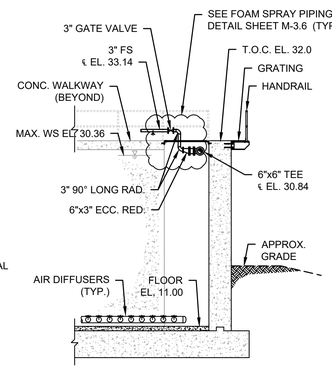

SECTION 7 M-3.3

SCALE: 1/8"= 1'-0"

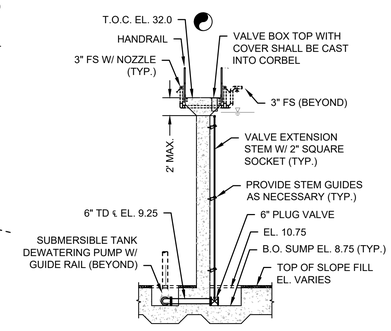

SECTION 8 M-3.2

SCALE: 1/8"= 1'-0"

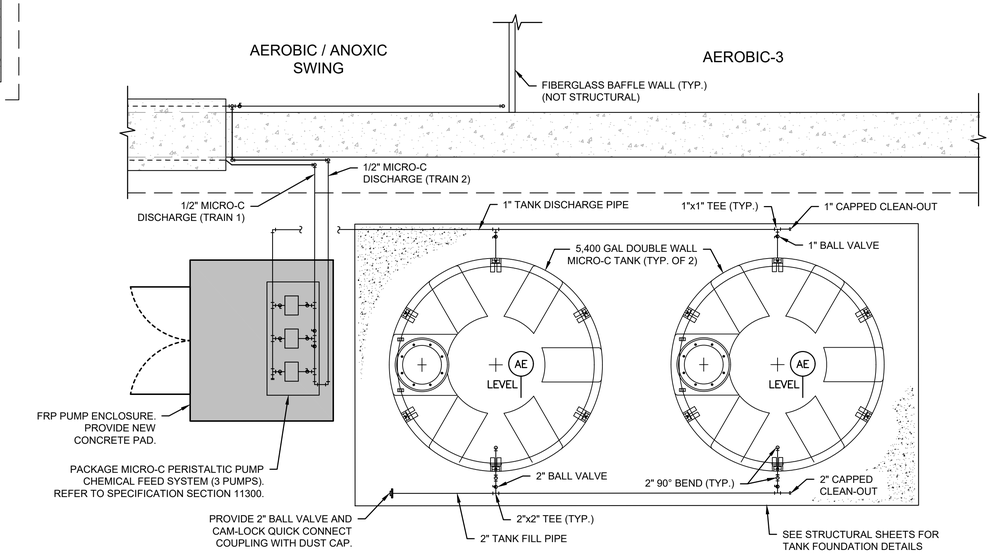

MICRO-C TANK & PUMP ENCLOSURE PLAN

SCALE: 1/4"= 1'-0"

PREPARED BY

BETA
www.BETA-Inc.com

REGISTERED PROFESSIONAL

COMMONWEALTH OF MASSACHUSETTS
JOSEPH FEDERICO, JR.
No. 30883
REGISTERED PROFESSIONAL ENGINEER

SUBCONSULTANT

PROJECT

Taunton Wastewater Treatment Facility Improvements Phase 2

Taunton, MA

TITLE

Biological Treatment Reactor Plan & Sections II

NO.	REVISIONS	DATE

DRAWN BY:	BM
DESIGNED BY:	SR
CHECKED BY:	JD
ISSUE DATE:	3/31/2022
BETA JOB NO.:	6050

SCALE

AS SHOWN

UNLESS OTHERWISE NOTED OR CHANGED BY REPRODUCTION

SHEET NO.

M-3.3

3/31/2022 10:10 AM J:\TAUNTON\WWTF DESIGN\AUTOCAD\PLAN SET\PHASE 2\AERATION TANKS - PROP PLANS & SECTIONS_ALT.DWG (BETA STD BW CTB)

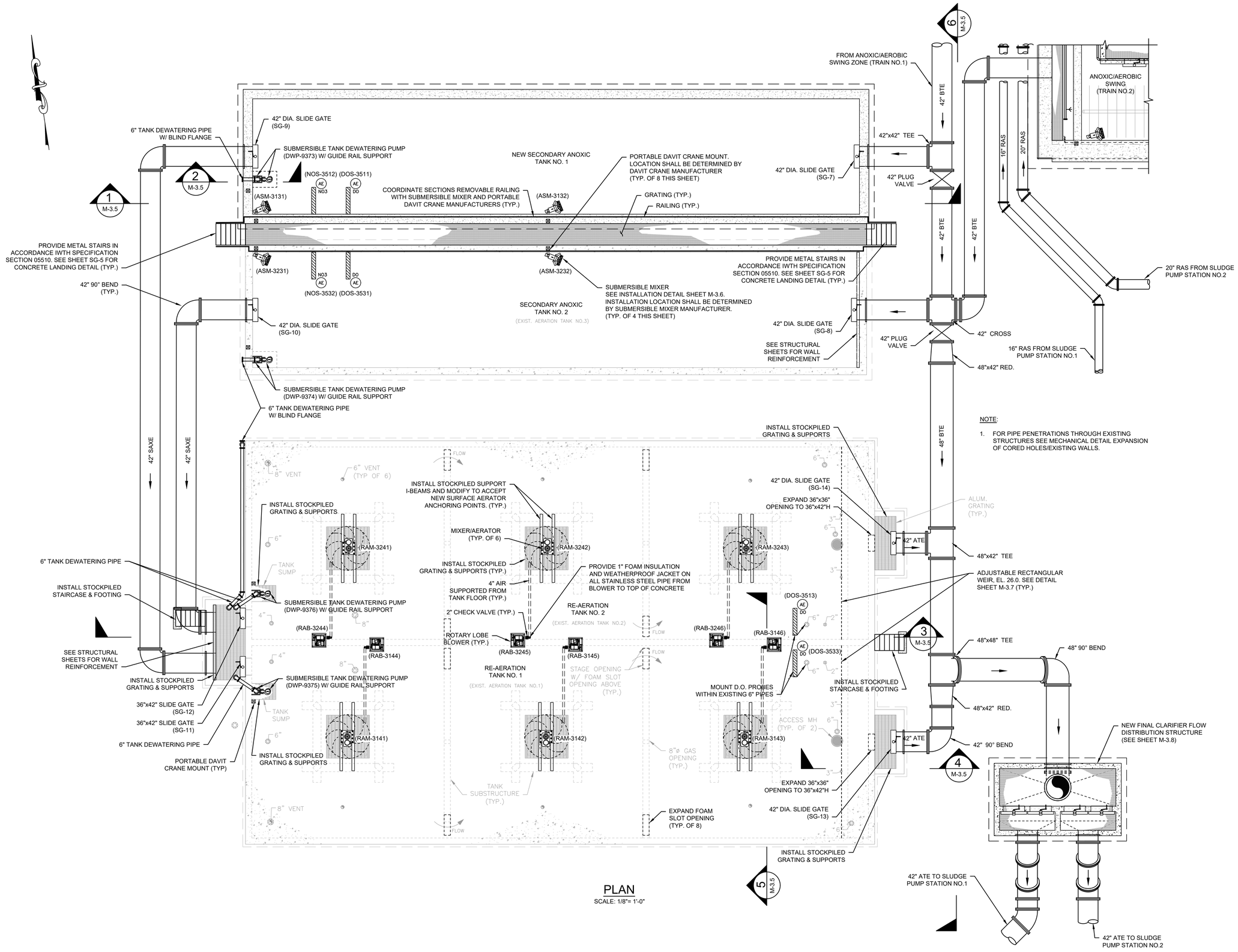

NOTE:

1. FOR PIPE PENETRATIONS THROUGH EXISTING STRUCTURES SEE MECHANICAL DETAIL EXPANSION OF CORED HOLES/EXISTING WALLS.

PLAN

SCALE: 1/8"= 1'-0"

PREPARED BY

BETA
www.BETA-Inc.com

REGISTERED PROFESSIONAL

COMMONWEALTH OF MASSACHUSETTS
JOSEPH FEDERICO, JR.
No. 30869
REGISTERED PROFESSIONAL ENGINEER

SUBCONSULTANT

PROJECT

Taunton Wastewater Treatment Facility Improvements Phase 2

Taunton, MA

TITLE

Secondary Anoxic & Re-Aeration Tanks No.1 & 2 Plans

NO.	REVISIONS	DATE

DRAWN BY:	BM
DESIGNED BY:	BM
CHECKED BY:	SR
ISSUE DATE:	3/31/2022
BETA JOB NO.:	6050

SCALE

AS SHOWN

UNLESS OTHERWISE NOTED OR CHANGED BY REPRODUCTION

SHEET NO.

M-3.4

3/31/2022 10:10 AM J:\TAUNTON\WWTF DESIGN\AUTOCAD\PLAN SET\PHASE 2\AERATION TANKS - PROP PLANS & SECTIONS_ALT.DWG (BETA STD B\W.CTB)

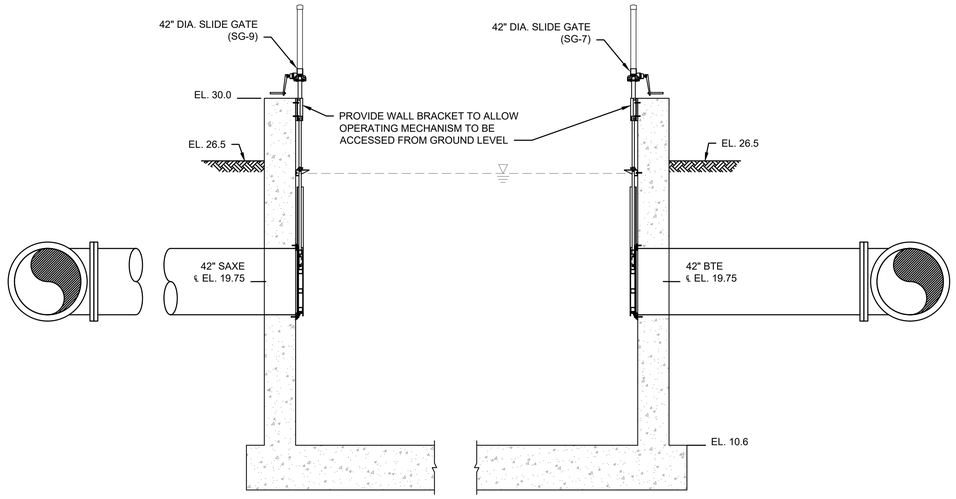

SECTION 1
SCALE: 1/4"= 1'-0" M-3.4

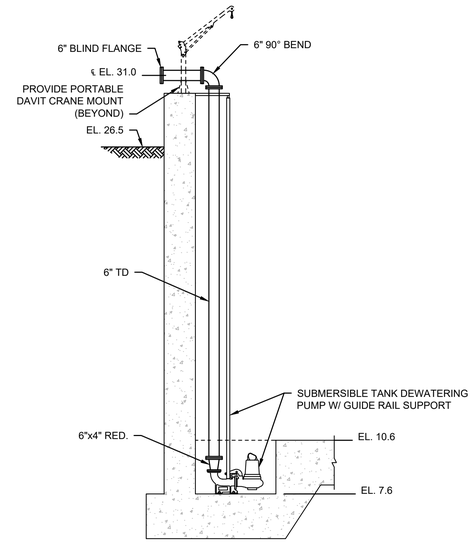

SECTION 2
SCALE: 1/4"= 1'-0" M-3.4

NOTE:

1. FOR PIPE PENETRATIONS THROUGH EXISTING STRUCTURES SEE MECHANICAL DETAIL EXPANSION OF CORED HOLES/EXISTING WALLS.

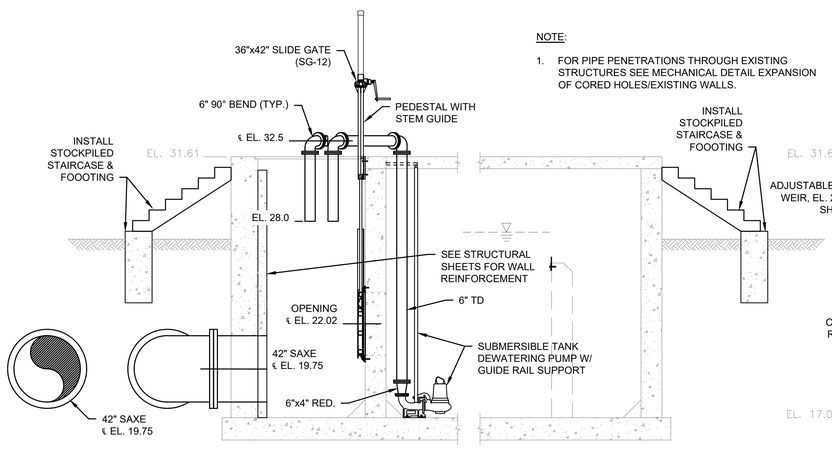

SECTION 3
SCALE: 1/4"= 1'-0" M-3.4

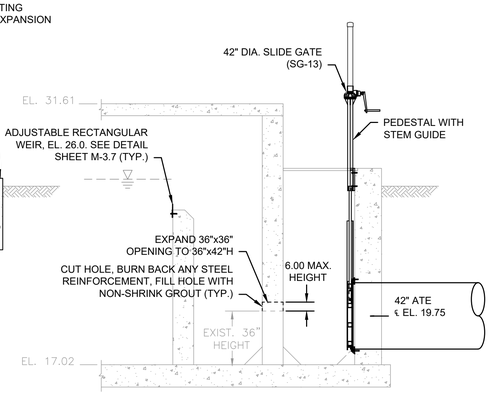

SECTION 4
SCALE: 1/4"= 1'-0" M-3.4

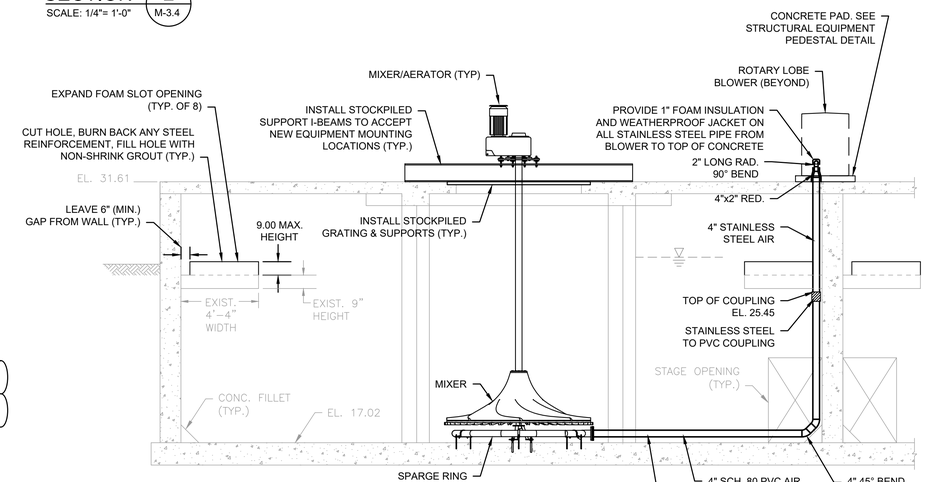

SECTION 5
SCALE: 1/4"= 1'-0" M-3.4

NOTE:

1. DEPTHS OF EXISTING YARD PIPING ARE APPROXIMATE.
2. THE CONTRACTOR SHALL CONDUCT TEST PITS, AS REQUIRED, IN ORDER TO ASCERTAIN THE EXACT LOCATION OF EXISTING UNDERGROUND UTILITIES.

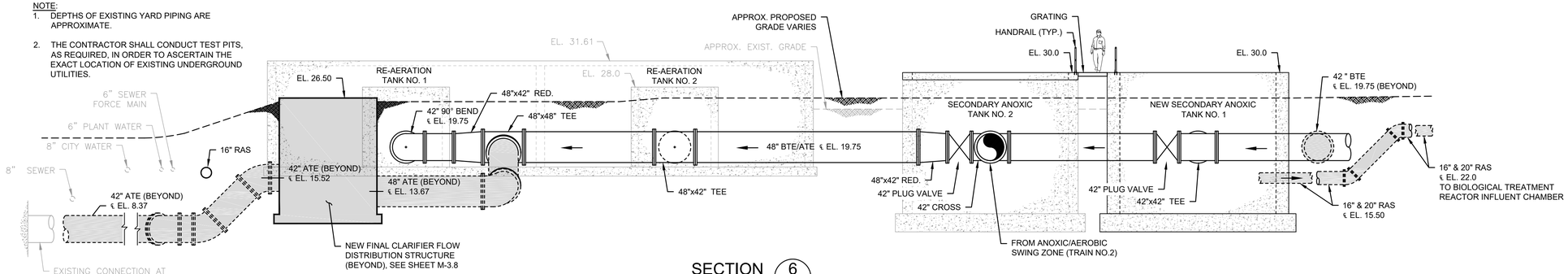

SECTION 6
SCALE: 1/8"= 1'-0" M-3.4

PREPARED BY

BETA
www.BETA-Inc.com

REGISTERED PROFESSIONAL

COMMONWEALTH OF MASSACHUSETTS
JOSEPH FEDERICO, JR.
No. 30853
REGISTERED PROFESSIONAL ENGINEER

SUBCONSULTANT

PROJECT

Taunton Wastewater Treatment Facility Improvements Phase 2

Taunton, MA

TITLE

Secondary Anoxic & Re-Aeration Tanks No.1 & 2 Sections

NO.	REVISIONS	DATE

DRAWN BY:	BM
DESIGNED BY:	BM
CHECKED BY:	SR
ISSUE DATE:	3/31/2022
BETA JOB NO.:	6050

SCALE

AS SHOWN

UNLESS OTHERWISE NOTED OR CHANGED BY REPRODUCTION

SHEET NO.

M-3.5

3/31/2022 10:10 AM J:\TAUNTON\WWTF DESIGN\AUTOCAD\PLAN SET\PHASE 2\AERATION TANKS - PROP PLANS & SECTIONS_ALT.DWG (BETA STD BW CTB)

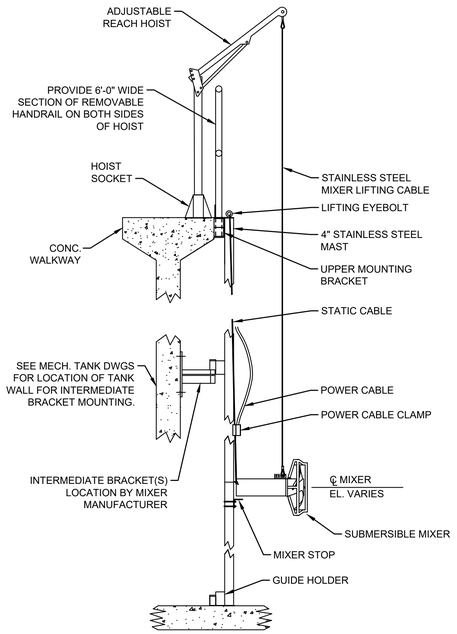

SUBMERSIBLE MIXER DETAIL

SCALE: NOT TO SCALE

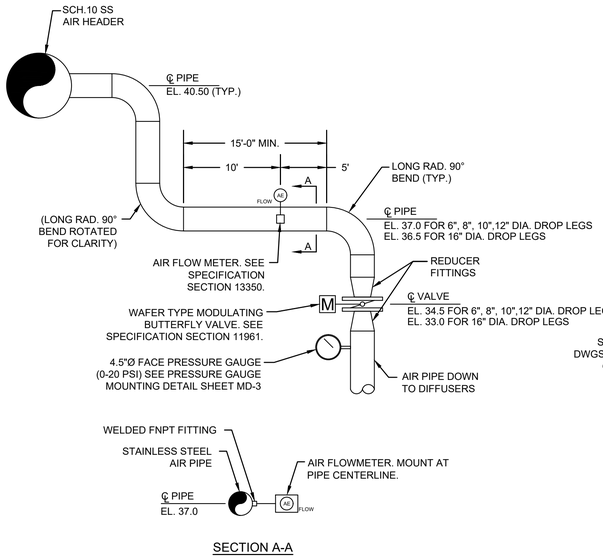

SECTION A-A

TYPICAL AIR DROP PIPE DETAIL

SCALE: NOT TO SCALE

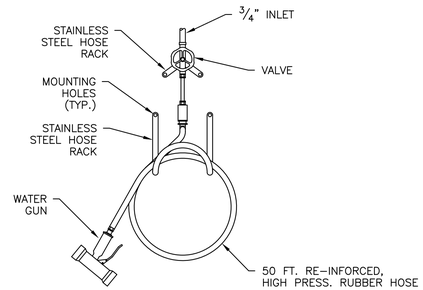

WASH DOWN STATION DETAIL

SCALE: NOT TO SCALE

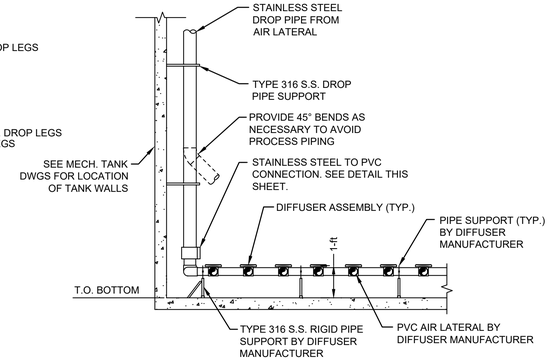

TYPICAL DIFFUSER SECTION

SCALE: NOT TO SCALE

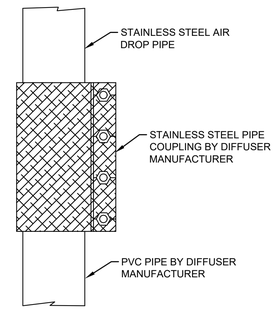

NOTES

1. STAINLESS STEEL COUPLING TO BE JCM 131 OR EQUAL.
2. COUPLING TO BE INSTALLED MIN. OF 2 FT. BELOW LOW WATER LEVEL.
3. STAINLESS STEEL DROP PIPE DIAMETERS AS SHOWN ON SHEETS M-3.2 & M-3.3.

STAINLESS STEEL DROP PIPE TO PVC CONNECTION

SCALE: NOT TO SCALE

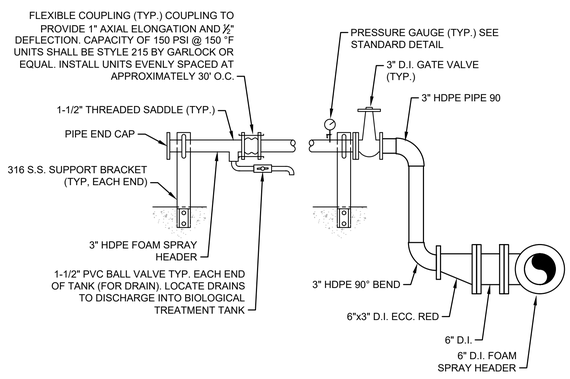

FOAM SPRAY PIPING DETAIL

SCALE: NOT TO SCALE

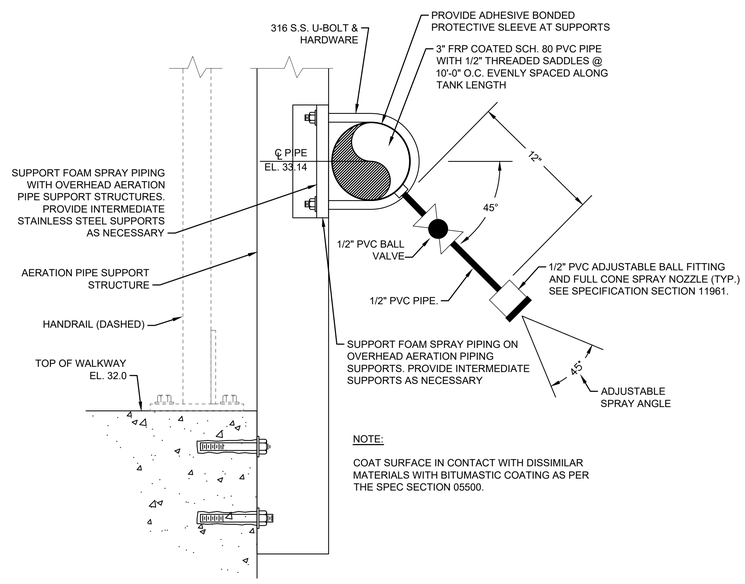

NOTE:

COAT SURFACE IN CONTACT WITH DISSIMILAR MATERIALS WITH BITUMASTIC COATING AS PER THE SPEC SECTION 05500.

FOAM SPRAY NOZZLE & PIPING SUPPORT DETAIL

SCALE: NOT TO SCALE

PREPARED BY

BETA
www.BETA-Inc.com

REGISTERED PROFESSIONAL

COMMONWEALTH OF MASSACHUSETTS
JOSEPH FEDERICO, JR.
No. 30853
REGISTERED PROFESSIONAL ENGINEER

SUBCONSULTANT

PROJECT

Taunton Wastewater Treatment Facility Improvements Phase 2

Taunton, MA

TITLE

Biological Treatment Details I

NO.	REVISIONS	DATE

DRAWN BY:	BM
DESIGNED BY:	BM
CHECKED BY:	SR
ISSUE DATE:	3/31/2022
BETA JOB NO.:	6050

SCALE

AS SHOWN

UNLESS OTHERWISE NOTED OR CHANGED BY REPRODUCTION

SHEET NO.

M-3.6

3/31/2022 10:10 AM J:\TAUNTON\WTF DESIGN\AUTOCAD\PLAN SET\PHASE 2\AERATION TANKS - PROP PLANS & SECTIONS_ALT.DWG (BETA STD BW.CTB)

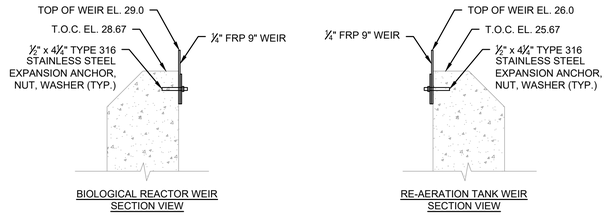

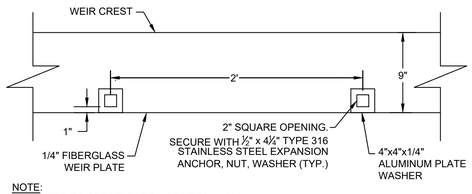

NOTE:
1. REFER TO SPECIFICATION SECTION 11601.

TYPICAL ADJUSTABLE RECTANGULAR WEIR

SCALE: NOT TO SCALE

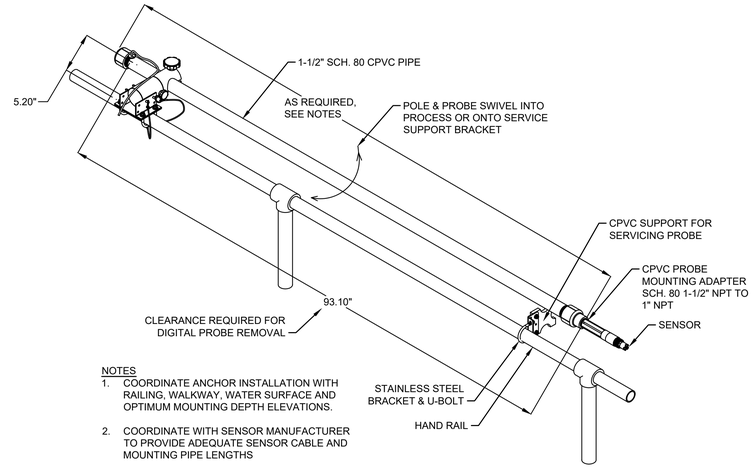

NOTES
1. COORDINATE ANCHOR INSTALLATION WITH RAILING, WALKWAY, WATER SURFACE AND OPTIMUM MOUNTING DEPTH ELEVATIONS.
2. COORDINATE WITH SENSOR MANUFACTURER TO PROVIDE ADEQUATE SENSOR CABLE AND MOUNTING PIPE LENGTHS

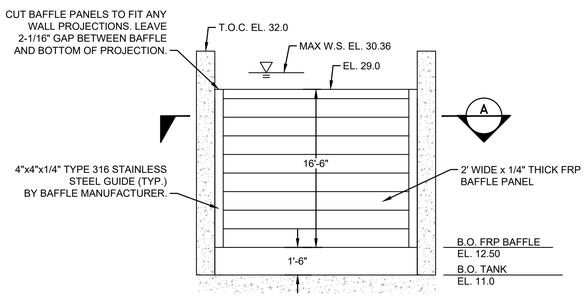

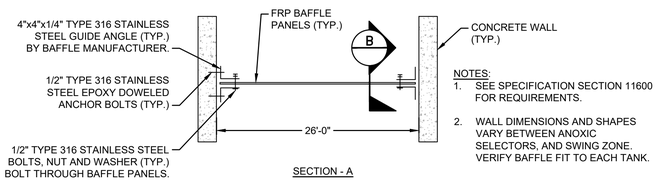

NOTES:
1. SEE SPECIFICATION SECTION 11600 FOR REQUIREMENTS.
2. WALL DIMENSIONS AND SHAPES VARY BETWEEN ANOXIC SELECTORS, AND SWING ZONE. VERIFY BAFFLE FIT TO EACH TANK.

SECTION - A

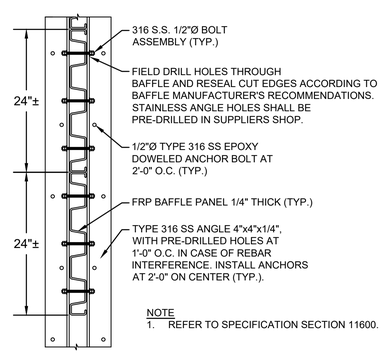

NOTE
1. REFER TO SPECIFICATION SECTION 11600.

SECTION - B

BIOLOGICAL TREATMENT REACTOR BAFFLE WALL DETAIL

SCALE: NOT TO SCALE

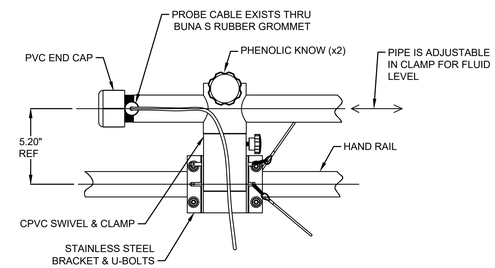

TYPICAL pH & D.O. SENSOR IMMERSION MOUNT DETAIL

SCALE: NOT TO SCALE

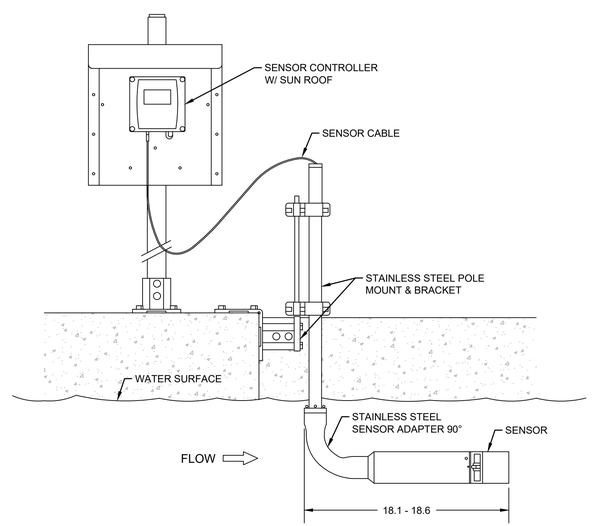

TYPICAL NO3 SENSOR MOUNT DETAIL

SCALE: NOT TO SCALE

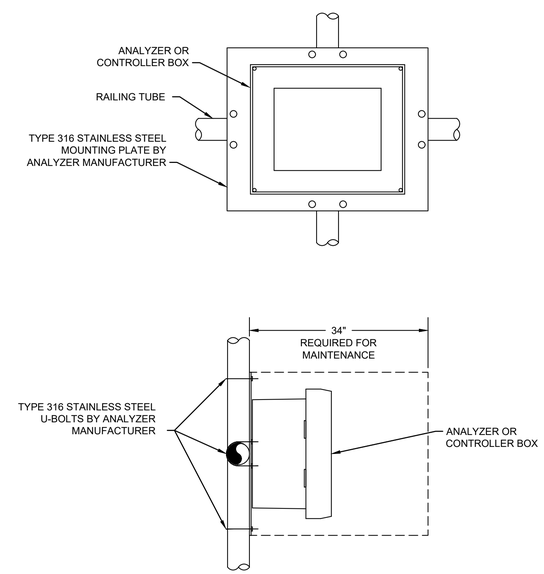

TYPICAL ANALYZER OR SENSOR CONTROLLER REAR RAIL MOUNTING DETAIL

SCALE: NOT TO SCALE

PREPARED BY

BETA
www.BETA-Inc.com

REGISTERED PROFESSIONAL

COMMONWEALTH OF MASSACHUSETTS
JOSEPH FEDERICO, JR.
No. 30853
REGISTERED PROFESSIONAL ENGINEER

SUBCONSULTANT

PROJECT

Taunton Wastewater Treatment Facility Improvements Phase 2

Taunton, MA

TITLE

Biological Treatment Details II

NO.	REVISIONS	DATE

DRAWN BY:	BM
DESIGNED BY:	BM
CHECKED BY:	SR
ISSUE DATE:	3/31/2022
BETA JOB NO.:	6050

SCALE

AS SHOWN

UNLESS OTHERWISE NOTED OR CHANGED BY REPRODUCTION

SHEET NO.

M-3.7

3/31/2022 10:10 AM J:\TAUNTON\WWTF DESIGN\AUTOCAD\PLAN SET\PHASE 2\AERATION TANKS - PROP PLANS & SECTIONS_ALT.DWG (BETA STD BW CTB)

NOTE:
1. DEPTHS OF EXISTING YARD PIPING ARE APPROXIMATE.
2. THE CONTRACTOR SHALL CONDUCT TEST PITS, AS REQUIRED, IN ORDER TO ASCERTAIN THE EXACT LOCATION OF EXISTING UNDERGROUND UTILITIES.

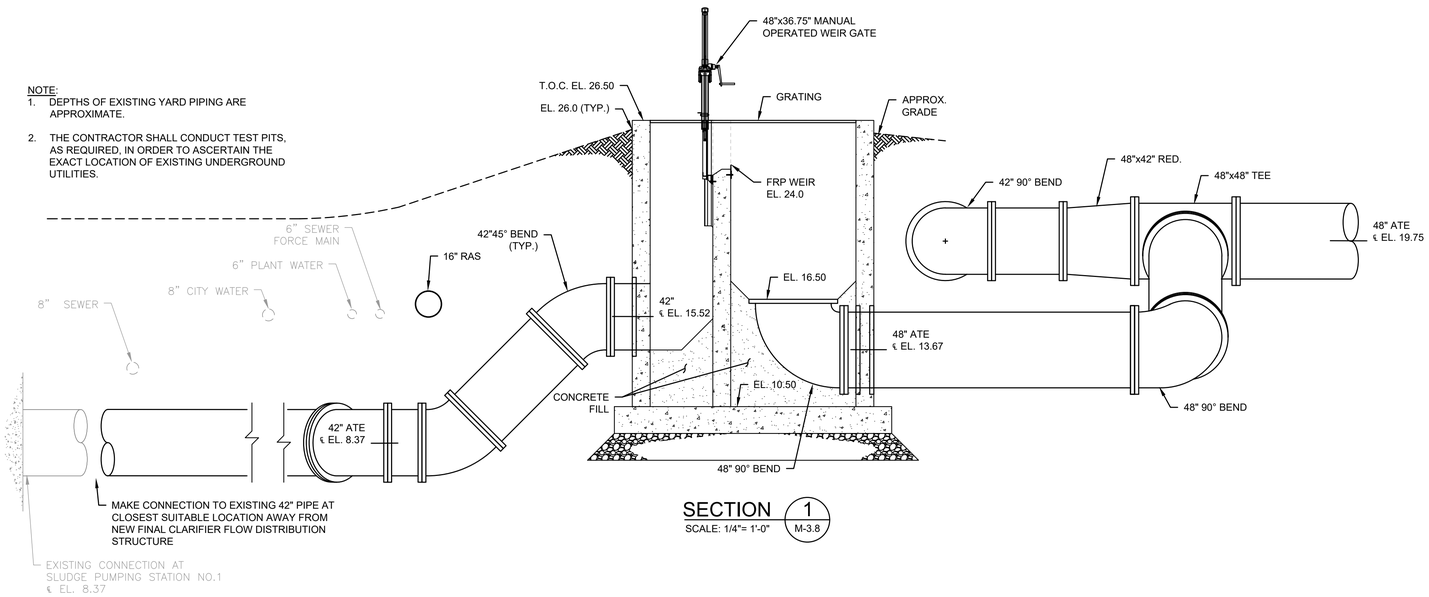

SECTION 1 / M-3.8
SCALE: 1/4"= 1'-0"

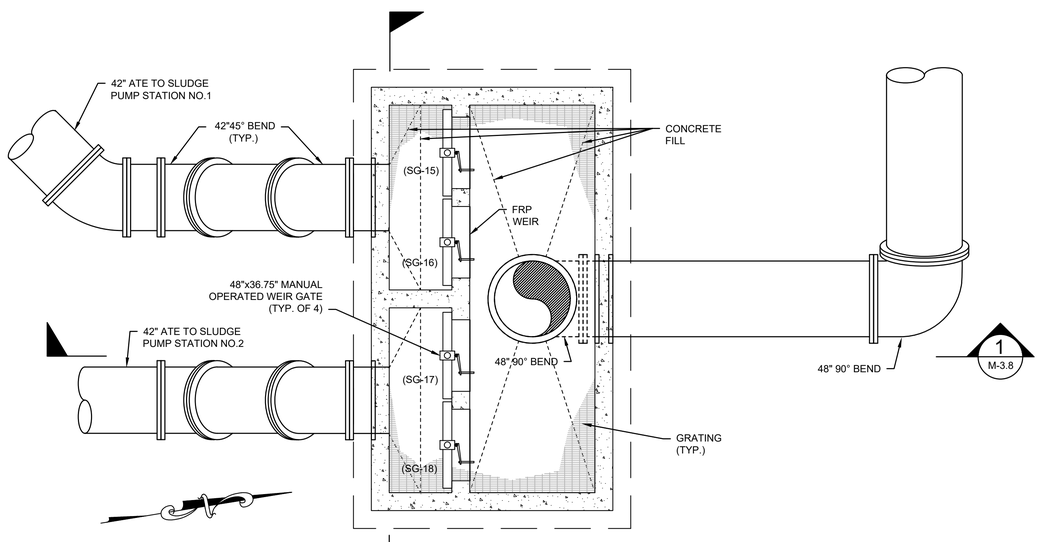

PLAN
SCALE: 1/4"= 1'-0"

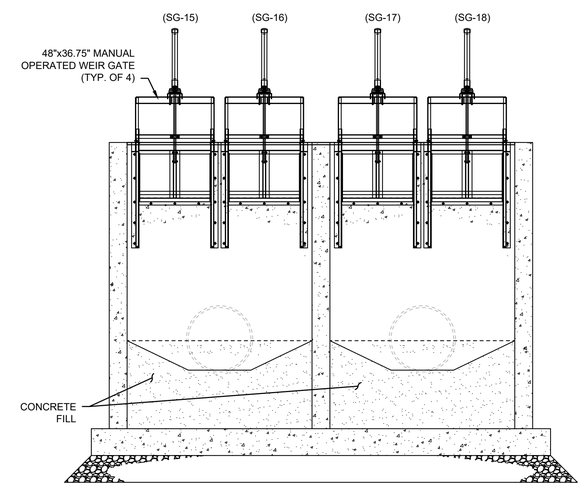

SECTION 2 / M-3.8
SCALE: 1/4"= 1'-0"

PREPARED BY

BETA
www.BETA-Inc.com

REGISTERED PROFESSIONAL

COMMONWEALTH OF MASSACHUSETTS
JOSEPH FEDERICO, JR.
No. 30850
REGISTERED PROFESSIONAL ENGINEER

SUBCONSULTANT

PROJECT

Taunton Wastewater Treatment Facility Improvements Phase 2

Taunton, MA

TITLE

Final Clarifier Flow Distribution Structure Plans & Sections

NO.	REVISIONS	DATE

DRAWN BY:	BM
DESIGNED BY:	BM
CHECKED BY:	SR
ISSUE DATE:	3/31/2022
BETA JOB NO.:	6050

SCALE

AS SHOWN

UNLESS OTHERWISE NOTED OR CHANGED BY REPRODUCTION

SHEET NO.

M-3.8

3/31/2022 10:10 AM J:\TAUNTON\WWTF DESIGN\AUTOCAD\PLAN SET\PHASE 2\AERATION TANKS - PROP PLANS & SECTIONS_ALT.DWG (BETA STD BW.CTB)

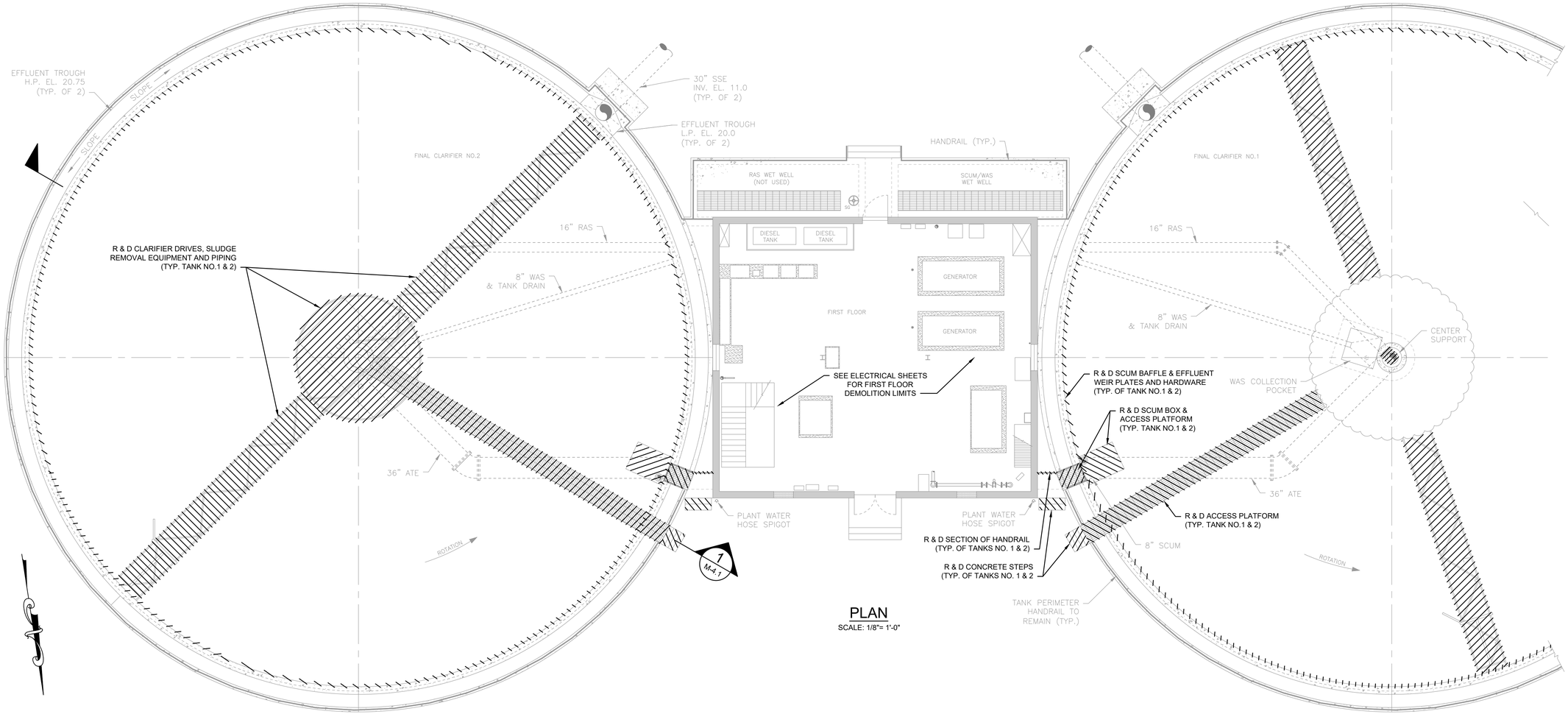

PLAN

SCALE: 1/8"= 1'-0"

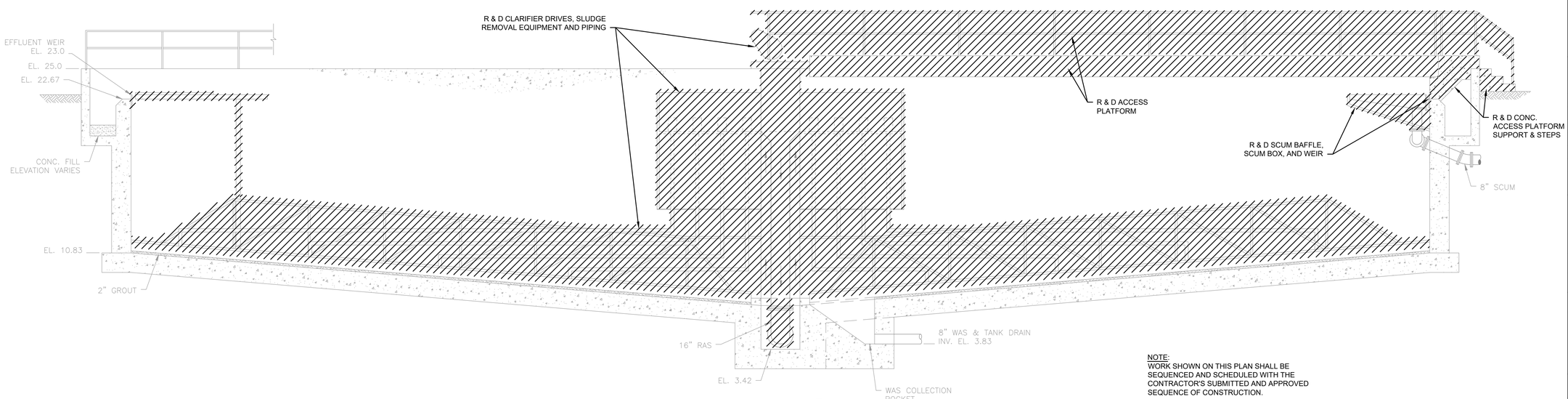

SECTION 1 M-4.1

SCALE: 1/4"= 1'-0"

NOTE:
WORK SHOWN ON THIS PLAN SHALL BE SEQUENCED AND SCHEDULED WITH THE CONTRACTOR'S SUBMITTED AND APPROVED SEQUENCE OF CONSTRUCTION.

PREPARED BY

BETA
www.BETA-Inc.com

REGISTERED PROFESSIONAL

COMMONWEALTH OF MASSACHUSETTS
JOSEPH FEDERICO, JR.
No. 30663
REGISTERED PROFESSIONAL ENGINEER

SUBCONSULTANT

PROJECT

Taunton Wastewater Treatment Facility Improvements Phase 2

Taunton, MA

TITLE

Final Clarifiers No.1 & 2 Demolition Plan & Section

NO.	REVISIONS	DATE

DRAWN BY:	BM
DESIGNED BY:	BM
CHECKED BY:	SR
ISSUE DATE:	3/31/2022
BETA JOB NO.:	6050

SCALE

AS SHOWN

UNLESS OTHERWISE NOTED OR CHANGED BY REPRODUCTION

SHEET NO.

M-4.1

3/31/2022 10:10 AM J:\TAUNTON\WWTF DESIGN\AUTOCAD\PLAN SET\PHASE 2\SECONDARY SETTLING TANKS - EXIST. PLANS & SECTIONS.DWG (BETA STD BW.CTB)

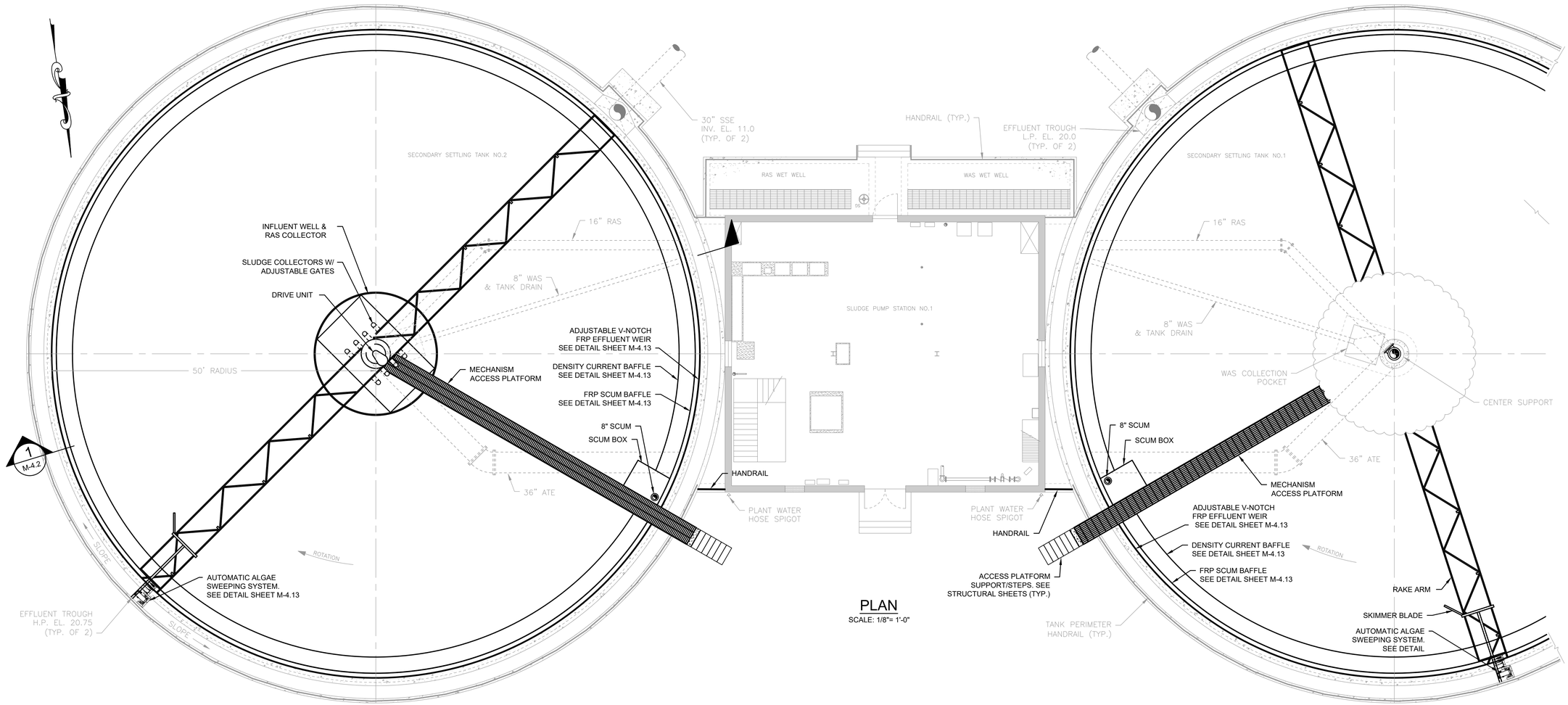

PLAN

SCALE: 1/8"= 1'-0"

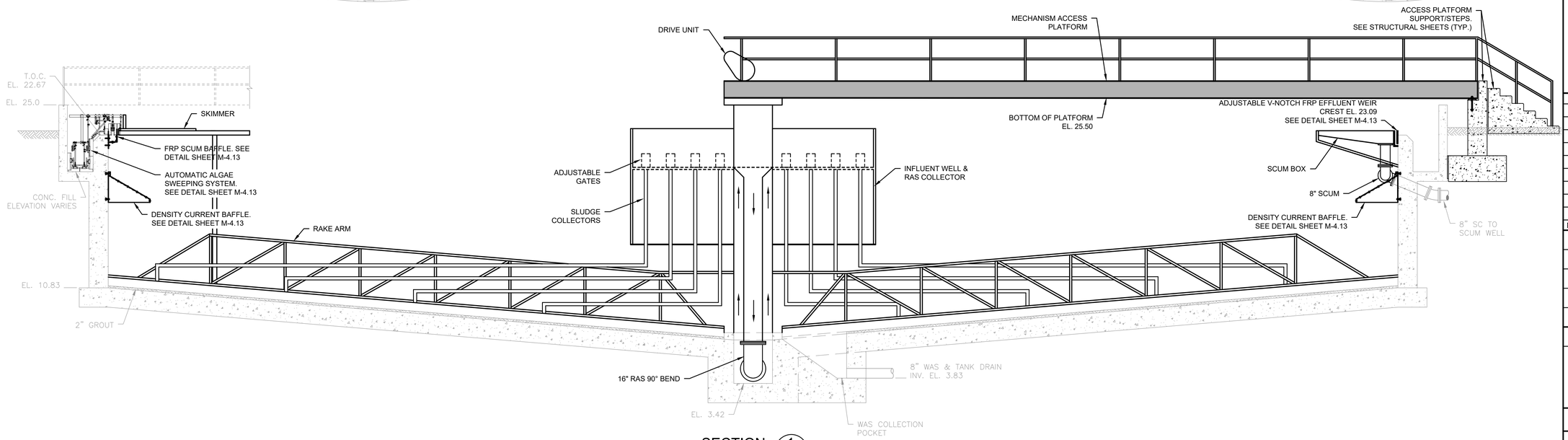

SECTION 1 / M-4.2

SCALE: 1/4"= 1'-0"

PREPARED BY

BETA
www.BETA-Inc.com

REGISTERED PROFESSIONAL

COMMONWEALTH OF MASSACHUSETTS
JOSEPH FEDERICO, JR.
No. 30663
REGISTERED PROFESSIONAL ENGINEER

SUBCONSULTANT

PROJECT

Taunton Wastewater Treatment Facility Improvements Phase 2

Taunton, MA

TITLE

Final Clarifiers No.1 & 2
Plan & Section

NO.	REVISIONS	DATE

DRAWN BY:	BM
DESIGNED BY:	BM
CHECKED BY:	SR
ISSUE DATE:	3/31/2022
BETA JOB NO.:	6050

SCALE

AS SHOWN

UNLESS OTHERWISE NOTED OR CHANGED BY REPRODUCTION

SHEET NO.

M-4.2

3/31/2022 10:10 AM J:\TAUNTON\WWTF DESIGN\AUTOCAD\PLAN SET\PHASE 2\SECONDARY SETTLING TANKS - PROP. PLANS & SECTIONS.DWG (BETA STD BW.CTB)

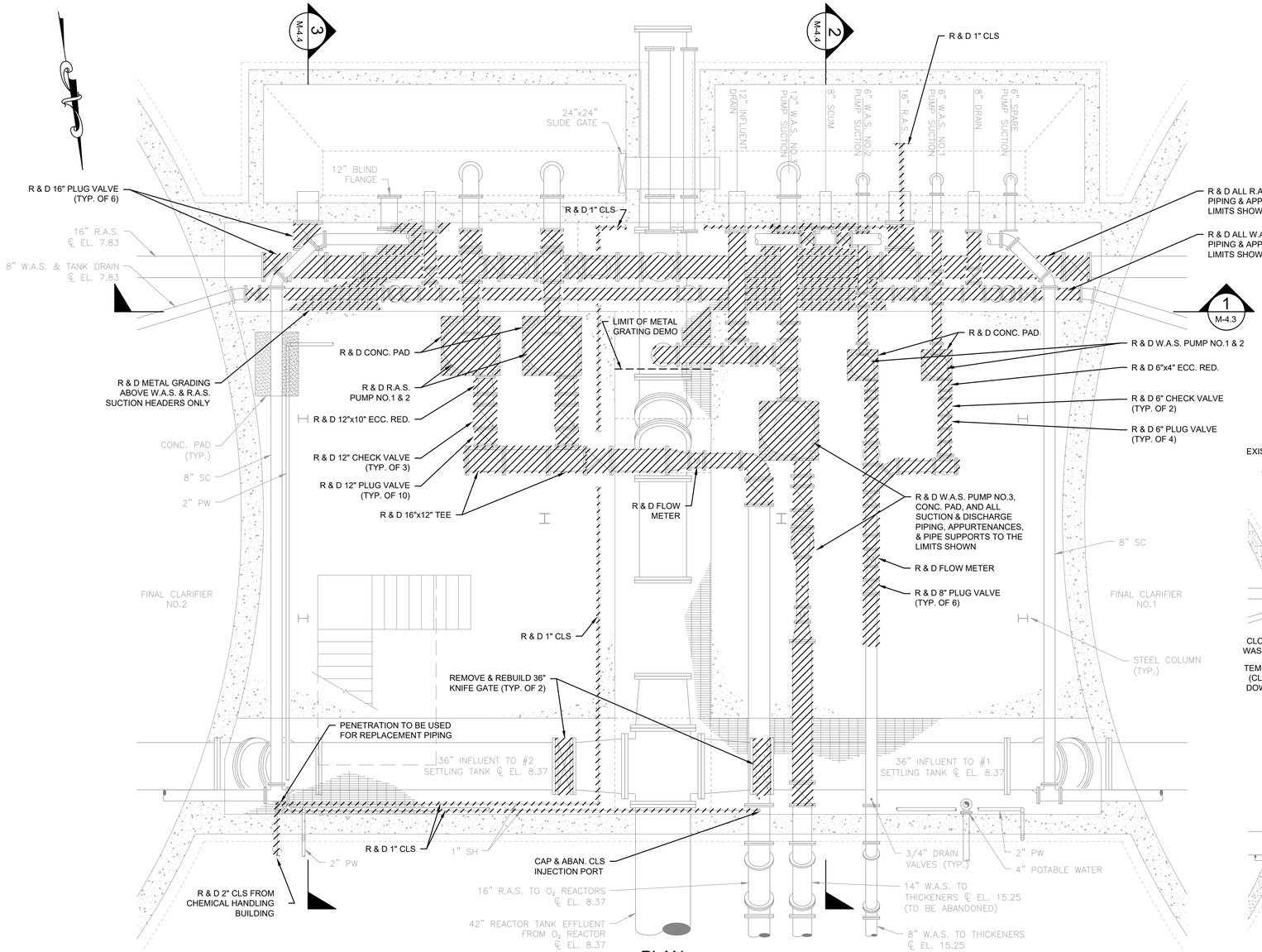

PLAN

SCALE: 1/4"= 1'-0"

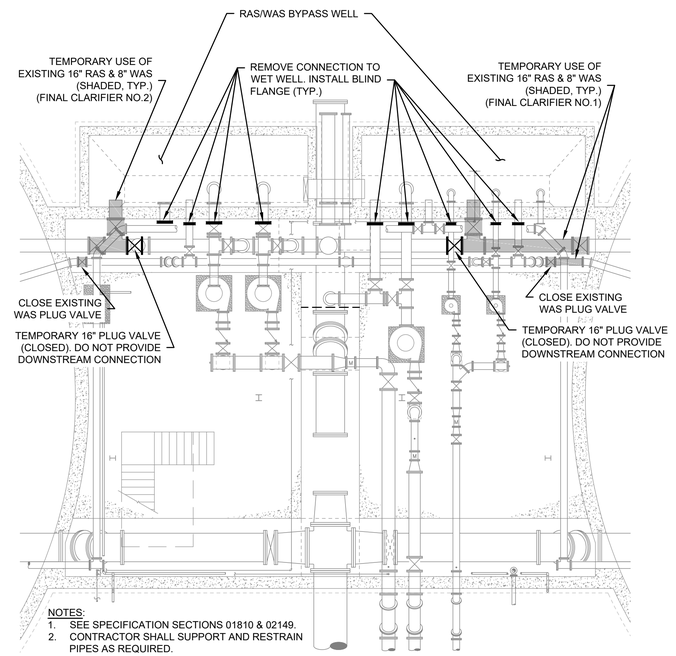

NOTES:
1. SEE SPECIFICATION SECTIONS 01810 & 02149.
2. CONTRACTOR SHALL SUPPORT AND RESTRAIN PIPES AS REQUIRED.

TEMPORARY RAS/WAS BYPASS SYSTEM CONNECTIONS

SCALE: 1/8"= 1'-0"

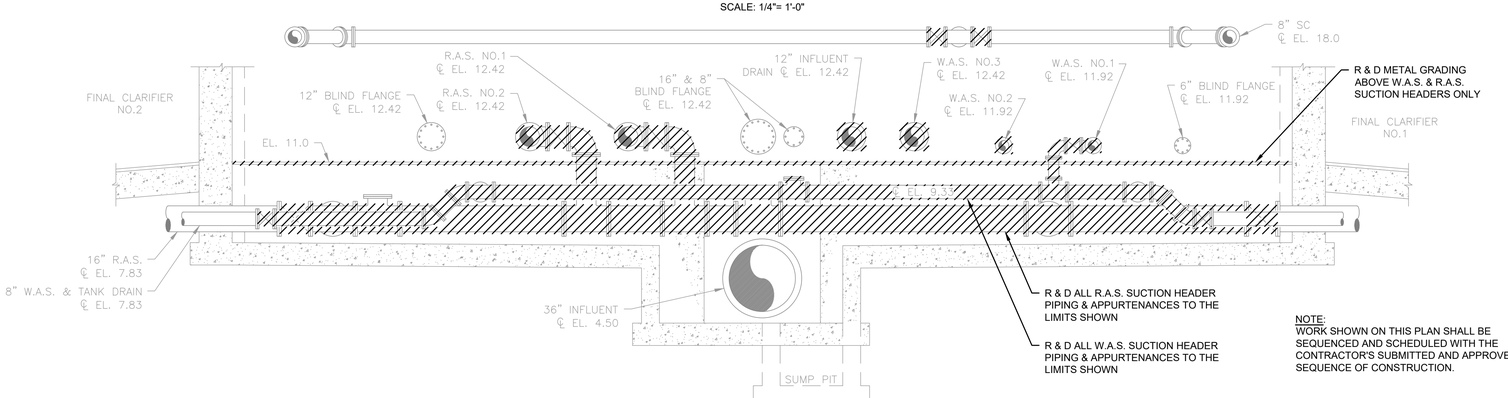

SECTION 1

SCALE: 1/4"= 1'-0" M-4.3

NOTE:
WORK SHOWN ON THIS PLAN SHALL BE SEQUENCED AND SCHEDULED WITH THE CONTRACTOR'S SUBMITTED AND APPROVED SEQUENCE OF CONSTRUCTION.

PREPARED BY

BETA
www.BETA-Inc.com

REGISTERED PROFESSIONAL

COMMONWEALTH OF MASSACHUSETTS
JOSEPH FEDERICO, JR.
No. 30663
REGISTERED PROFESSIONAL ENGINEER

SUBCONSULTANT

PROJECT

Taunton Wastewater Treatment Facility Improvements Phase 2

Taunton, MA

TITLE

Secondary Sludge Pump Station No.1 Demolition Plan & Section

NO.	REVISIONS	DATE

DRAWN BY:	BM
DESIGNED BY:	BM
CHECKED BY:	SR
ISSUE DATE:	3/31/2022
BETA JOB NO.:	6050

SCALE

AS SHOWN

UNLESS OTHERWISE NOTED OR CHANGED BY REPRODUCTION

SHEET NO.

M-4.3

3/31/2022 10:11 AM J:\TAUNTON\WWTF DESIGN\AUTOCAD\PLAN SET\PHASE 2\SECONDARY SETTLING TANKS - EXIST PLANS & SECTIONS.DWG (BETA STD BW.CTB)

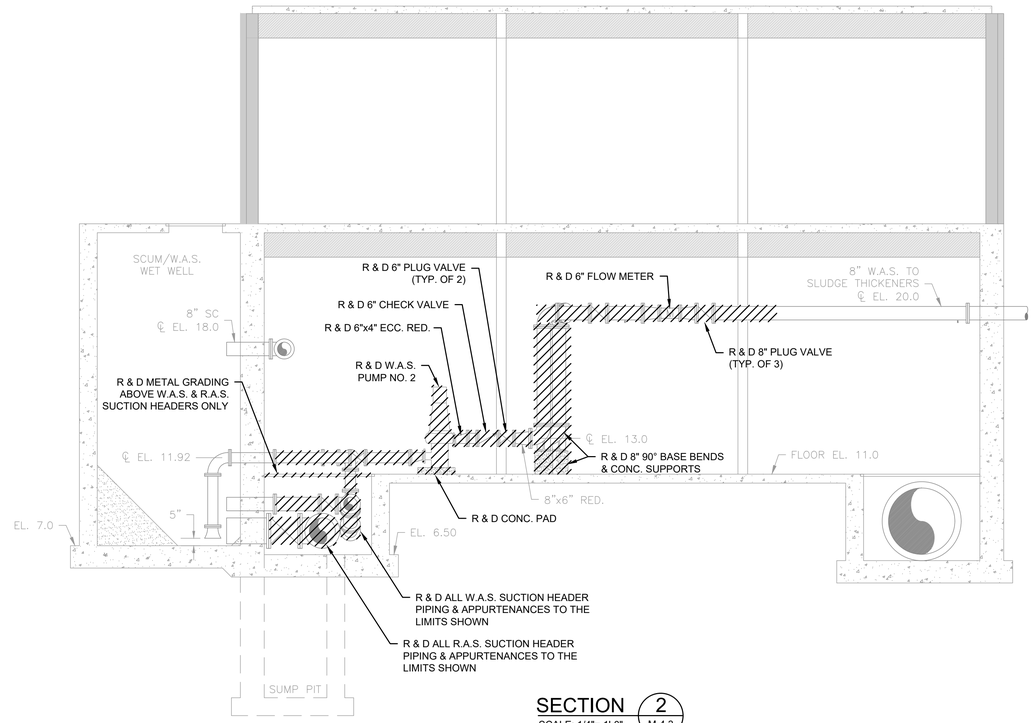

SECTION 2 (M-4.3)
SCALE: 1/4"= 1'-0"

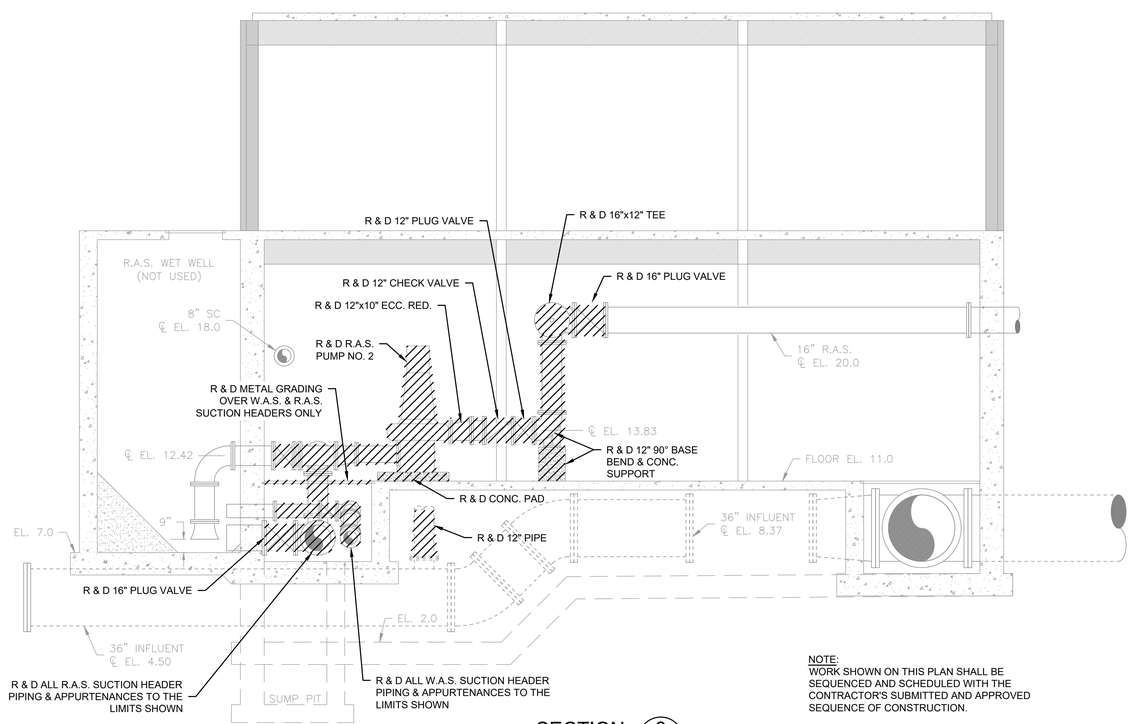

SECTION 3 (M-4.3)
SCALE: 1/4"= 1'-0"

NOTE:
WORK SHOWN ON THIS PLAN SHALL BE SEQUENCED AND SCHEDULED WITH THE CONTRACTOR'S SUBMITTED AND APPROVED SEQUENCE OF CONSTRUCTION.

PREPARED BY

BETA
www.BETA-Inc.com

REGISTERED PROFESSIONAL

COMMONWEALTH OF MASSACHUSETTS
JOSEPH FEDERICO, JR.
No. 30663
REGISTERED PROFESSIONAL ENGINEER

SUBCONSULTANT

PROJECT

Taunton Wastewater Treatment Facility Improvements Phase 2

Taunton, MA

TITLE

Secondary Sludge Pump Station No.1 Demolition Sections

NO.	REVISIONS	DATE

DRAWN BY:	BM
DESIGNED BY:	BM
CHECKED BY:	SR
ISSUE DATE:	3/31/2022
BETA JOB NO.:	6050

SCALE

AS SHOWN

UNLESS OTHERWISE NOTED OR CHANGED BY REPRODUCTION

SHEET NO.

M-4.4

3/31/2022 10:11 AM J:\TAUNTON\WWTF DESIGN\AUTOCAD\PLAN SET\PHASE 2\SECONDARY SETTLING TANKS - EXIST. PLANS & SECTIONS.DWG (BETA STD BW.CTB)

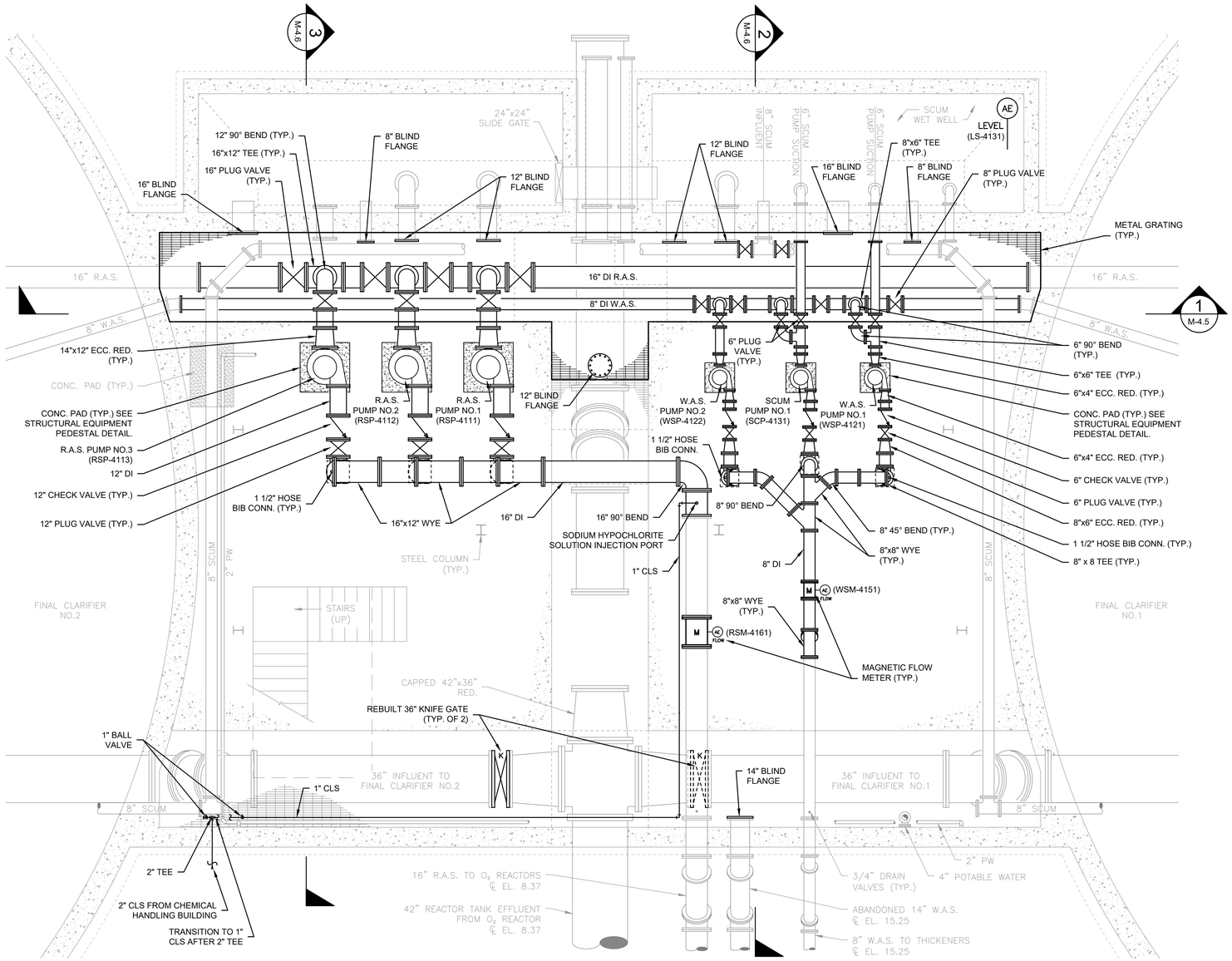

PLAN

SCALE: 1/4"= 1'-0"

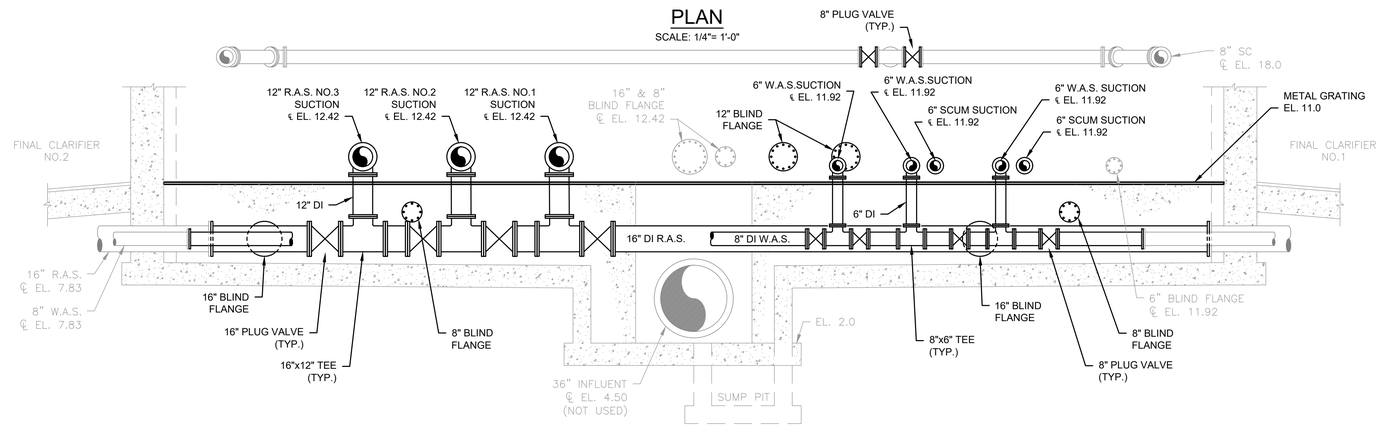

SECTION 1

SCALE: 1/4"= 1'-0"

M-4.5

PREPARED BY

BETA
www.BETA-Inc.com

REGISTERED PROFESSIONAL

COMMONWEALTH OF MASSACHUSETTS
JOSEPH FEDERICO, JR.
No. 30663
REGISTERED PROFESSIONAL ENGINEER

SUBCONSULTANT

PROJECT

Taunton Wastewater Treatment Facility Improvements Phase 2

Taunton, MA

TITLE

Secondary Sludge Pump Station No.1 Plan & Section

NO.	REVISIONS	DATE

DRAWN BY:	BM
DESIGNED BY:	BM
CHECKED BY:	SR
ISSUE DATE:	3/31/2022
BETA JOB NO.:	6050

SCALE

AS SHOWN

UNLESS OTHERWISE NOTED OR CHANGED BY REPRODUCTION

SHEET NO.

M-4.5

3/31/2022 10:11 AM J:\TAUNTON\WWTF DESIGN\AUTOCAD\PLAN SET\PHASE 2\SECONDARY SETTLING TANKS - PROP. PLANS & SECTIONS.DWG (BETA STD BW CTB)

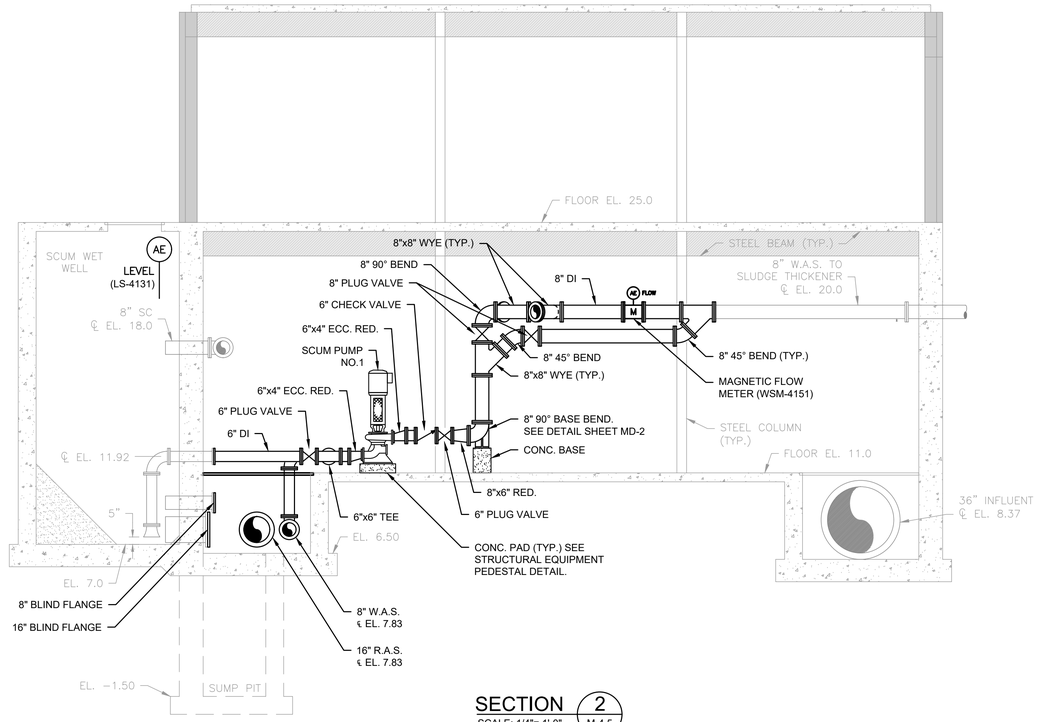

SECTION 2 / M-4.5
SCALE: 1/4"= 1'-0"

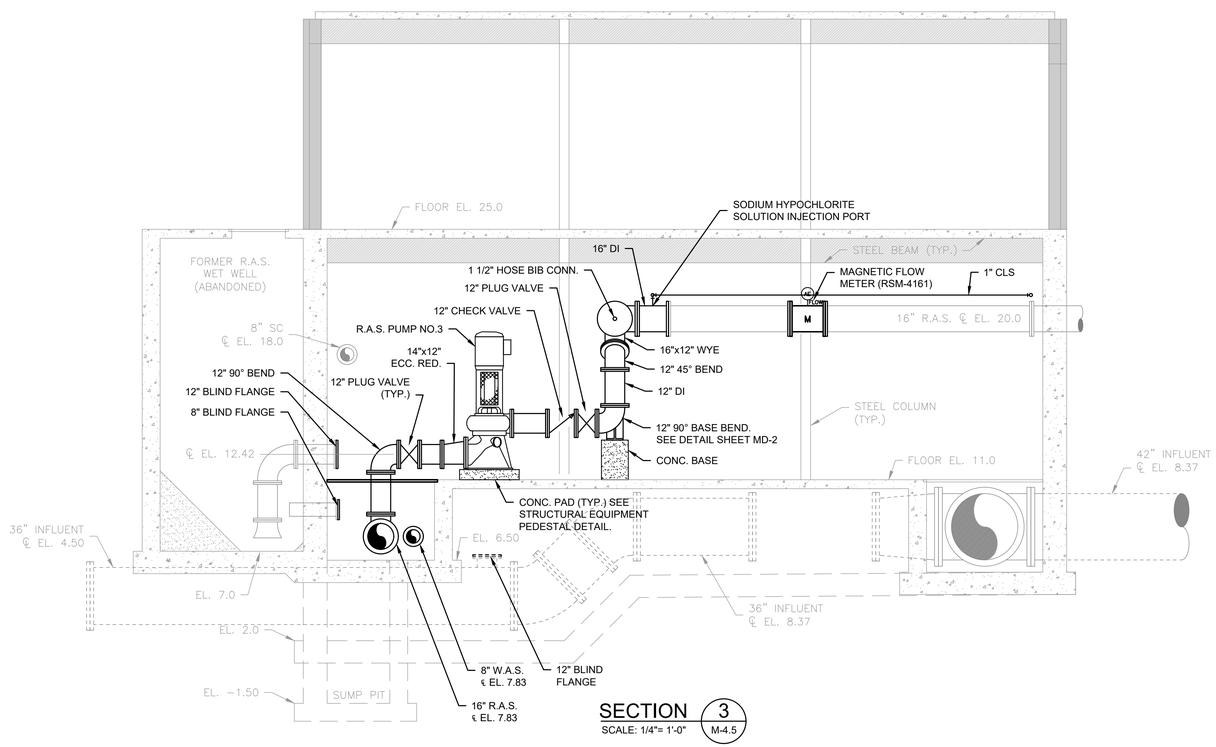

SECTION 3 / M-4.5
SCALE: 1/4"= 1'-0"

PREPARED BY

BETA
www.BETA-Inc.com

REGISTERED PROFESSIONAL

COMMONWEALTH OF MASSACHUSETTS
JOSEPH FEDERICO, JR.
No. 30663
REGISTERED PROFESSIONAL ENGINEER

SUBCONSULTANT

PROJECT

Taunton Wastewater Treatment Facility Improvements Phase 2

Taunton, MA

TITLE

Secondary Sludge Pump Station No.1 Sections

NO.	REVISIONS	DATE

DRAWN BY:	BM
DESIGNED BY:	BM
CHECKED BY:	SR
ISSUE DATE:	3/31/2022
BETA JOB NO.:	6050

SCALE

AS SHOWN

UNLESS OTHERWISE NOTED OR CHANGED BY REPRODUCTION

SHEET NO.

M-4.6

3/31/2022 10:11 AM J:\TAUNTON\WWTF DESIGN\AUTOCAD\PLAN SET\PHASE 2\SECONDARY SETTLING TANKS - PROP. PLANS & SECTIONS.DWG (BETA STD BW.CTB)

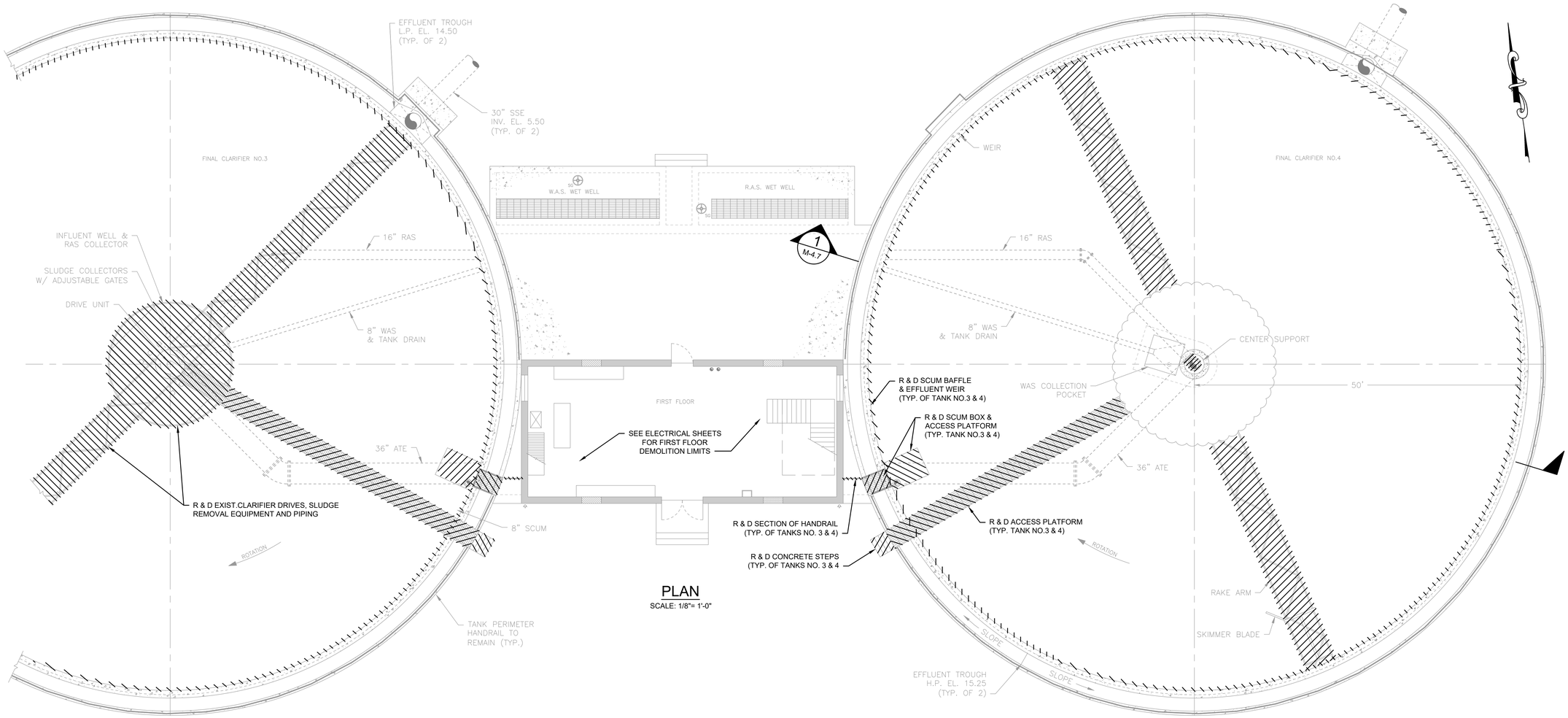

PLAN

SCALE: 1/8"= 1'-0"

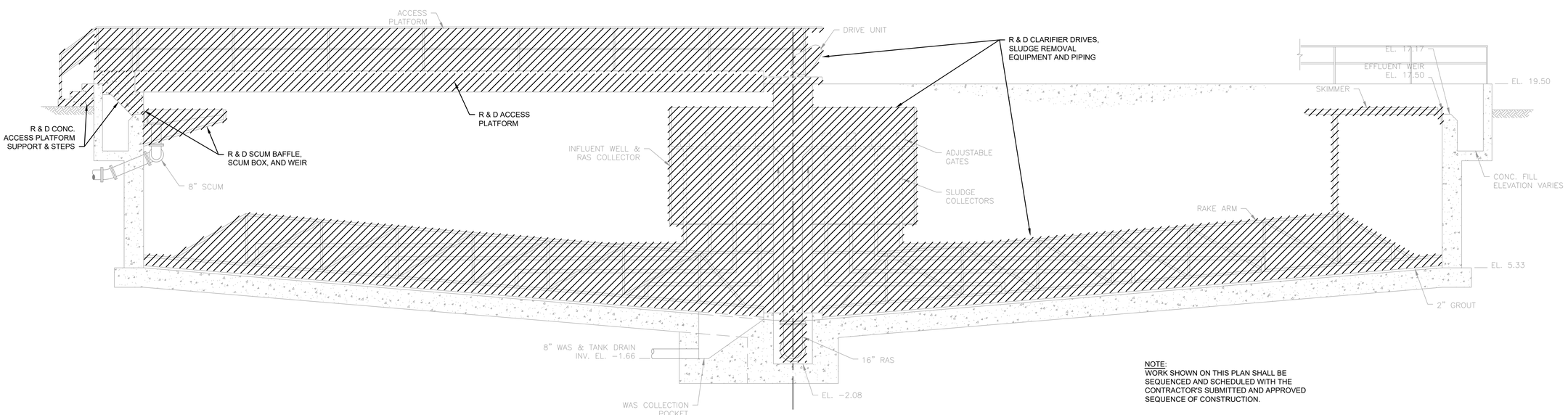

NOTE:
WORK SHOWN ON THIS PLAN SHALL BE SEQUENCED AND SCHEDULED WITH THE CONTRACTOR'S SUBMITTED AND APPROVED SEQUENCE OF CONSTRUCTION.

SECTION 1

SCALE: 1/4"= 1'-0" M-4.7

PREPARED BY

BETA
www.BETA-Inc.com

REGISTERED PROFESSIONAL

COMMONWEALTH OF MASSACHUSETTS
JOSEPH FEDERICO, JR.
No. 30663
REGISTERED PROFESSIONAL ENGINEER

SUBCONSULTANT

PROJECT

Taunton Wastewater Treatment Facility Improvements Phase 2

Taunton, MA

TITLE

Final Clarifiers No.3 & 4 Demolition Plan & Section

NO.	REVISIONS	DATE

DRAWN BY:	BM
DESIGNED BY:	BM
CHECKED BY:	SR
ISSUE DATE:	3/31/2022
BETA JOB NO.:	6050

SCALE

AS SHOWN

UNLESS OTHERWISE NOTED OR CHANGED BY REPRODUCTION

SHEET NO.

M-4.7

3/31/2022 10:12 AM J:\TAUNTON\WWTF DESIGN\AUTOCAD\PLAN SET\PHASE 2\SECONDARY SETTLING TANKS - EXIST. PLANS & SECTIONS.DWG (BETA STD BW.CTB)

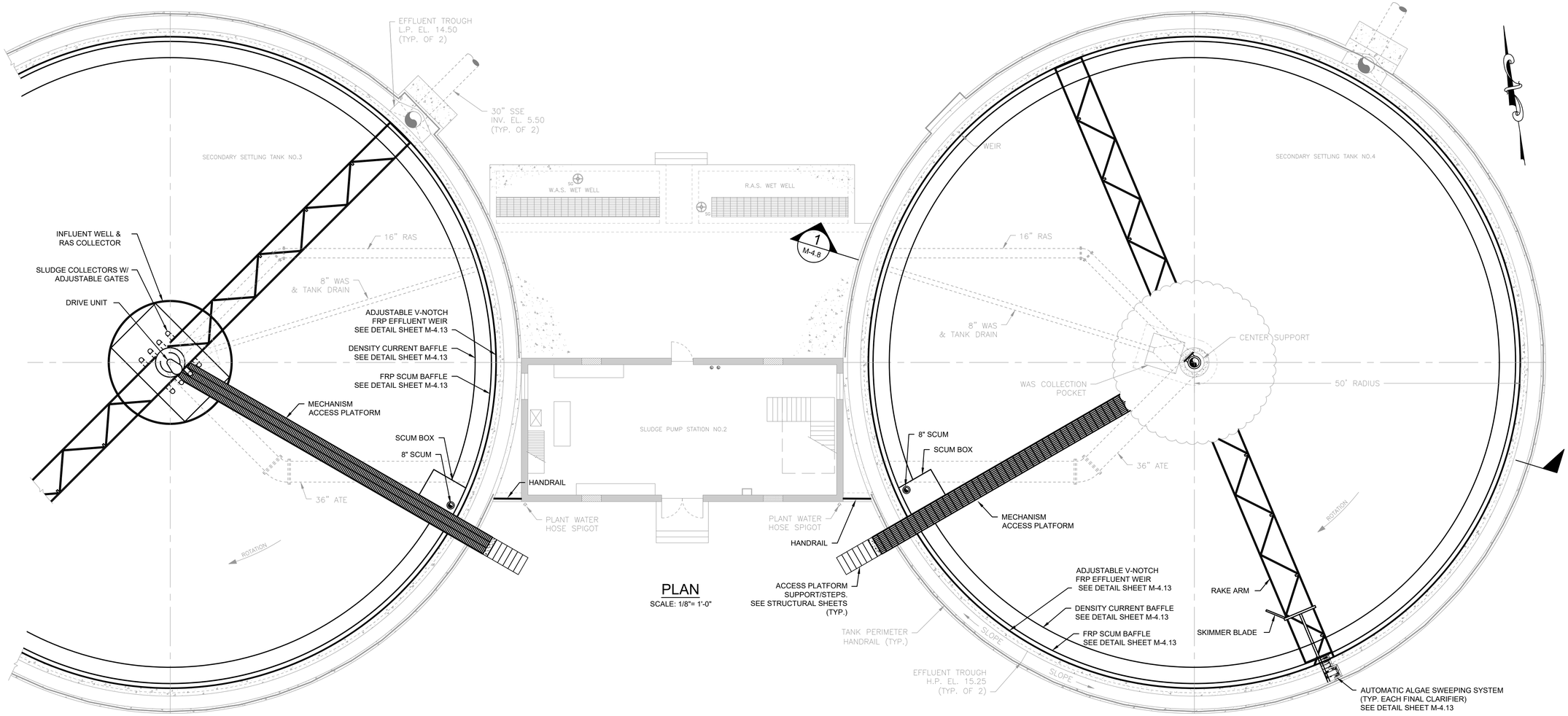

PLAN
SCALE: 1/8"= 1'-0"

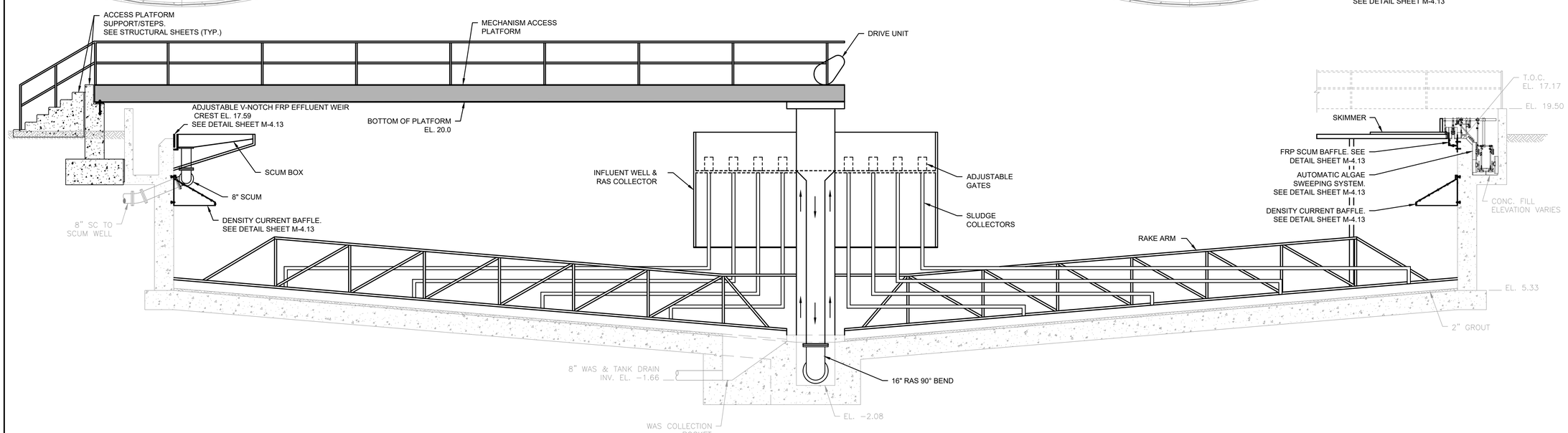

SECTION 1 / M-4.8
SCALE: 1/4"= 1'-0"

PREPARED BY

BETA
www.BETA-Inc.com

REGISTERED PROFESSIONAL

COMMONWEALTH OF MASSACHUSETTS
JOSEPH FEDERICO, JR.
No. 30663
REGISTERED PROFESSIONAL ENGINEER

SUBCONSULTANT

PROJECT

Taunton Wastewater Treatment Facility Improvements Phase 2

Taunton, MA

TITLE

Final Clarifiers No.3 & 4
Plan & Section

NO.	REVISIONS	DATE

DRAWN BY:	BM
DESIGNED BY:	BM
CHECKED BY:	SR
ISSUE DATE:	3/31/2022
BETA JOB NO.:	6050

SCALE

AS SHOWN

UNLESS OTHERWISE NOTED OR CHANGED BY REPRODUCTION

SHEET NO.

M-4.8

3/31/2022 10:12 AM J:\TAUNTON\WWTF DESIGN\AUTOCAD\PLAN SET\PHASE 2\SECONDARY SETTLING TANKS - PROP. PLANS & SECTIONS.DWG (BETA STD BW.CTB)

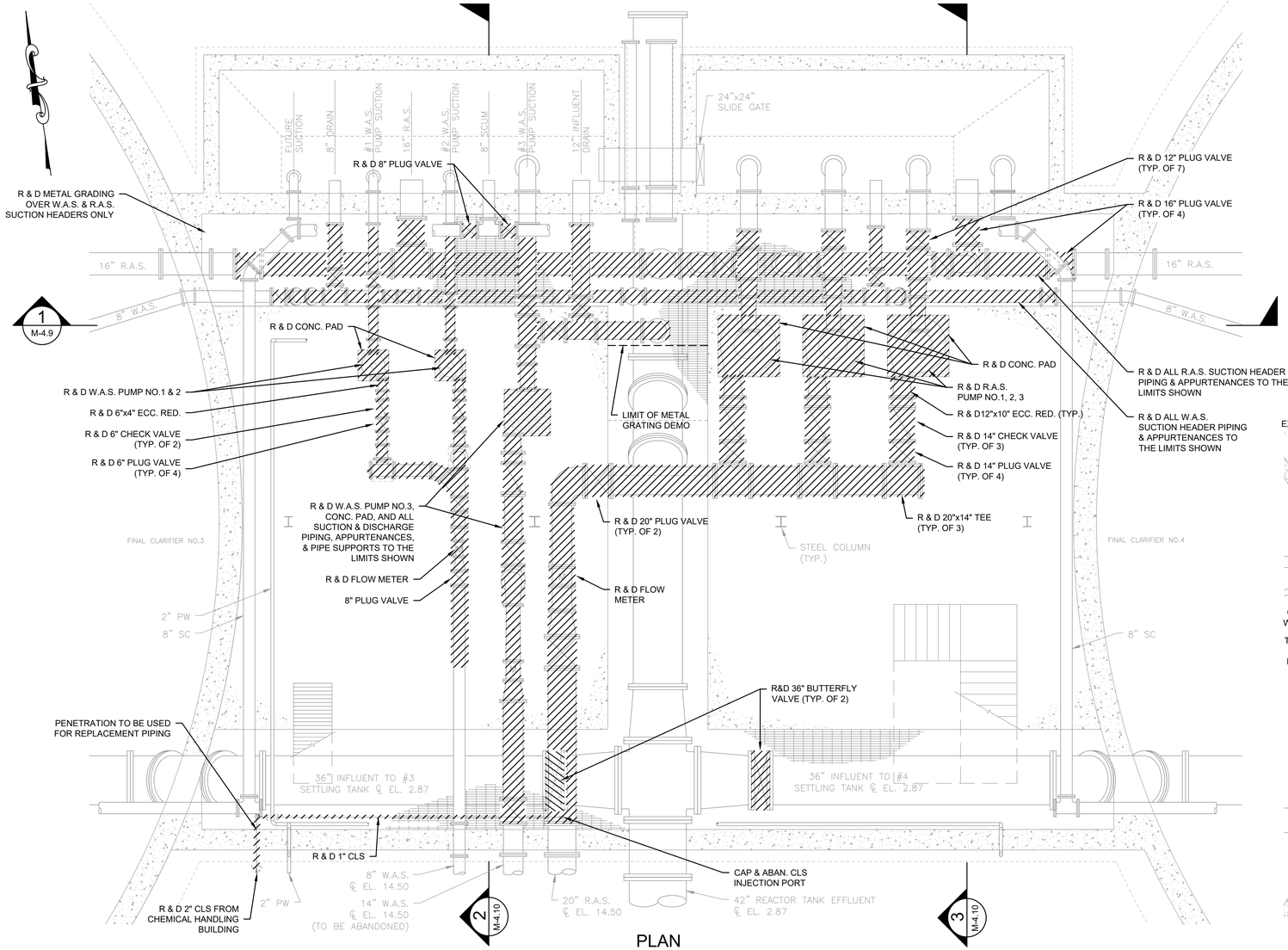

PLAN

SCALE: 1/4"= 1'-0"

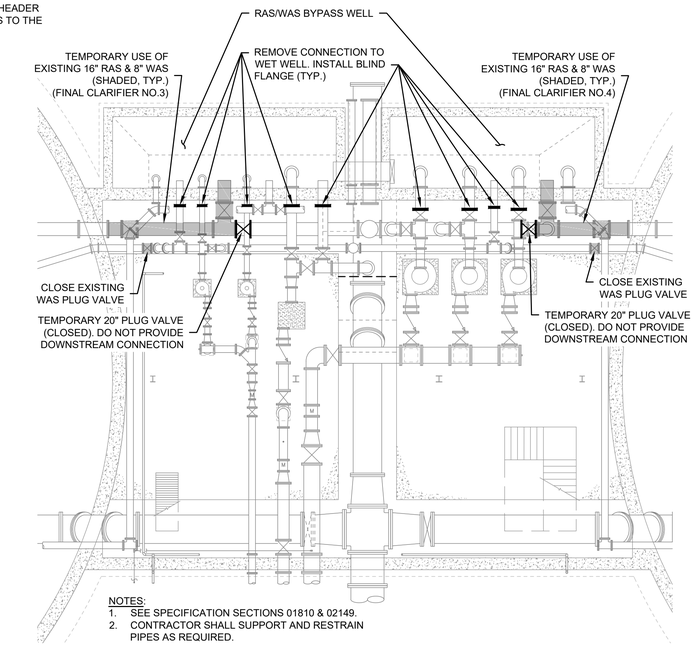

NOTES:
1. SEE SPECIFICATION SECTIONS 01810 & 02149.
2. CONTRACTOR SHALL SUPPORT AND RESTRAIN PIPES AS REQUIRED.

TEMPORARY RAS/WAS BYPASS SYSTEM CONNECTIONS

SCALE: 1/8"= 1'-0"

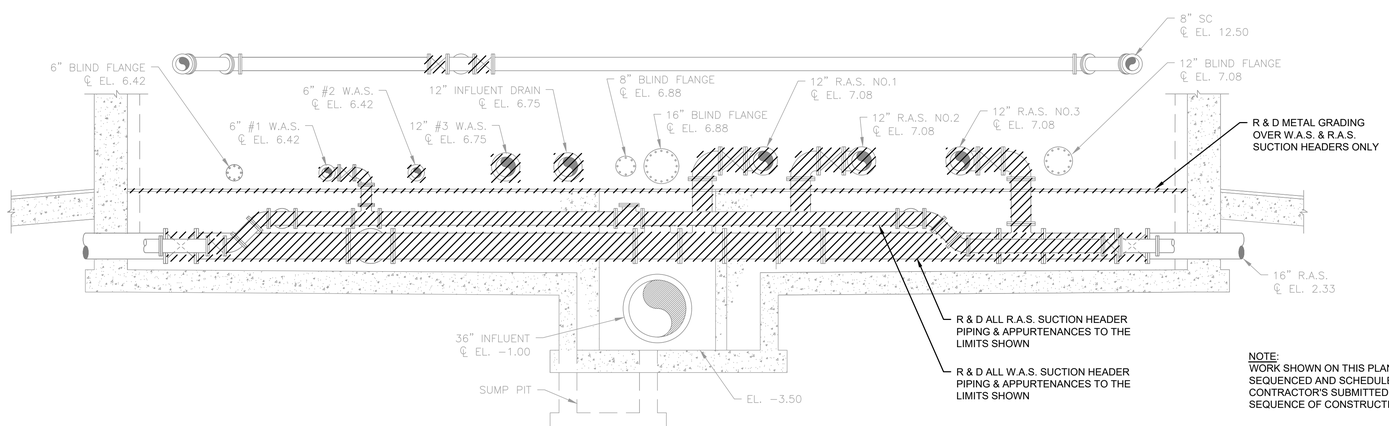

SECTION 1 M-4.9

SCALE: 1/4"= 1'-0"

NOTE:
WORK SHOWN ON THIS PLAN SHALL BE SEQUENCED AND SCHEDULED WITH THE CONTRACTOR'S SUBMITTED AND APPROVED SEQUENCE OF CONSTRUCTION.

PREPARED BY

BETA
www.BETA-Inc.com

REGISTERED PROFESSIONAL

COMMONWEALTH OF MASSACHUSETTS
JOSEPH FEDERICO, JR.
No. 30663
REGISTERED PROFESSIONAL ENGINEER

SUBCONSULTANT

PROJECT

Taunton Wastewater Treatment Facility Improvements Phase 2

Taunton, MA

TITLE

Secondary Sludge Pump Station No.2 Demolition Plan & Section

NO.	REVISIONS	DATE

DRAWN BY:	BM
DESIGNED BY:	BM
CHECKED BY:	SR
ISSUE DATE:	3/31/2022
BETA JOB NO.:	6050

SCALE

AS SHOWN

UNLESS OTHERWISE NOTED OR CHANGED BY REPRODUCTION

SHEET NO.

M-4.9

3/31/2022 10:12 AM J:\TAUNTON\WWTF DESIGN\AUTOCAD\PLAN SET\PHASE 2\SECONDARY SETTLING TANKS - EXIST. PLANS & SECTIONS.DWG (BETA STD BW CTB)

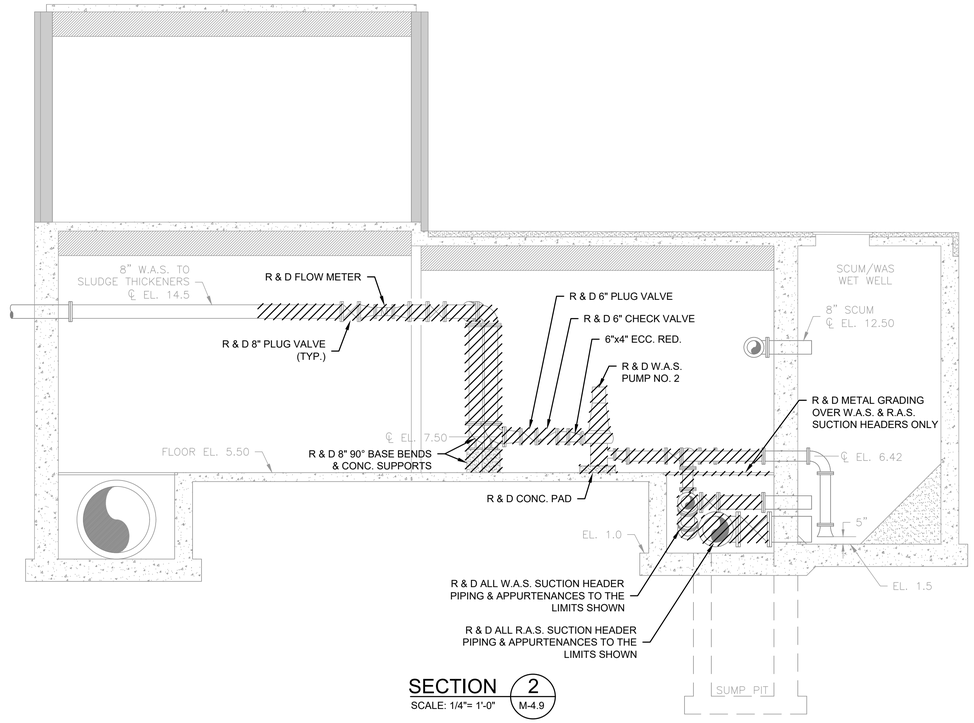

SECTION 2 (M-4.9)
SCALE: 1/4"= 1'-0"

NOTE:
WORK SHOWN ON THIS PLAN SHALL BE SEQUENCED AND SCHEDULED WITH THE CONTRACTOR'S SUBMITTED AND APPROVED SEQUENCE OF CONSTRUCTION.

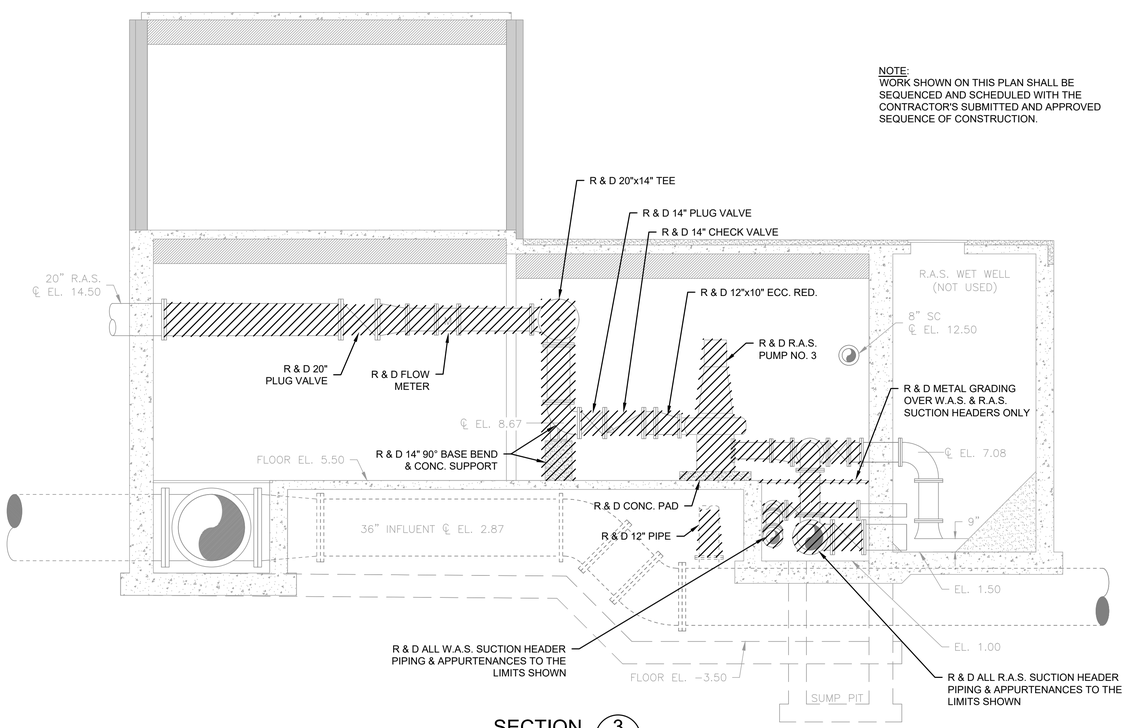

SECTION 3 (M-4.9)
SCALE: 1/4"= 1'-0"

PREPARED BY

BETA
www.BETA-Inc.com

REGISTERED PROFESSIONAL

COMMONWEALTH OF MASSACHUSETTS
JOSEPH FEDERICO, JR.
No. 30663
REGISTERED PROFESSIONAL ENGINEER

SUBCONSULTANT

PROJECT

Taunton Wastewater Treatment Facility Improvements Phase 2

Taunton, MA

TITLE

Secondary Sludge Pump Station No.2 Demolition Sections

NO.	REVISIONS	DATE

DRAWN BY:	BM
DESIGNED BY:	BM
CHECKED BY:	SR
ISSUE DATE:	3/31/2022
BETA JOB NO.:	6050

SCALE

AS SHOWN

UNLESS OTHERWISE NOTED OR CHANGED BY REPRODUCTION

SHEET NO.

M-4.10

3/31/2022 10:12 AM J:\TAUNTONWWTF DESIGN\AUTOCAD\PLAN SET\PHASE 2\SECONDARY SETTLING TANKS - EXIST. PLANS & SECTIONS.DWG (BETA STD BW.CTB)

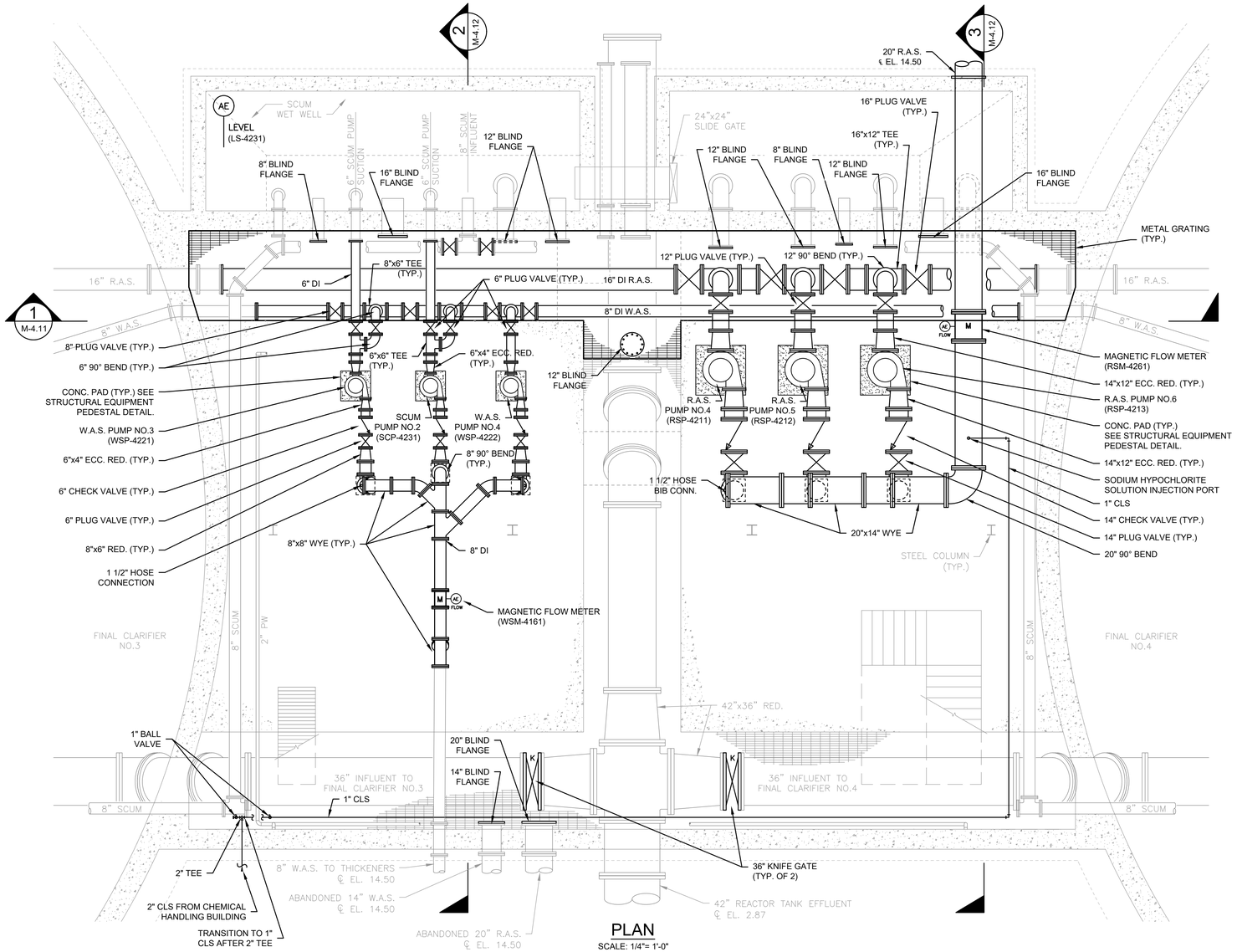

PLAN

SCALE: 1/4"= 1'-0"

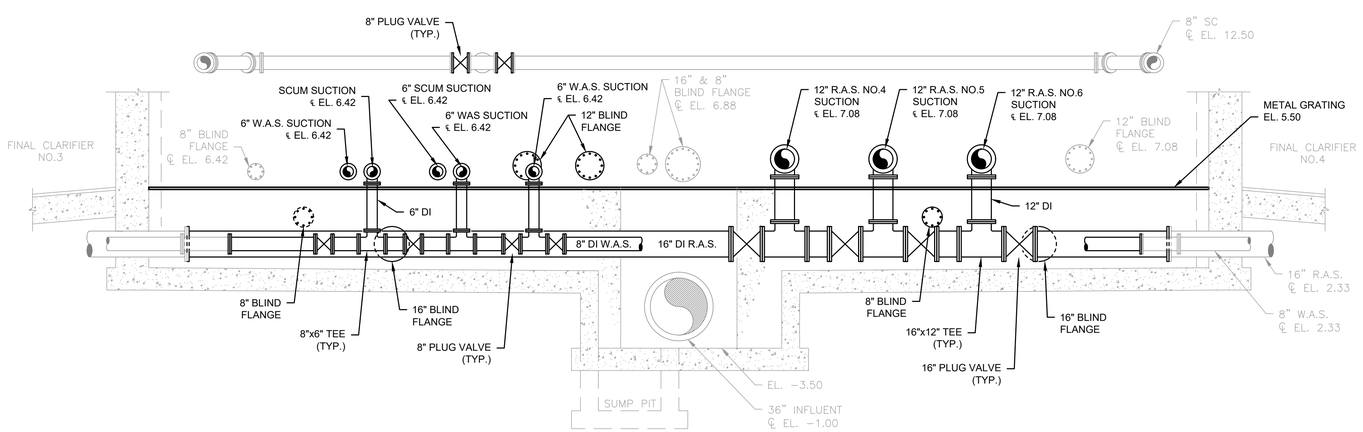

SECTION 1 M-4.11

SCALE: 1/4"= 1'-0"

PREPARED BY

BETA
www.BETA-Inc.com

REGISTERED PROFESSIONAL

COMMONWEALTH OF MASSACHUSETTS
JOSEPH FEDERICO, JR.
No. 30663
REGISTERED PROFESSIONAL ENGINEER

SUBCONSULTANT

PROJECT

Taunton Wastewater Treatment Facility Improvements Phase 2

Taunton, MA

TITLE

Secondary Sludge Pump Station No.2 Plan & Section

NO.	REVISIONS	DATE

DRAWN BY:	BM
DESIGNED BY:	BM
CHECKED BY:	SR
ISSUE DATE:	3/31/2022
BETA JOB NO.:	6050

SCALE

AS SHOWN

UNLESS OTHERWISE NOTED OR CHANGED BY REPRODUCTION

SHEET NO.

M-4.11

3/31/2022 10:13 AM J:\TAUNTON\WWTF DESIGN\AUTOCAD\PLAN SET\PHASE 2\SECONDARY SETTLING TANKS - PROP. PLANS & SECTIONS.DWG (BETA STD BW.CTB)

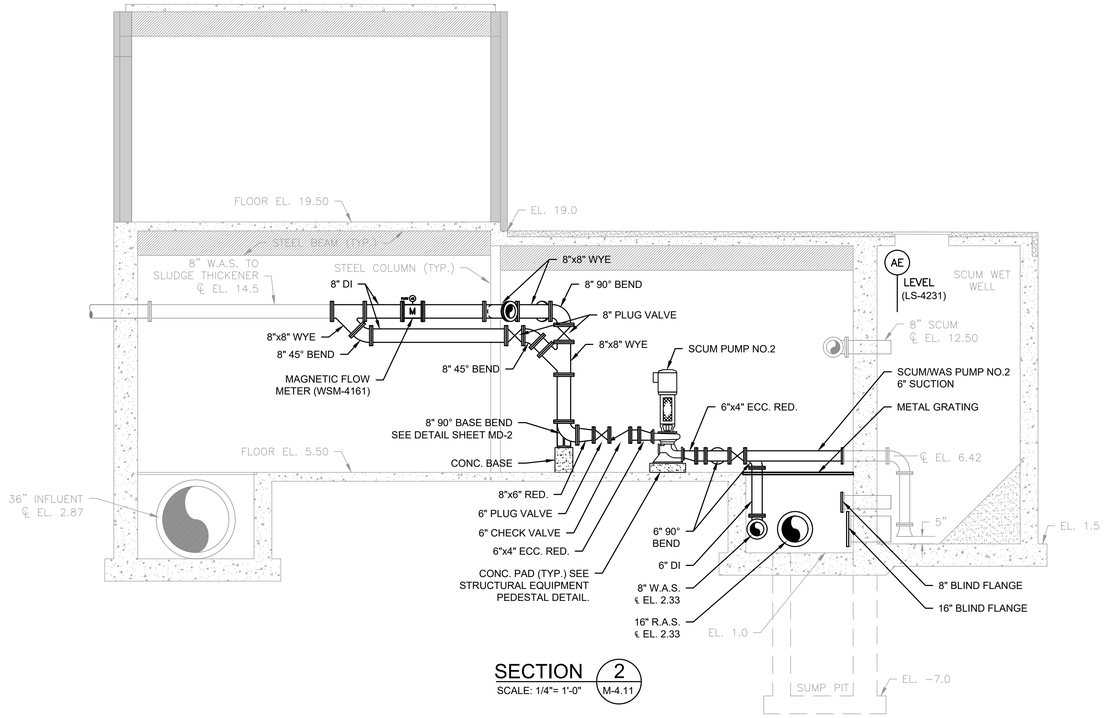

SECTION 2 (M-4.11)
SCALE: 1/4"= 1'-0"

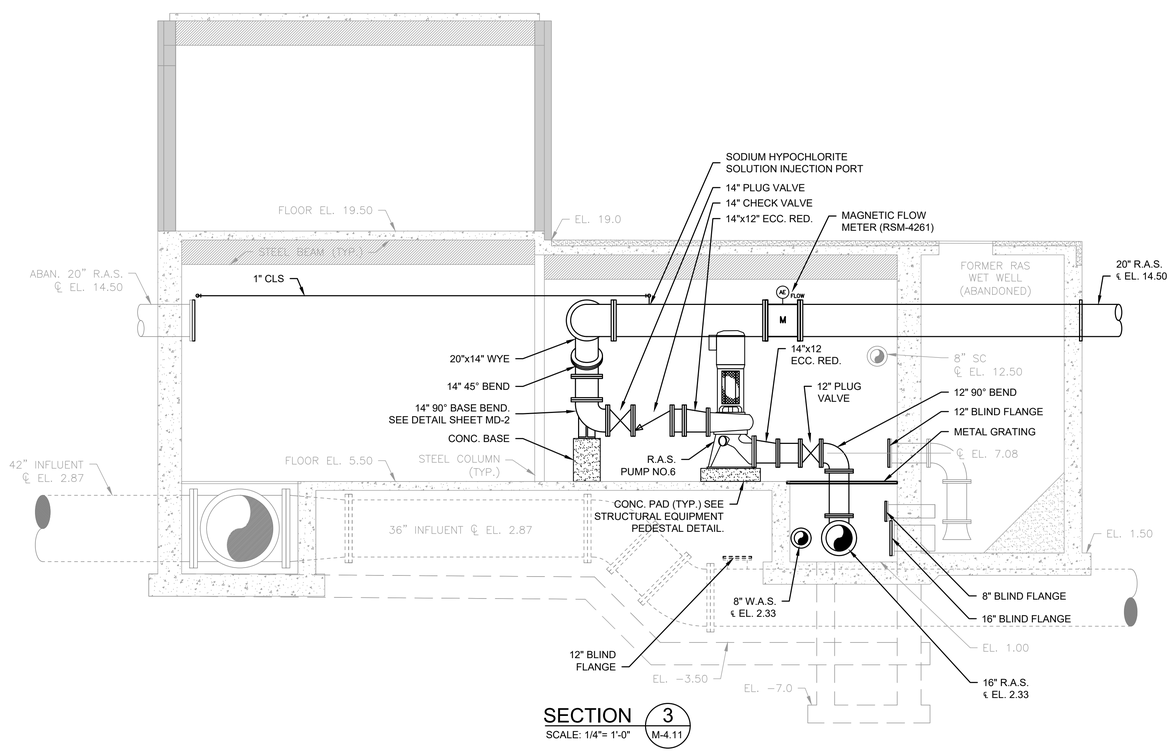

SECTION 3 (M-4.11)
SCALE: 1/4"= 1'-0"

PREPARED BY

BETA
www.BETA-Inc.com

REGISTERED PROFESSIONAL

COMMONWEALTH OF MASSACHUSETTS
JOSEPH FEDERICO, JR.
No. 30663
REGISTERED PROFESSIONAL ENGINEER

SUBCONSULTANT

PROJECT

Taunton Wastewater Treatment Facility Improvements Phase 2

Taunton, MA

TITLE

Secondary Sludge Pump Station No.2 Sections

NO.	REVISIONS	DATE

DRAWN BY:	BM
DESIGNED BY:	BM
CHECKED BY:	SR
ISSUE DATE:	3/31/2022
BETA JOB NO.:	6050

SCALE

AS SHOWN

UNLESS OTHERWISE NOTED OR CHANGED BY REPRODUCTION

SHEET NO.

M-4.12

3/31/2022 10:13 AM J:\TAUNTONWWTF DESIGN\AUTOCAD\PLAN SET\PHASE 2\SECONDARY SETTLING TANKS - PROP. PLANS & SECTIONS.DWG (BETA STD BW.CTB)

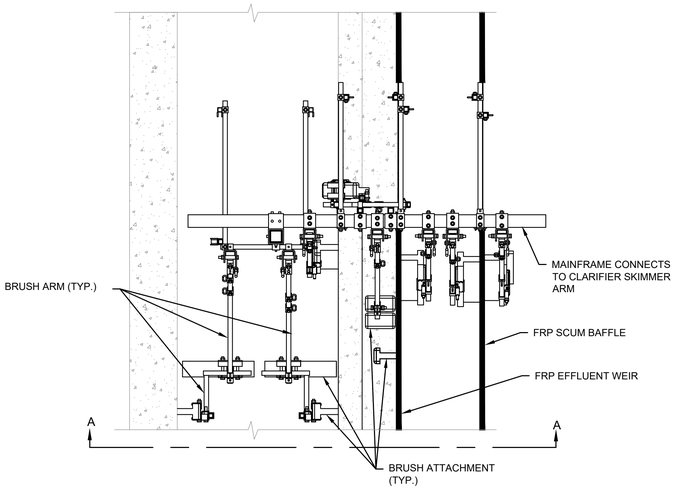

PLAN

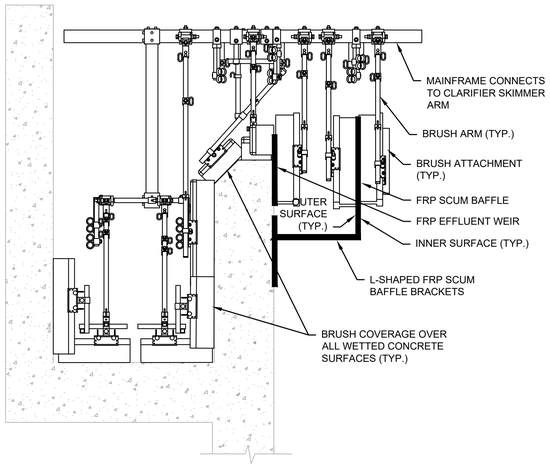

SECTION A-A

NOTE:
1. REFER TO SPECIFICATION SECTION 11100.

AUTOMATIC ALGAE SWEEPING SYSTEM

SCALE: NOT TO SCALE

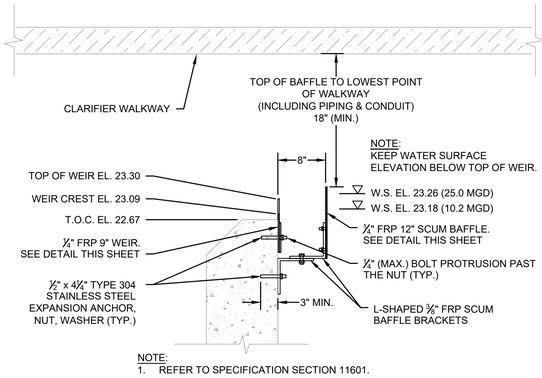

NOTE:
1. REFER TO SPECIFICATION SECTION 11601.

FINAL CLARIFIER NO. 1 & 2 EFFLUENT WEIR & BAFFLE

SCALE: NOT TO SCALE

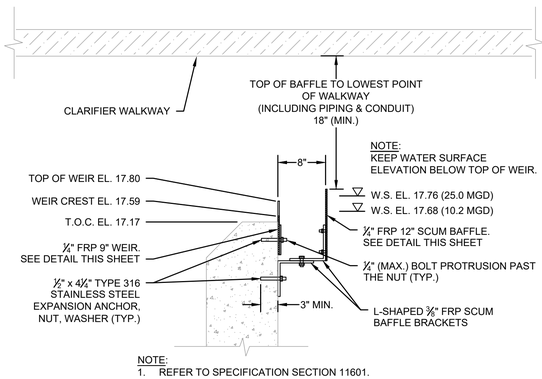

NOTE:
1. REFER TO SPECIFICATION SECTION 11601.

FINAL CLARIFIER NO. 3 & 4 EFFLUENT WEIR & BAFFLE

SCALE: NOT TO SCALE

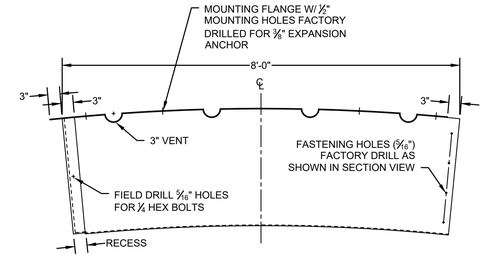

PLAN

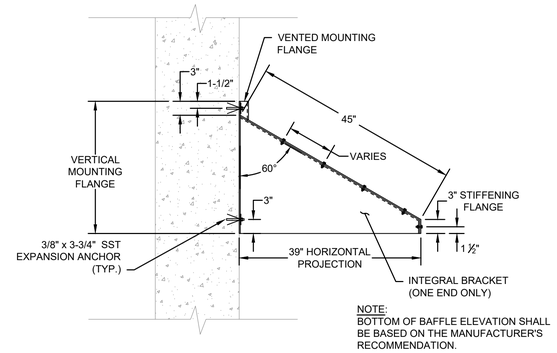

SECTION

NOTE:
1. REFER TO SPECIFICATION SECTION 11329.

DENSITY CURRENT BAFFLE

SCALE: NOT TO SCALE

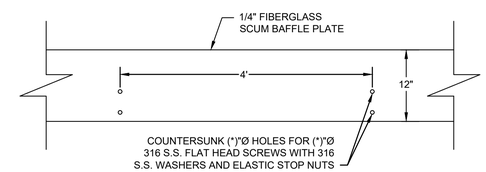

NOTES:
1. (*) INDICATES DIMENSION AS RECOMMENDED BY BAFFLE MANUFACTURER (TYP.)
2. REFER TO SPECIFICATION SECTION 11601.

TYPICAL ADJUSTABLE SCUM BAFFLE

SCALE: NOT TO SCALE

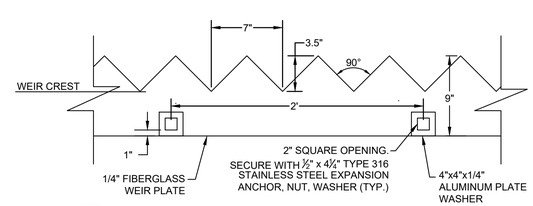

NOTE:
1. REFER TO SPECIFICATION SECTION 11601.

TYPICAL ADJUSTABLE V-NOTCH WEIR

SCALE: NOT TO SCALE

PREPARED BY

BETA
www.BETA-Inc.com

REGISTERED PROFESSIONAL

COMMONWEALTH OF MASSACHUSETTS
JOSEPH FEDERICO, JR.
No. 30663
REGISTERED PROFESSIONAL ENGINEER

SUBCONSULTANT

PROJECT

Taunton Wastewater Treatment Facility Improvements Phase 2

Taunton, MA

TITLE

Final Clarifier Details

NO.	REVISIONS	DATE

DRAWN BY:	BM
DESIGNED BY:	BM
CHECKED BY:	SR
ISSUE DATE:	3/31/2022
BETA JOB NO.:	6050

SCALE

AS SHOWN

UNLESS OTHERWISE NOTED OR CHANGED BY REPRODUCTION

SHEET NO.

M-4.13

3/31/2022 10:13 AM J:\TAUNTON\WWTF DESIGN\AUTOCAD\PLAN SET\PHASE 2\SECONDARY SETTLING TANKS - PROP. PLANS & SECTIONS.DWG (BETA STD BW CTB)

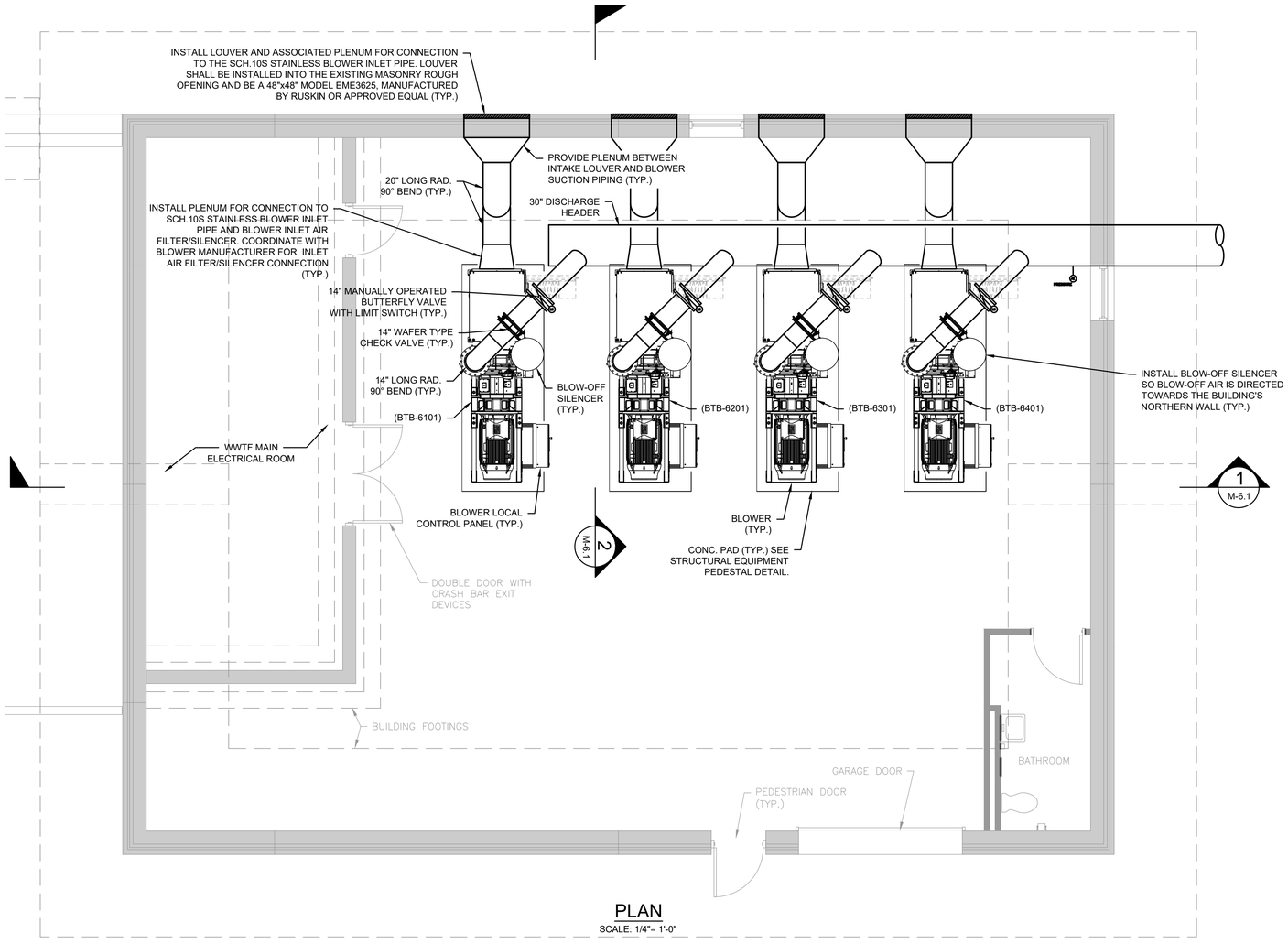

PLAN
SCALE: 1/4"= 1'-0"

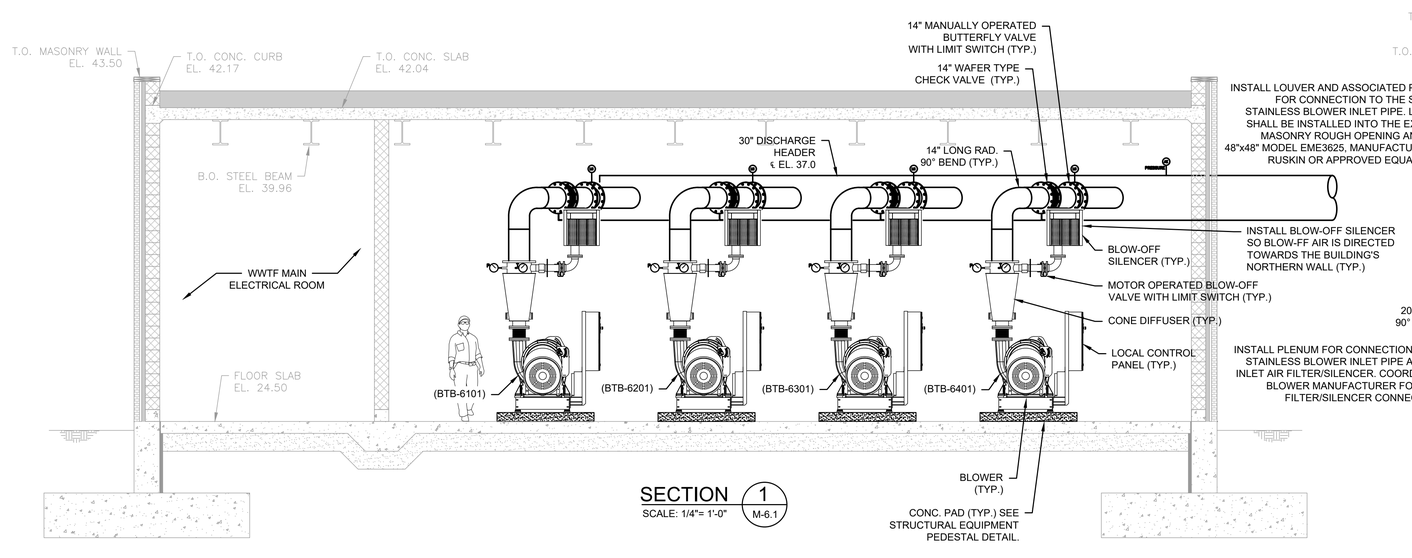

SECTION 1 M-6.1
SCALE: 1/4"= 1'-0"

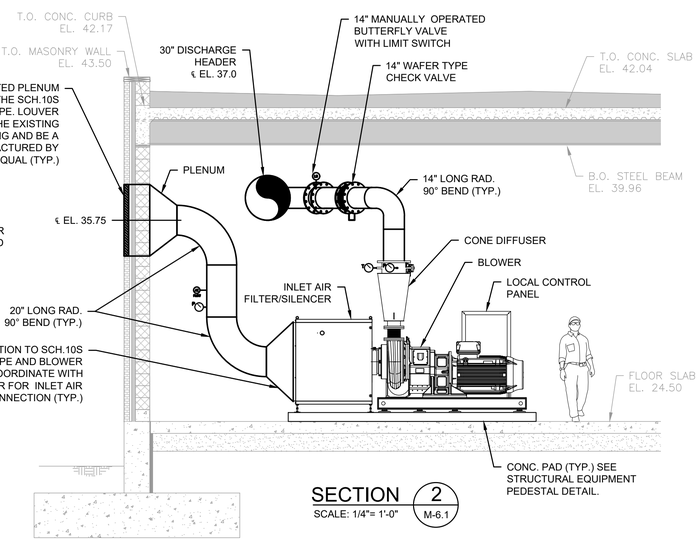

SECTION 2 M-6.1
SCALE: 1/4"= 1'-0"

PREPARED BY

BETA
www.BETA-Inc.com

REGISTERED PROFESSIONAL

COMMONWEALTH OF MASSACHUSETTS
JOSEPH FEDERICO, JR.
No. 30850
REGISTERED PROFESSIONAL ENGINEER

SUBCONSULTANT

PROJECT

Taunton Wastewater Treatment Facility Improvements Phase 2

Taunton, MA

TITLE

Blower Building Plans & Sections

NO.	REVISIONS	DATE

DRAWN BY:	BM
DESIGNED BY:	BM
CHECKED BY:	SR
ISSUE DATE:	3/31/2022
BETA JOB NO.:	6050

SCALE

AS SHOWN

UNLESS OTHERWISE NOTED OR CHANGED BY REPRODUCTION

SHEET NO.

M-6.1

3/31/2022 10:13 AM J:\TAUNTON\WWTF DESIGN\AUTOCAD\PLAN SET\PHASE 2\BLOWER BUILDING - PROP. PLANS & SECTIONS.DWG (BETA STB BW.STB)

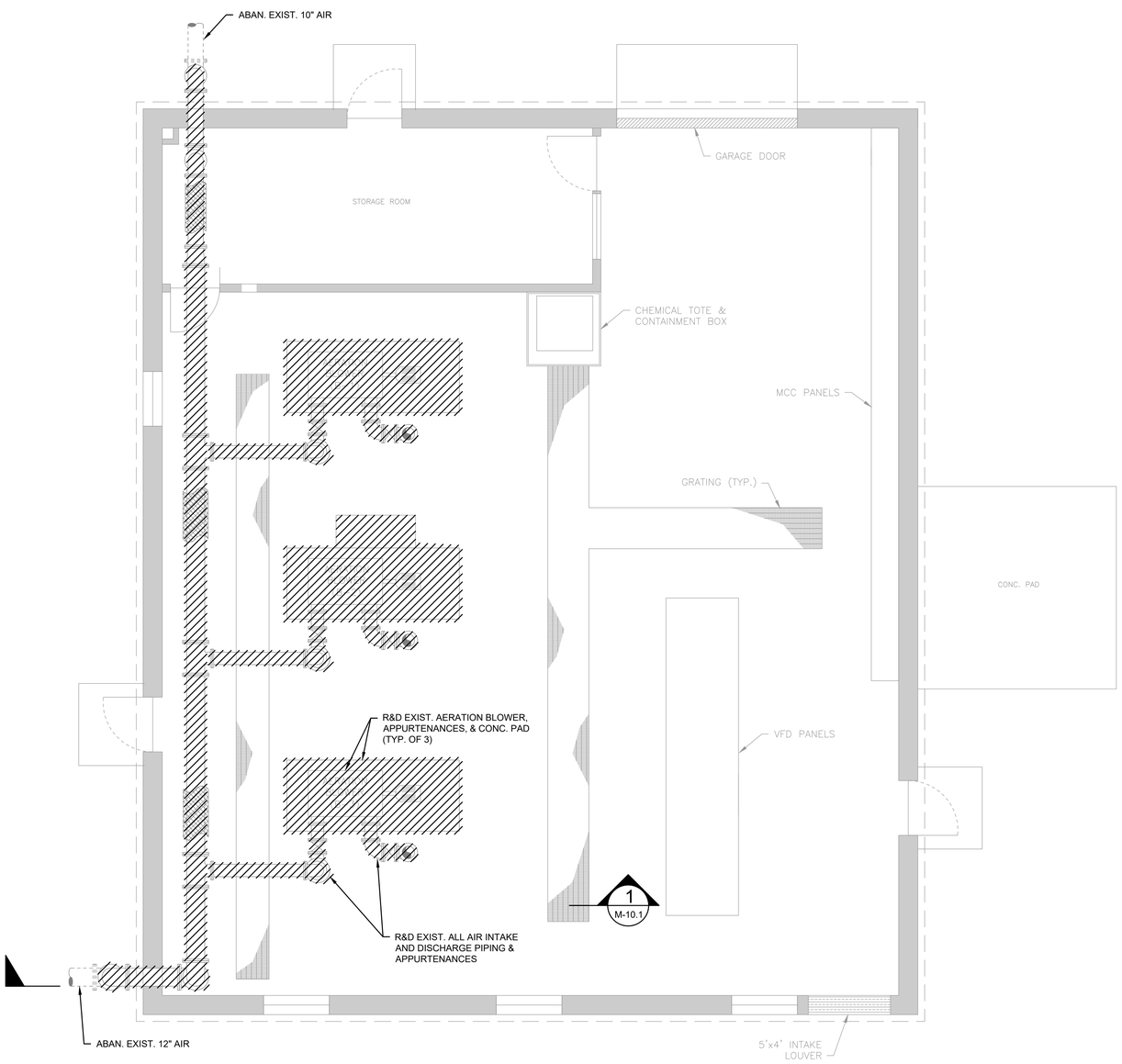

PLAN (EL. 36.0)

SCALE: 1/4"= 1'-0"

NOTE:
WORK SHOWN ON THIS PLAN SHALL BE SEQUENCED AND SCHEDULED WITH THE CONTRACTOR'S SUBMITTED AND APPROVED SEQUENCE OF CONSTRUCTION.

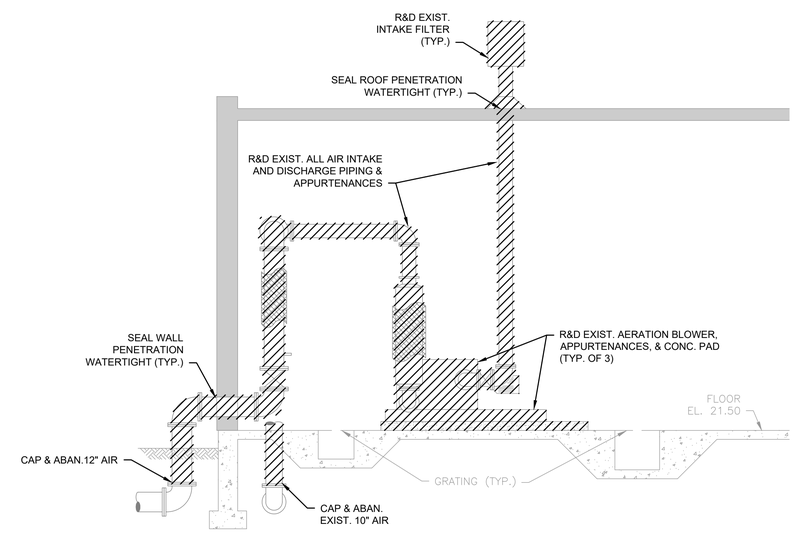

SECTION 1 M-10.1

SCALE: 1/4"= 1'-0"

PREPARED BY

BETA
www.BETA-Inc.com

REGISTERED PROFESSIONAL

COMMONWEALTH OF MASSACHUSETTS
JOSEPH FEDERICO, JR.
No. 30663
REGISTERED PROFESSIONAL ENGINEER

SUBCONSULTANT

PROJECT

Taunton Wastewater Treatment Facility Improvements Phase 2

Taunton, MA

TITLE

Existing Blower Building Demolition Plan & Section

NO.	REVISIONS	DATE

DRAWN BY:	BM
DESIGNED BY:	BM
CHECKED BY:	SR
ISSUE DATE:	3/31/2022
BETA JOB NO.:	6050

SCALE

AS SHOWN

UNLESS OTHERWISE NOTED OR CHANGED BY REPRODUCTION

SHEET NO.

M-9.1

3/31/2022 10:13 AM J:\TAUNTON\WWTF DESIGN\AUTOCAD\PLAN SET\PHASE 2\BLOWER BUILDING - EXIST. PLANS & SECTIONS.DWG (BETA STD BW.CTB)

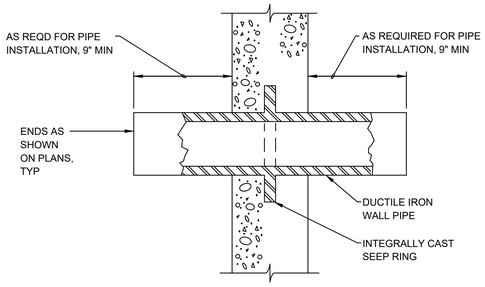

PExPE DUCTILE IRON WALL PIPE (401)

SCALE: NOT TO SCALE

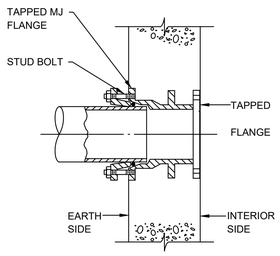

MJxFLUSH FLG D.I. WALL PIPE (402)

SCALE: NOT TO SCALE

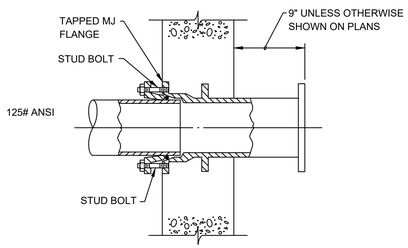

MJxFLG D.I. WALL PIPE (403)

SCALE: NOT TO SCALE

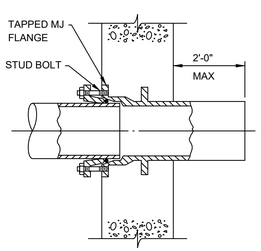

MJxPE D.I. WALL PIPE (404)

SCALE: NOT TO SCALE

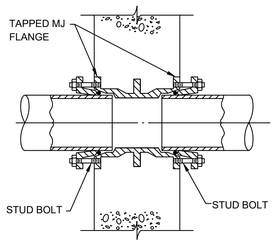

MJxMJ D.I. WALL PIPE (405)

SCALE: NOT TO SCALE

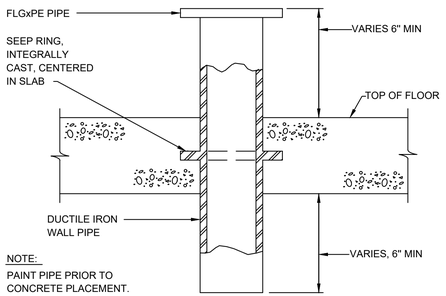

FLGxPE FLOOR PIPE (406)

SCALE: NOT TO SCALE

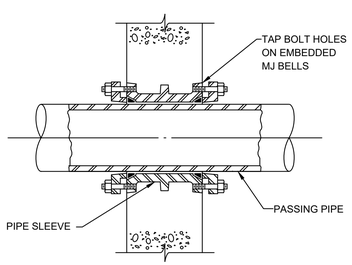

MJxMJ PIPE SLEEVE (407)

SCALE: NOT TO SCALE

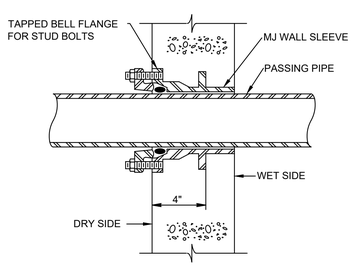

MJxPE WALL SLEEVE (408)

SCALE: NOT TO SCALE

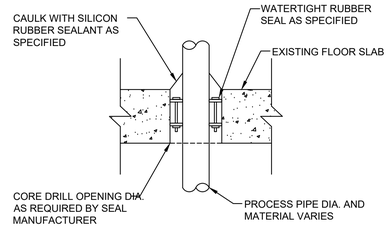

FLOOR PENETRATION FOR CORED HOLES IN WET AREAS (409)

SCALE: NOT TO SCALE

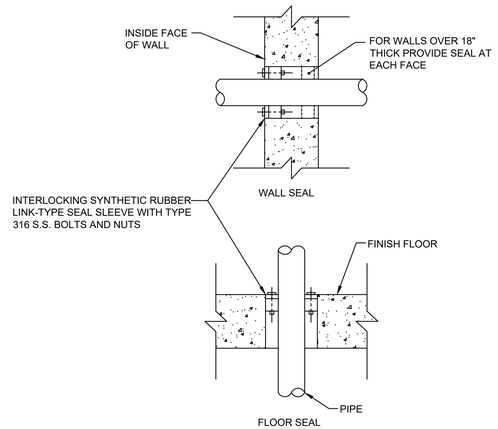

PENETRATION FOR CORED HOLES IN EXISTING WALLS OR FLOOR PENETRATIONS IN DRY AREAS (410)

SCALE: NOT TO SCALE

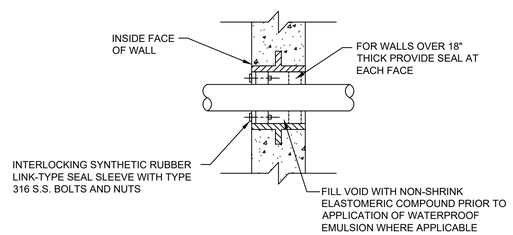

WALL SLEEVE/NEW CONCRETE (411)

SCALE: NOT TO SCALE

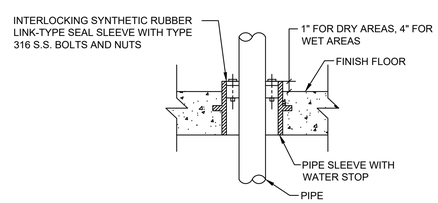

NOTE: FOR FLOOR SLEEVES, WHERE GASTIGHT OR WATERTIGHT SEALS ARE NOT REQUIRED, THE SEAL MAY BE OMITTED

FLOOR SLEEVE/NEW CONCRETE (412)

SCALE: NOT TO SCALE

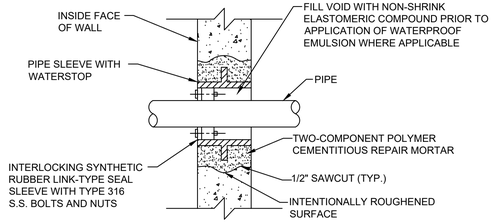

WALL SLEEVE/EXISTING WALL (413)

SCALE: NOT TO SCALE

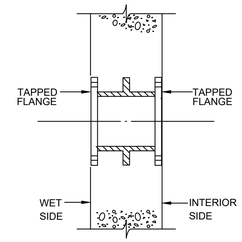

FLUSH FLGxFLUSH FLG D.I. WALL PIPE (414)

SCALE: NOT TO SCALE

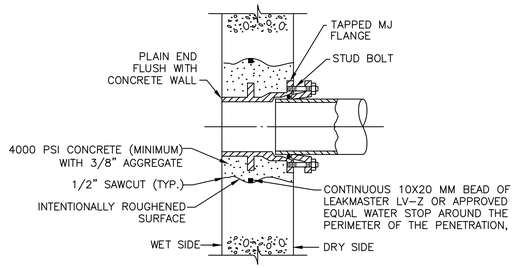

EXPANSION OF CORED HOLES/EXISTING WALLS (415)

SCALE: NOT TO SCALE

PREPARED BY

BETA
www.BETA-Inc.com

REGISTERED PROFESSIONAL

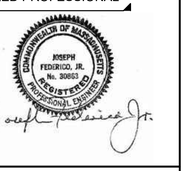

SUBCONSULTANT

PROJECT

Taunton Wastewater Treatment Facility Improvements Phase 2

Taunton, MA

TITLE

Mechanical Details I

NO.	REVISIONS	DATE

DRAWN BY:	BM
DESIGNED BY:	BM
CHECKED BY:	SR
ISSUE DATE:	3/31/2022
BETA JOB NO.:	6050

SCALE

AS SHOWN

UNLESS OTHERWISE NOTED OR CHANGED BY REPRODUCTION

SHEET NO.

MD-1

3/31/2022 10:13 AM J:\TAUNTON\WWTF DESIGN\AUTOCAD\PLAN SET\PHASE 2\MECHANICAL DETAILS.DWG (BETA STD BW.CTB)

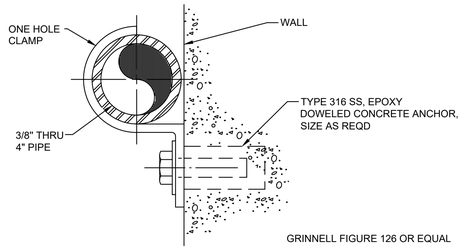

PIPE SUPPORT 416
SCALE: NOT TO SCALE

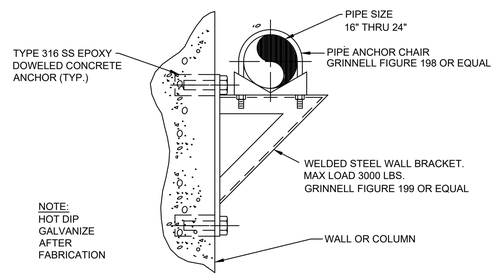

PIPE SUPPORT–HEAVY 420
SCALE: NOT TO SCALE

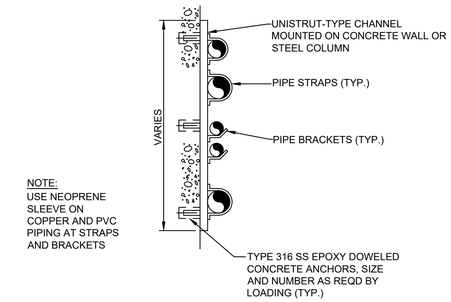

STACKED PIPE WALL SYSTEM 424
SCALE: NOT TO SCALE

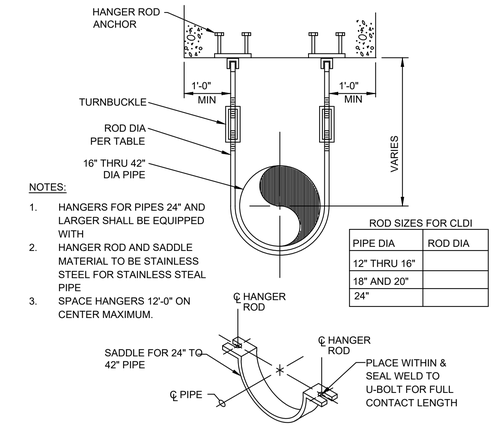

NOTES:
1. HANGERS FOR PIPES 24" AND LARGER SHALL BE EQUIPPED WITH
2. HANGER ROD AND SADDLE MATERIAL TO BE STAINLESS STEEL FOR STAINLESS STEAL PIPE
3. SPACE HANGERS 12'-0" ON CENTER MAXIMUM.

ROD SIZES FOR CLDI

PIPE DIA	ROD DIA
12" THRU 16"	
18" AND 20"	
24"	

PIPE HANGER 428
SCALE: NOT TO SCALE

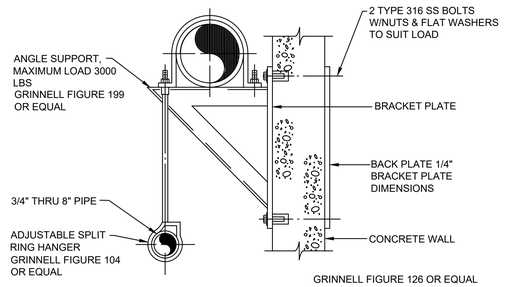

PIPE SUPPORT 417
SCALE: NOT TO SCALE

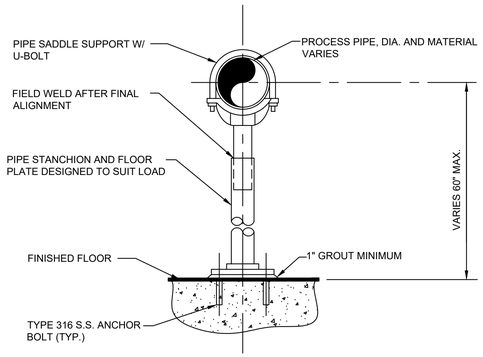

NOTES: 1. PROVIDE HALF-ROUND RIGID INSULATION WAND INSULATION SHIELD FOR INSULATED PIPING.

2. PROVIDE NEOPRENE ISOLATION PAD UNDER SUPPORT FOOT FOR ISOLATED PIPING OR WHEN SUPPORT IS ADJACENT TO MECHANICAL EQUIPMENT.

GRINNELL FIGURE 259 OR EQUAL

FLOOR PIPE SUPPORT 421
SCALE: NOT TO SCALE

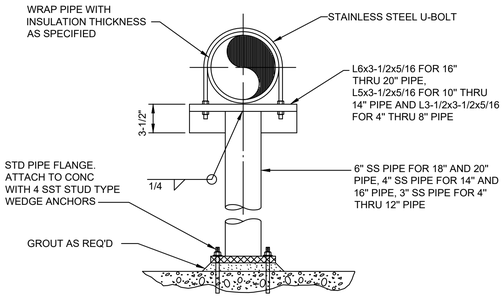

S.S. PIPE SUPPORT (SUBMERGED) 425
SCALE: NOT TO SCALE

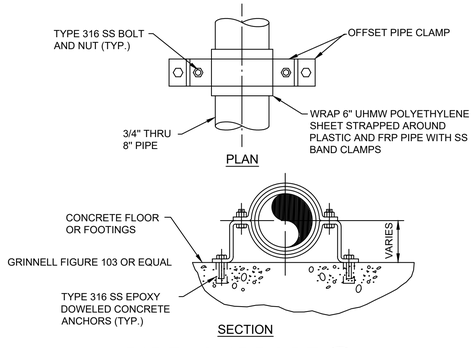

PIPE SUPPORT 429
SCALE: NOT TO SCALE

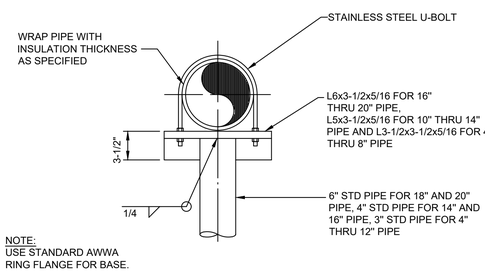

PIPE SUPPORT 418
SCALE: NOT TO SCALE

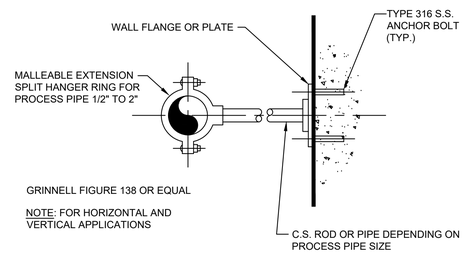

WALL PIPE SUPPORT 422
SCALE: NOT TO SCALE

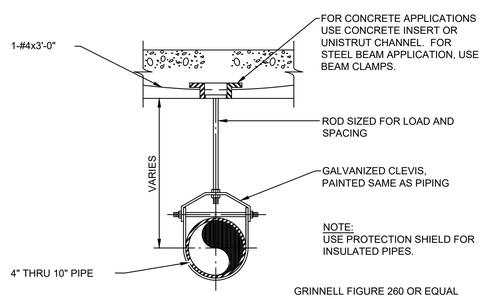

PIPE HANGER 426
SCALE: NOT TO SCALE

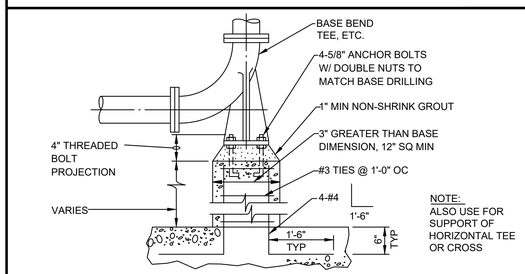

BASE BEND 430
SCALE: NOT TO SCALE

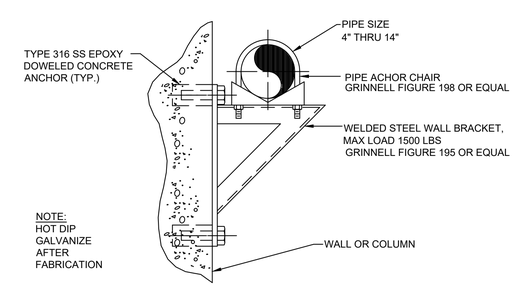

PIPE SUPPORT–MEDIUM 419
SCALE: NOT TO SCALE

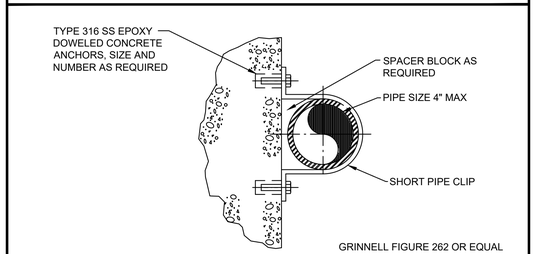

VERTICAL PIPE SUPPORT 423
SCALE: NOT TO SCALE

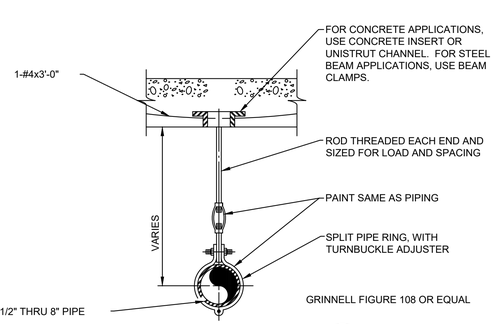

PIPE HANGER 427
SCALE: NOT TO SCALE

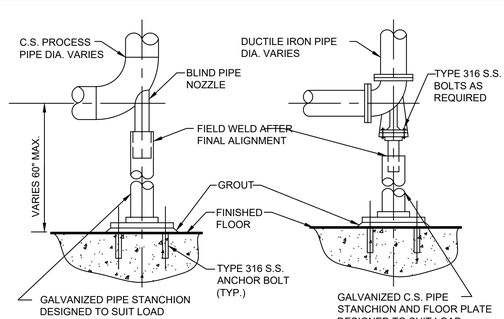

FLOOR PIPE SADDLE 431
SCALE: NOT TO SCALE

PREPARED BY

BETA
www.BETA-Inc.com

REGISTERED PROFESSIONAL

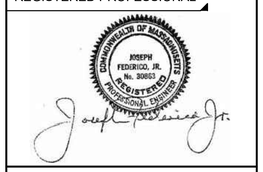

SUBCONSULTANT

PROJECT

Taunton Wastewater Treatment Facility Improvements Phase 2

Taunton, MA

TITLE

Mechanical Details II

NO.	REVISIONS	DATE

DRAWN BY:	BM
DESIGNED BY:	BM
CHECKED BY:	SR
ISSUE DATE:	3/31/2022
BETA JOB NO.:	6050

SCALE

AS SHOWN

UNLESS OTHERWISE NOTED OR CHANGED BY REPRODUCTION

SHEET NO.

MD-2

3/31/2022 10:13 AM J:\TAUNTON\WWTF DESIGN\AUTOCAD\PLAN SET\PHASE 2\MECHANICAL DETAILS.DWG (BETA STD BW.CTB)

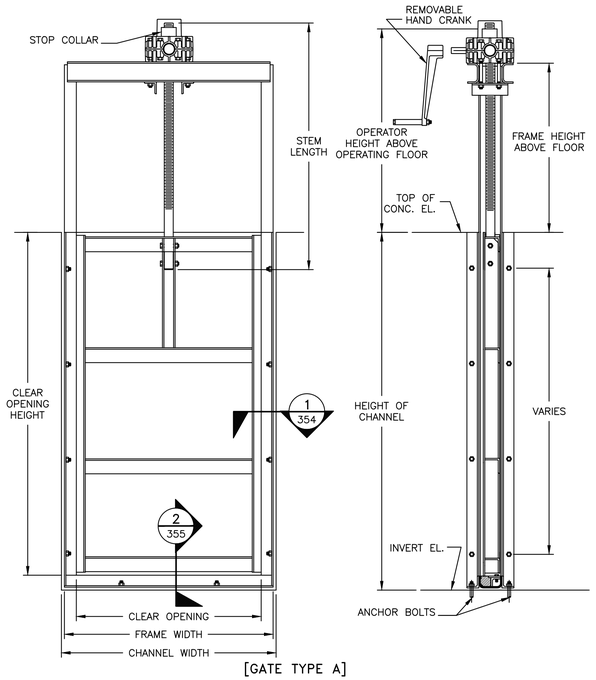

[GATE TYPE A]

STAINLESS STEEL SLUICE GATE 351

NOT TO SCALE

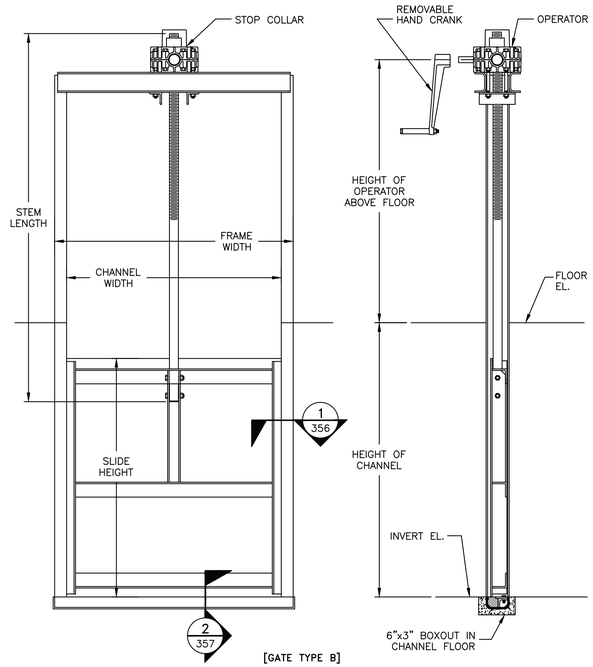

[GATE TYPE B]

STAINLESS STEEL SLUICE GATE 352

NOT TO SCALE

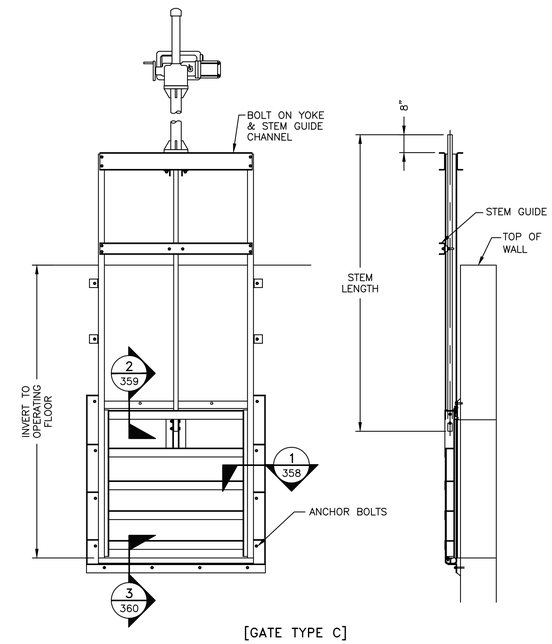

[GATE TYPE C]

STAINLESS STEEL SLUICE GATE 353

NOT TO SCALE

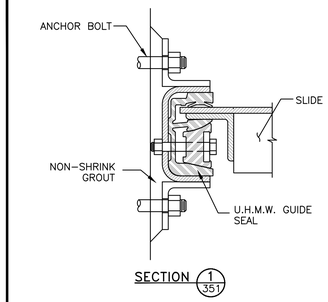

GUIDE DETAIL 354

NOT TO SCALE

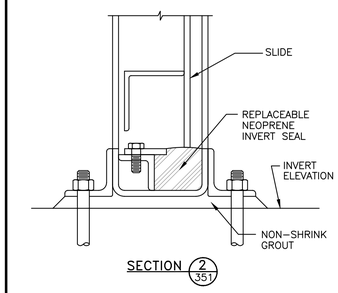

INVERT DETAIL 355

NOT TO SCALE

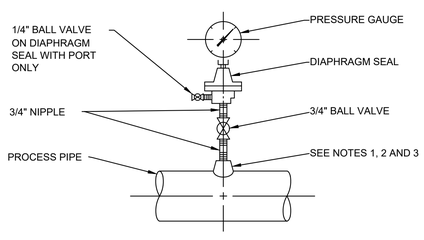

DIAPHRAGM PRESSURE GAUGE

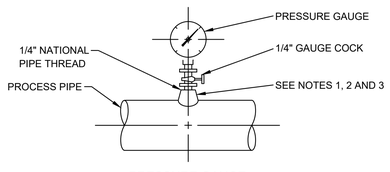

PRESSURE GAUGE

NOTES:

1. FOR STEEL, GALVANIZED STEEL, AND PVC 2 1/2" AND SMALLER USE A BUSHING IN A TEE.
2. FOR DUCTILE IRON AND FIBERGLASS REINFORCED PLASTIC PIPE, ALL SIZES, USE PIPE SADDLE WITH BUSHING.
3. FOR STEEL AND STAINLESS STEEL PIPES 3" AND LARGER, AND PRESSURE VESSELS, USE THRED-O-LET AS SHOWN.
4. PROVIDE SNUBBER FOR POSITIVE DISPLACEMENT PUMP INSTALLATIONS.

PRESSURE GAUGE MOUNTING DETAILS 434

SCALE: NOT TO SCALE

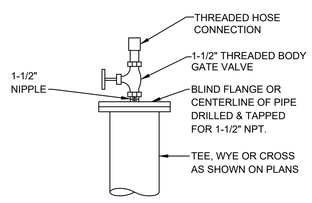

FLUSHING CONNECTION 433

SCALE: NOT TO SCALE

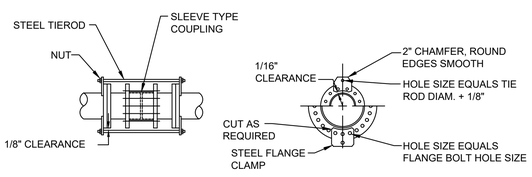

NOTE: TIERODS SHALL BE EQUALLY SPACED AROUND PIPE.

	TIERODS		FLANGE CLAMP			
PIPE SIZE	NO.	DIA.	THICKNESS	NO. OF FLANGE BOLTS PER CLAMP	"A"	"B"
6"	2	1/2"	1/2"	2	2"	7-3/4"
8"	2	5/8"	1/2"	2	2"	8-5/8"
10"	2	3/4"	1/2"	2	2"	7-3/4"
12"	2	1"	1/2"	2	2"	8-1/2"
14"	2	1-1/8"	3/4"	2	2"	9"
16"	2	1-1/4"	7/8"	2	2"	12-1/4"
18"	2	1-3/8"	7/8"	3	2-1/2"	13"
20"	2	1-3/8"	1"	3	2-1/2"	8"
24"	3	1-3/8"	1"	2	2-1/2"	8-3/4"
30"	4	1-3/4"	1"	2	2-1/2"	12-1/4"
36"	4	1-3/4"	1-1/4"	3	2-1/2"	8-1/2"
42"	6	1-3/4"	1-1/4"	2	2-1/2"	12-3/4"
48"	6	1-3/4"	1-1/4"	3	2-1/2"	12-1/2"
	8			3		

SLEEVE COUPLING RESTRAINT (150 PSI FLANGE CLAMP ASSEMBLY) 432

SCALE: NOT TO SCALE

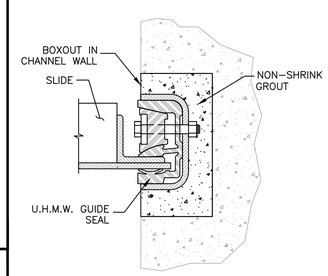

GUIDE DETAIL 356

NOT TO SCALE

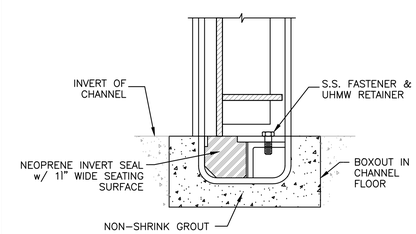

INVERT DETAIL 357

NOT TO SCALE

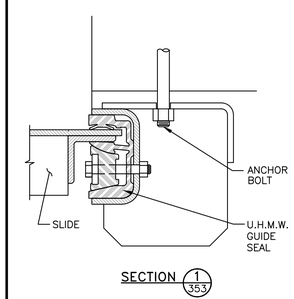

GUIDE DETAIL 358

NOT TO SCALE

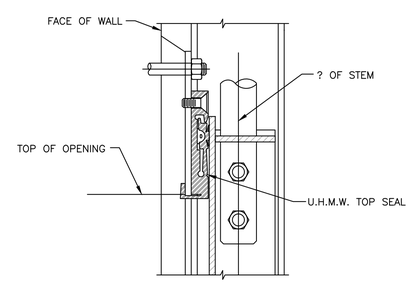

TOP SEAL DETAIL 359

NOT TO SCALE

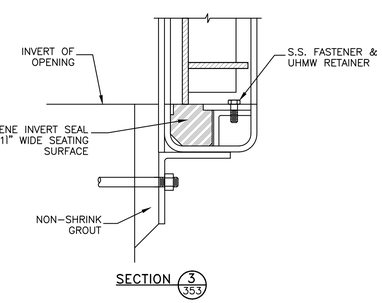

INVERT DETAIL 360

NOT TO SCALE

PREPARED BY

BETA
www.BETA-Inc.com

REGISTERED PROFESSIONAL

COMMONWEALTH OF MASSACHUSETTS
JOSEPH FEDERICO, JR.
No. 30663
REGISTERED PROFESSIONAL ENGINEER

SUBCONSULTANT

PROJECT

Taunton Wastewater Treatment Facility Improvements Phase 2

Taunton, MA

TITLE

Mechanical Details III

NO.	REVISIONS	DATE

DRAWN BY:	BM
DESIGNED BY:	BM
CHECKED BY:	SR
ISSUE DATE:	3/31/2022
BETA JOB NO.:	6050

SCALE

AS SHOWN

UNLESS OTHERWISE NOTED OR CHANGED BY REPRODUCTION

SHEET NO.

MD-3

3/31/2022 10:13 AM J:\TAUNTON\WWTF DESIGN\AUTOCAD\PLAN SET\PHASE 2\MECHANICAL DETAILS.DWG (BETA STD BW.CTB)

3/30/2022 11:40 AM W:\YEAR - 2018\18009.00 - TAUNTON WWTF UPGRADES\HVAC DEPARTMENT\PHASE 2\18009.00 HVAC LEGEND SCHEDULE AND DETAILS-PHASE 2.DWG (BETA STB BW.STB)

GENERAL NOTES

1. HVAC WORK IS INDICATED DIAGRAMMATICALLY. EXACT LOCATIONS OF ALL COMPONENTS ARE TO BE DETERMINED IN THE FIELD AND BY THE ACTUAL BUILDING CONDITIONS. EXISTING DUCTS, PIPING OR EQUIPMENT INTERFERING WITH OTHER INSTALLATIONS SHALL BE RELOCATED AS REQUIRED AT NO ADDITIONAL COST TO THE OWNER. EXACT LOCATIONS MUST HAVE THE APPROVAL OF THE ENGINEER.
2. ALL WORK SHALL BE COORDINATED WITH ALL OTHER TRADES BEFORE ANY INSTALLATION IS MADE.
3. ALL EQUIPMENT SHALL BE INSTALLED IN ACCORDANCE WITH STATE CODES, MANUFACTURER'S APPROVED PUBLISHED LITERATURE, AND AUTHORITIES HAVING JURISDICTION.
4. INSTALLATION OF EQUIPMENT SHALL PERMIT ACCESSIBILITY FOR SERVICE AND/ OR REPLACEMENT.
5. ALL CEILING MOUNTED EQUIPMENT SHALL BE INSTALLED IN SUCH A WAY THAT LIGHTS, PIPING, AND DUCTWORK DO NOT BLOCK ACCESS TO UNITS AND RELATED ACCESSORIES.
6. HVAC CONTRACTOR SHALL COORDINATE ALL WALL, CEILING, FLOOR, ROOF AND BEAM PENETRATIONS WITH THE STRUCTURAL ENGINEER.
7. ALL DUCT SIZES SHOWN ARE NET INSIDE CLEAR DIMENSIONS.
8. PROVIDE VOLUME DAMPERS AT EVERY MAIN BRANCH TAKE-OFF AND AS INDICATED AND IN SUCH OTHER LOCATIONS WHERE REQUIRED TO PROPERLY BALANCE THE SYSTEM. DO NOT INSTALL VOLUME DAMPERS IN NECKS OF DIFFUSERS OR AT DISCHARGE OR INLET GRILLES IN DUCTWORK.
9. PROVIDE INSTRUMENT TEST HOLES WITH CAPS IN AIR DISTRIBUTION SYSTEMS AS REQUIRED TO BALANCE SYSTEM.
10. HVAC CONTRACTOR SHALL BE RESPONSIBLE FOR ALL SHEETMETAL TRANSITIONS AT AIR TERMINAL UNITS, FANS, COILS, AND OTHER SIMILAR HVAC EQUIPMENT.
11. ALL OPEN ENDED DUCTS IN THE CEILING PLENUM SHALL BE UNOBSTRUCTED FOR A MINIMUM DISTANCE OF 24" FROM THE OPENING TO ALLOW FREE AIR FLOW AND SHALL HAVE 3/4" WIRE MESH SCREENING.
12. ALL TRANSFER DUCTS SHALL BE INTERNALLY LINED.
13. ALL MISCELLANEOUS STRUCTURAL SUPPORTS REQUIRED FOR HVAC EQUIPMENT INSTALLATION SHALL BE PROVIDED BY HVAC SUBCONTRACTOR.
14. EXACT LOCATION OF CEILING DIFFUSERS, GRILLES AND REGISTERS TO BE DETERMINED BY ARCHITECTURAL REFLECTED CEILING PLAN.
15. INSTALL ALL PIPING BELOW DUCTWORK UNLESS CLEARANCE CONDITION REQUIRES PIPING TO BE ABOVE.
16. EXACT ELEVATION FOR SIDE WALL DIFFUSERS, REGISTERS AND GRILLES SHALL BE APPROVED BY THE ARCHITECT BEFORE INSTALLATION.
17. UNLESS OTHERWISE NOTED, ALL PIPING RUNOUTS SHALL BE 3/4"
18. ALL EXPOSED EQUIPMENT (REGISTERS, UNIT HEATERS, ETC..) SHALL HAVE COLORS SELECTED BY THE ARCHITECT, UNLESS NOTED OTHERWISE.
19. HVAC SUBCONTRACTOR SHALL BLANK OFF AND INSULATE ALL UNUSED LOUVER AREA.
20. PITCH AIR INTAKE PLENUMS AND PROVIDE DRAIN TO NEAREST FLOOR DRAIN.
21. ALL REGISTERS, GRILLES AND DIFFUSERS LOCATED IN WALLS NEAR FLOOR SHALL BE HEAVY-DUTY TYPE DESIGNED TO WITHSTAND RUGGED IMPACT. REFER TO SCHEDULE. THE SECTION OF DUCTWORK BEHIND THE AIR DEVICE SHALL BE PAINTED FLAT BLACK.
22. EXACT LOCATION OF THERMOSTAT TO BE COORDINATED WITH FINAL LOCATION OF WALL MOUNTED ARCHITECTURAL AND ELECTRICAL EQUIPMENT.
23. ALL MAIN BRANCH PIPES FROM RISERS SHALL HAVE ISOLATION VALVES NEAR SHAFTS. PROVIDE SHUT-OFF VALVES AT EACH SUPPLY BRANCH AND COMBINATION BALANCING SHUT-OFF VALVE AT EACH RETURN BRANCH.
24. PROVIDE FLEXIBLE CONNECTOR ON INTAKES AND DISCHARGES OF ALL AIR HANDLING UNITS.
25. REFRIGERATION PIPING SIZED BY UNIT MANUFACTURER. SUBMIT CALCULATIONS TO ENGINEER FOR APPROVAL.
26. DUCT MOUNTED SMOKE DETECTOR – FURNISHED AND WIRED BY THE ELECTRICAL CONTRACTOR, INSTALLED BY THE HVAC CONTRACTOR.
27. ROOF OPENINGS SHALL BE SIZED FROM APPROVED SHOP DRAWINGS.
28. ALL FLOOR MOUNTED MECHANICAL EQUIPMENT, BOILERS, PUMPS, AIR HANDLERS, ETC. SHALL HAVE A CONCRETE PAD 4" HIGH AND 6" BEYOND EQUIPMENT FOOT PRINT ON ALL FOUR SIDES. CONCRETE PADS SHALL BE SIZE FROM APPROVED SHOP DRAWINGS.
29. ALL DAMPER MOTORS SHALL BE 24 VOLT.
30. PROVIDE DUCT MOUNTED SMOKE DAMPERS AT ALL SMOKE BARRIERS. SMOKE DAMPERS SHALL BE CLOSED AND ASSOCIATED EXH. FAN OR AHU SHALL BE SHUT-DOWN UPON DETECTION OF SMOKE AS SENSED BY AREA SMOKE DETECTORS. DAMPERS SHALL BE RUSKIN TYPE SD 60 OR EQUAL.

DEMOLITION NOTES

1. EXISTING WORK INDICATED TO BE DEMOLISHED SHALL BE REMOVED AND DISPOSED OF.
2. DEMOLITION

ABBREVIATIONS

ACD	AUTOMATIC CONTROL DAMPER
AD	ACCESS DOOR
AFF	ABOVE FINISHED FLOOR
AHAP	AS HIGH AS POSSIBLE
AP	ACCESS PANEL
ARCH	ARCHITECT
ATC	AUTOMATIC TEMPERATURE CONTROL
BDD	BACKDRAFT DAMPER
BTU	BRITISH THERMAL UNIT
BTUH	BRITISH THERMAL UNIT PER HOUR
BOD	BOTTOM OF DUCT
CAP	CAPACITY
CD	CEILING DIFFUSER
CFM	CUBIC FEET PER MINUTE
CO	CLEANOUT
CONT	CONTROLLER
CP	CUT AND CAP
DIA	DIAMETER
DB	DRY BULB TEMPERATURE
DC	DUST COLLECTOR
DDC	DIRECT DIGITAL CONTROL
DN	DOWN
DWG	DRAWING
DX	DIRECT EXPANSION COOLING
EA	EXHAUST AIR
EAT	ENTERING AIR TEMPERATURE
EBB	ELECTRIC BASEBOARD RADIATION
ECH	ELECTRIC CABINET HEATER
ECON	AIR-SIDE ECONOMIZER
EF	EXHAUST FAN
EFF	EFFICIENCY
ELV	ELEVATION
ER	EXHAUST REGISTER
ESP	EXTERNAL STATIC PRESSURE
ETR	EXISTING TO REMAIN
EWT	ENTERING WATER TEMPERATURE
EXH	EXHAUST
FA	FREE AREA
FD	FIRE DAMPER
FLA	FULL LOAD AMPS
FOB	FLAT ON BOTTOM
FOT	FLAT ON TOP
FPI	FINS PER INCH
FPM	FEET PER MINUTE
FT	FEET
FTR	FINNED TUBE RADIATION
GAL	GALLONS
GALV	GALVANIZED
GC	GENERAL CONTRACTOR
GF	GLYCOL FEED
GPM	GALLONS PER MINUTE
HP	HORSEPOWER
HVAC	HEATING, VENTILATING AND AIR CONDITIONING
HGRH	HOT GAS REHEAT
HW	HOT WATER
HZ	HERTZ
IN	INCHES
KE	KITCHEN EXHAUST
KW	KILOWATTS
LAT	LEAVING AIR TEMPERATURE
LD	LINEAR DIFFUSER
LF	LINEAR FEET
LWT	LEAVING WATER TEMPERATURE
MBH	THOUSANDS OF BTU'S PER HOUR
MCC	MOTOR CONTROL CENTER
NC	NORMALLY CLOSED
NIC	NOT IN CONTRACT
NO	NORMALLY OPEN
NTS	NOT TO SCALE
OA	OUTSIDE AIR
OAT	OUTSIDE AIR TEMPERATURE
OBD	OPPOSED BLADE DAMPER
OD	OUTSIDE DIAMETER
OED	OPEN ENDED DUCT
POS	PROVIDED UNDER OTHER SECTIONS
PSI	POUNDS PER SQUARE INCH (GAUGE)
PD	PRESSURE DROP
PRV	PRESSURE REDUCING VALVE
PG	PROPYLENE GLYCOL
R	RETURN
RA	RETURN AIR
RB	REBALANCE
RF	RETURN/EXHAUST FAN
RG	RETURN GRILLE
RM	ROOM
RPM	REVOLUTIONS PER MINUTE
RR	RETURN REGISTER
S	SUPPLY
SA	SUPPLY AIR
SAT	SUPPLY AIR TEMPERATURE
SF	SQUARE FEET, SUPPLY FAN
SP	STATIC PRESSURE
SR	SUPPLY REGISTER
SS	STAINLESS STEEL
STL	STEEL
TYP	TYPICAL
UC	UNDERCUT DOOR
V	VOLTS
VAV	VARIABLE AIR VOLUME
VD	VOLUME DAMPER
VFD	VARIABLE FREQUENCY DRIVE
W/	WITH
W/O	WITHOUT
WB	WET BULB TEMPERATURE
WG	WATER GAUGE
WMS	WIRE MESH SCREEN

PIPING LEGEND

CD	CONDENSATE DRAIN
HWS	HOT WATER SUPPLY
HWR	HOT WATER RETURN
RL	REFRIGERANT LIQUID
RS	REFRIGERANT SUCTION

EQUIPMENT TAG SYMBOLS & ABBREVIATIONS

EQUIPMENT NOT REQUIRING ELECTRIC SERVICE → TAG / NO → SEE SCHEDULE FOR PERFORMANCE REQUIREMENTS ← TAG / NO ← EQUIPMENT REQUIRING ELECTRIC SERVICE

FTR-1 / MBH / LENGTH — FINNED TUBE RADIATION

ACCU	AIR COOLED CONDENSING UNIT
AHU	AIR HANDLING UNIT
AF	AIR FILTER
AS	AIR SEPARATOR
B	BOILER
CC	COOLING COIL
CH	CHILLER
CUH	CABINET UNIT HEATER
C	CONVECTOR
EF	EXHAUST FAN
ERV	ENERGY RECOVERY VENTILATOR
ET	EXPANSION TANK
EUH	ELECTRIC UNIT HEATER
FCU	FAN COIL UNIT
FMS	FLOW MEASURING STATION
FTR	FIN-TUBE RADIATION
HC	HEATING COIL
HP	HEAT PUMP
HRU	HEAT RECOVERY UNIT
HV	HEATING AND VENTILATING UNIT
IRV	INTAKE ROOF VENT
MAU	MAKEUP AIR UNIT
P	PUMP
REF	RETURN/EXHAUST FAN
RF	RETURN FAN
RTU	ROOFTOP UNIT
SA	SOUND ATTENUATOR
SF	SUPPLY FAN
TU	TERMINAL UNIT
UH	UNIT HEATER
UV	UNIT VENTILATOR
VAV	VARIABLE AIR VOLUME UNIT

RB / 2000 — REBALANCE EXISTING CFM TO INDICATED AMOUNTED

INSTRUMENTATION

PI	LOCAL PRESSURE GAUGE W/SHUTOFF AND SNUBBER
DPI	DIFFERENTIAL PRESSURE GAUGE W/SHUTOFFS AND SNUBBERS
TI	LOCAL TEMPERATURE INDICATION
Th	HEATING ONLY THERMOSTAT
Tc	COOLING ONLY THERMOSTAT
T	HEATING/COOLING THERMOSTAT
TT	TEMPERATURE TRANSMITTER
PT	PRESSURE TRANSMITTER
SD	SMOKE DETECTOR
HD	HEAT DETECTOR
FT	FLOW TRANSMITTER
SP	STATIC PRESSURE SENSOR
H	HUMIDITY SENSOR OR HUMIDISTAT
CO2	CARBON DIOXIDE DETECTOR
CO	CARBON MONOXIDE DETECTOR
OS	OCCUPANCY SENSOR
PS	PRESSURE SENSOR SWITCH

VALVES AND ACCESSORIES

- GATE VALVE
- BALL VALVE
- BALL VALVE WITH HOSE BIBB, CAP & CHAIN
- BUTTERFLY VALVE
- GLOBE VALVE
- PRESSURE REDUCING VALVE (SELF-CONTAINED)
- BACKPRESSURE REGULATOR (SELF-CONTAINED)
- CHECK VALVE (SWING TYPE)
- CHECK VALVE (SILENT TYPE)
- STRAINER W/BALL VALVE, HOSE BIBB & CAP (GATE VALVE FOR STEAM)
- ANGLE VALVE
- FUSIBLE LEVEL GATE VALVE
- BALL VALVE, TWO POSITION ACTUATOR
- SOLENOID VALVE (S)
- TWO-WAY AUTOMATIC CONTROL VALVE, MODULATING ACTUATOR
- TWO-WAY AUTOMATIC CONTROL VALVE, TWO POSITION ACTUATOR
- THREE-WAY AUTOMATIC CONTROL VALVE, MODULATING ACTUATOR
- THREE-WAY AUTOMATIC CONTROL VALVE, TWO POSITION ACTUATOR
- AUTOMATIC FLOW CONTROL VALVE (PRESSURE INDEPENDENT)
- COMBINATION FLOWMETER/SHUT OFF/BALANCING VALVE
- FLOW SWITCH
- FLOW METER
- SAFTEY RELIEF VALVE
- UNION OR FLANGE (SEE SPEC)
- BLIND FLANGE
- END CAP
- VB — VACUUM BREAKER
- PT — PRESSURE/TEMPERATURE WELL
- AAV — AUTOMATIC AIR VENT WITH ISOLATION VALVE
- MAV — MANUAL AIR VENT
- REDUCER (ECCENTRIC-FLAT ON BOTTOM OR FLAT ON TOP)
- REDUCER (CONCENTRIC)
- FLEXIBLE CONNECTION
- EXPANSION JOINT
- PIPE GUIDE
- ANCHOR
- RISE (SINGLE LINE – PLAN VIEW)
- DROP (SINGLE LINE – PLAN VIEW)
- TOP TAKEOFF
- BOTTOM TAKEOFF
- PIPE BREAK (SINGLE LINE)
- DIRT LEG
- CLEAN-OUT FOR CONDENSATE DRAIN
- RISE (DOUBLE LINE – PLAN VIEW)
- DROP (DOUBLE LINE – PLAN VIEW)
- PIPE BREAK (DOUBLE LINE)
- DIRECTION OF FLOW IN PIPE
- UP — PITCH PIPE UP IN DIRECTION OF FLOW
- DN — PITCH PIPE DOWN IN DIRECTION OF FLOW
- FINNED TUBE WITH NO ENCLOSURE
- FINNED TUBE WITH WITH ENCLOSURE

FLOW DIAGRAM EQUIPMENT SYMBOLS

- CENTRIFUGAL PUMP
- POSITIVE DISPLACEMENT PUMP
- FILTER (WATER SERVICE)
- SUCTION DIFFUSER W/STRAINER
- * / C — * H = HEATING COIL; C = COOLING COIL; RH = REHEAT COIL; PH = PREHEAT COIL; DX = DIRECT EXPANSION COIL
- ET / 1 — EXPANSION TANK
- AAV, AS / 1 — AIR SEPARATOR

DUCTWORK LEGEND/SYMBOLS

- 12"x"10 — RECTANGULAR DUCTWORK – FIRST DIMENSION IS SIDE SHOWN (IN.) FREE AREA
- 12"ø — ROUND DUCT DIAMETER (IN.)
- SUPPLY/OUTSIDE AIR DUCTWORK UP
- SUPPLY/OUTSIDE AIR DUCTWORK DOWN
- RETURN/EXHAUST AIR DUCTWORK UP
- RETURN/EXHAUST AIR DUCTWORK DOWN
- FLEXIBLE CONNECTION
- ACOUSTICALLY LINED DUCTWORK
- R — CHANGE OF ELEVATION IN DIRECTION OF AIRFLOW (R)RISE,(D)DROP
- 12x10 — RECTANGULAR DUCT TRANSITION
- 12x10, 8x6 — RECTANGULAR TO SINGLE LINE TRANSITION
- 12x10, 10ø — RECTANGULAR TO ROUND TRANSITION
- MITERED ELBOW W/ TURNING VANES
- SUPPLY AIR DIFFUSER BELOW DUCT
- RETURN OR EXHAUST REGISTER BELOW DUCT
- ROUND DUCT UP
- SUPPLY AIR DIFFUSER (SQUARE OR RECTANGULAR)
- SUPPLY AIR DIFFUSER (LINEAR)
- RETURN AIR GRILLE OR REGISTER
- VD — MANUAL VOLUME DAMPER
- FD — SELF-CLOSING FIRE DAMPER W/ACCESS DOOR
- SD — SMOKE DAMPER W/ACCESS DOOR
- ACD — AUTOMATIC CONTROL DAMPER
- SFD — COMBINATION SMOKE/FIRE DAMPER W/ACCESS DOOR
- SUPPLY AIR BLOW DIRECTION
- EXHAUST / RETURN / OR INTAKE

DIFFUSER/REGESTER TAG

- TT-X — TYPE-BLOW (CD-1 = CEILING DIFFUSER)
- 0000 — CFM
- 0"x0" — SIZE

- INLINE CENTRIFUGAL FAN
- ROOF FAN OR VENT
- TERMINAL UNIT (COOLING ONLY)
- TERMINAL UNIT (HEATING/COOLING)
- EXHAUST FAN (SHOWN ON ROOF PLAN)
- EXHAUST FAN (SHOWN ON FLOOR PLAN)

SINGLE LINE DUCTWORK

- DUCTWORK
- SUPPLY/OUTSIDE AIR DUCTWORK UP
- SUPPLY/OUTSIDE AIR DUCTWORK DOWN
- RETURN/EXHAUST AIR DUCTWORK UP
- RETURN/EXHAUST AIR DUCTWORK DOWN
- RECTANGULAR DUCTWORK W/ ACOUSTICAL LINING
- FLEXIBLE CONNECTION
- DUCT TRANSITION
- 90° TAKE OFF
- 90° ELBOW
- BULLHEAD SPLIT SUPPLY/RETURN

PREPARED BY

BETA
www.BETA-Inc.com

REGISTERED PROFESSIONAL

SUBCONSULTANT

SAR ENGINEERING, INC.
Mechanical/Electrical Engineers
150 Grossman Drive, Suite 309
Braintree, Massachusetts 02184
617 328-9215
web: www.sar.com

PROJECT

Taunton Wastewater Treatment Facility Improvements Phase 2

Taunton, MA

TITLE

HVAC Legend and General Notes

NO.	REVISIONS	DATE

DRAWN BY:	RLB
DESIGNED BY:	RHB
CHECKED BY:	RHB
ISSUE DATE:	03/31/22
BETA JOB NO.:	6050

SCALE

NONE

UNLESS OTHERWISE NOTED OR CHANGED BY REPRODUCTION

SHEET NO.

H-0.1

ENERGY RECOVERY UNIT SCHEDULE (PART 1)

ERV –

TAG NO.	BUILDING	SUPPLY AIR PERFORMANCE							EXHAUST AIR NORMAL PERFORMANCE						DX COOLING COIL								HOT WATER HEATING COIL									ELECTRIC HEATER DATA								ELECTRICAL DATA				
		SUPPLY IN CFM	MIN. OA IN CFM	ESP (IN WC)	TSP (IN WC)	FAN RPM	OPERATING POWER HP	MOTOR SIZE HP	EXH./RET. OUT CFM	E.S.P. IN (W.C.)	TOTAL SP IN (W.C.)	FAN RPM	OPERATING POWER HP	MOTOR SIZE HP	REFRIG TYPE	TOTAL MBH	SENSIBLE MBH	ROWS	EAT (DB °F)	EAT (WB °F)	LAT (DB °F)	LAT (WB °F)	CAPACITY (MBH)	GPM	EAT (DB °F)	LAT (DB °F)	EWT (DB °F)	LWT (DB °F)	% GLYCOL	WPD (FT)	APD (IN WC)	KW	ENT. °F	LVG. °F	AMPS	CONTROL	V	PHASE	HZ	MCA	MOCP	V	PHASE	HZ
4ERV–1	SLUDGE PUMP STATION NO.1	9,560	9,560	1.3	2.721	1431	(2) 2.92	(2) 3	9,560	1.3	2.132	2126	(2) 3.08	(2) 5	N/A	N/A	N/A	N/A	N/A	N/A	N/A	N/A	N/A	N/A	N/A	N/A	N/A	N/A	N/A	N/A	N/A	40	51.9	65.1	–	SCR	480	3	60	24.3	30	480	3	60
4ERV–2	SLUDGE PUMP STATION NO.2	7,500	7,500	1.3	3.766	1919	(1) 7.43	(1) 7.5	7,500	1.3	3.09	1892	(1) 7.13	(1) 7.5	N/A	N/A	N/A	N/A	N/A	N/A	N/A	N/A	N/A	N/A	N/A	N/A	N/A	N/A	N/A	N/A	N/A	35	47.9	62.7	–	SCR	480	3	60	23.1	30	480	3	60

ENERGY RECOVERY UNIT SCHEDULE (PART 2)

ERV –

TAG NO.	ENERGY RECOVERY WHEEL PERFORMANCE								WEIGHT LBS	SUPPLY FILTER	OUTDOOR FILTER	MANUFACTURER MODEL NUMBER	REMARKS
	WINTER CONDITIONS DESIGN				SUMMER CONDITIONS DESIGN								
	OUTDOOR		INDOOR		OUTDOOR		INDOOR						
	DB °F	WB °F	DB °F	RH%	DB °F	WB °F	DB °F	RH%					
4ERV–1	7.4	5.3	72	35	90.8	76.2	75	50	5,547	MERV–6	MERV–8	GREENHECK RVE–150–74–30H	1 2 3 4 5 6 7
4ERV–2	7.4	5.3	72	35	90.8	76.2	75	50	3,558	MERV–6	MERV–8	GREENHECK RVE–85–58–30H	1 2 3 4 5 6 7

1 BASE RAILS 2 LOW LEAKAGE DAMPERS 3 RECIRC. DAMPER 4 FACTORY SUPPLY & EXHAUST FAN VFD 5 ENERGY BYPASS WHEEL DAMPER
6 FACTORY MOUNTED DISCONNECT 7 SINGLE POINT POWER CONNECTION

ELECTRIC UNIT HEATER SCHEDULE

EUH –

TAG NO.	BUILDING	CAPACITY	FAN DATA				MANUFACTURER MODEL NUMBER	REMARKS
		KW	CFM	V	PH	HZ		
4EUH–1	SLUDGE PUMP STATION NO.1	7.5	270	480	3	60	QMARK QWD07432	–
4EUH–2	SLUDGE PUMP STATION NO.1	7.5	270	480	3	60	QMARK QWD07432	–
4EUH–3	SLUDGE PUMP STATION NO.1	10	270	480	3	60	QMARK QWD10432	–
4EUH–4	SLUDGE PUMP STATION NO.1	10	270	480	3	60	QMARK QWD10432	–
4EUH–5	SLUDGE PUMP STATION NO.2	7.5	270	480	3	60	QMARK QWD07432	–
4EUH–6	SLUDGE PUMP STATION NO.2	10	270	480	3	60	QMARK QWD10432	–
4EUH–7	SLUDGE PUMP STATION NO.2	10	270	480	3	60	QMARK QWD10432	–
9EUH–1	STORAGE BUILDING	10	500	480	3	60	QMARK IUH–1048	–
9EUH–2	STORAGE BUILDING	10	500	480	3	60	QMARK IUH–1048	–
9EUH–3	STORAGE BUILDING	5	270	480	3	60	QMARK IUH–548	–
9EUH–4	STORAGE BUILDING	5	270	480	3	60	QMARK IUH–548	–

EXHAUST FAN SCHEDULE

EF –

TAG NO.	BUILDING	CFM	ESP (IN WC)	SPEED (RPM)		DRIVE	ELECTRICAL DATA				MANUFACTURER & MODEL #	REMARKS
				FAN	MOTOR		HP	V	PH	HZ		
9EF–1	STORAGE BUILDING	460	0.50	1488	1725	DIRECT	1/4	120	1	60	GREENHECK CUE–100HP–VG	

FUEL OIL SUBMERSIBLE PUMP SCHEDULE

SMP

TAG NO.	BUILDING	SYSTEM SERVED	TYPE	GPH	HEAD (FT.)	ELECTRICAL DATA				MANUFACTURER MODEL NUMBER	REMARKS
						MOTOR HP	V	PH	HZ		
7SMP–1	SLUDGE HANDLING	FUEL OIL	SUB.	20.7	–	3/4	480	3	60	RED JACKET ALCOHOL P75U1	
7SMP–2	SLUDGE HANDLING	FUEL OIL	SUB.	20.7	–	3/4	480	3	60	RED JACKET ALCOHOL P75U1	
9SMP–1	ADMINISTRATION BUILDING	FUEL OIL	SUB.	19.2	–	3/4	480	3	60	RED JACKET ALCOHOL P75U1	
9SMP–2	ADMINISTRATION BUILDING	FUEL OIL	SUB.	19.2	–	3/4	480	3	60	RED JACKET ALCOHOL P75U1	

DIFFUSER, REGISTER & GRILLE SCHEDULE

TAG NO.	MODULE SIZE (IN)	ROUND APAPTER SIZE (IN)	FLEX DUCT SIZE (IN)	SQUARE DUCT SIZE (IN)	SERVICE	CFM RANGE		MAX. NC. LEVEL	MANUFACTURER & MODEL NO.	REMARKS
						MIN	MAX			
SR–1	30x12	N/A	N/A	N/A	SUPPLY	500	2400	40	NAILOR 45DL	
SR–2	20x12	N/A	N/A	N/A	SUPPLY	200	1800	40	NAILOR 45DL	
ER–1	42x12	N/A	N/A	N/A	EXHAUST	500	2500	40	NAILOR 6755H–HD	
ER–2	10x6	N/A	N/A	N/A	EXHAUST	140	245	25	NAILOR 6145H	STAINLESS STEEL
ER–3	50x12	N/A	N/A	N/A	EXHAUST	2500	3200	40	NAILOR 6755H–HD	
ER–4	28x46	N/A	N/A	N/A	EXHAUST	3300	6000	40	NAILOR 6755H–HD	

PREPARED BY

BETA
www.BETA-Inc.com

REGISTERED PROFESSIONAL

COMMONWEALTH OF MASSACHUSETTS
RICHARD H. BROWN
MECHANICAL
NO. 45505
REGISTERED PROFESSIONAL ENGINEER

SUBCONSULTANT

SAR ENGINEERING, INC.
Mechanical/Electrical Engineers
150 Grossman Drive, Suite 309
Braintree, Massachusetts 02184
617 328-9215
web: www.sar.com

PROJECT

Taunton Wastewater Treatment Facility Improvements Phase 2

Taunton, MA

TITLE

HVAC Schedules

NO.	REVISIONS	DATE

DRAWN BY:	RLB
DESIGNED BY:	RHB
CHECKED BY:	RHB
ISSUE DATE:	03/31/22
BETA JOB NO.:	6050

SCALE

NONE

UNLESS OTHERWISE NOTED OR CHANGED BY REPRODUCTION

SHEET NO.

H-0.2

3/30/2022 11:42 AM W:\YEAR - 2018\18009.00 - TAUNTON WWTF UPGRADES\HVAC DEPARTMENT\PHASE 2\18009.00 HVAC LEGEND SCHEDULE AND DETAILS-PHASE 2.DWG (BETA STB BW.STB)

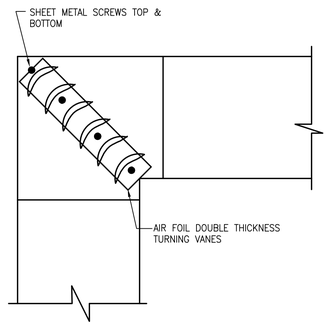

NOTE:
PROVIDE TURNING VANES IN ALL 90° DUCT ELBOWS HAVING A CENTERLINE RADIUS LESS THEN 1 1/2 TIMES THE DUCT WIDTH.

1 TYPICAL 90° DUCT ELBOW DETAIL
NO SCALE

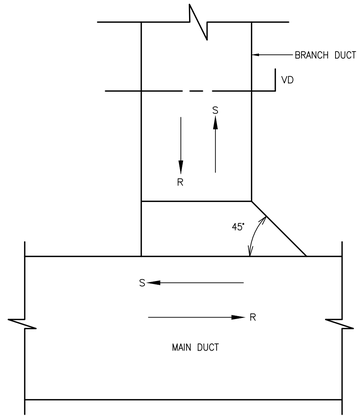

2 BRANCH DUCT CONNECTION DETAIL
NO SCALE

DIFFUSER NECK SIZE	ROUND DUCT SIZE
6"X6"	6"ø
7 1/2"X7 1/2"	7"ø
9"X9"	9"ø
10 1/2"X10 1/2"	10"ø
12"X12"	12"ø

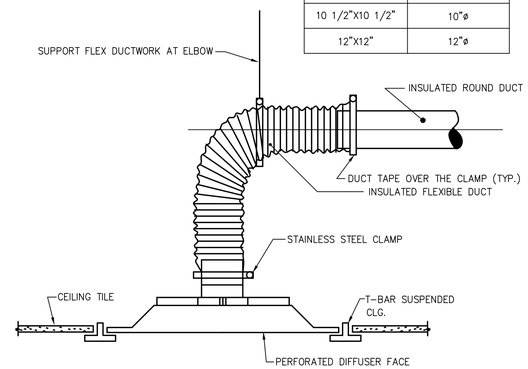

3 SUPPLY DIFFUSER CONNECTION DETAIL
NO SCALE

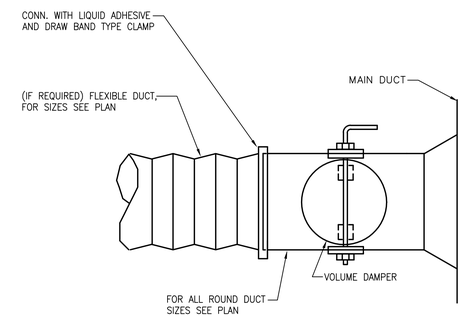

4 ROUND BRANCH DUCT TAKE-OFF DETAIL
NO SCALE
HD-017

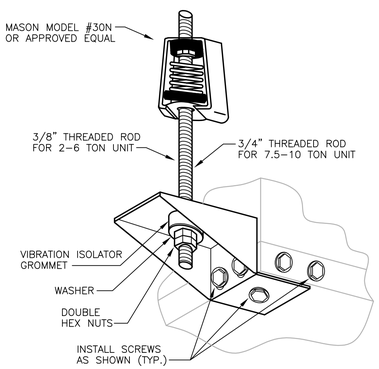

5 HORIZONTAL HEAT PUMP UNIT HANGER KIT ASSEMBLY
NO SCALE

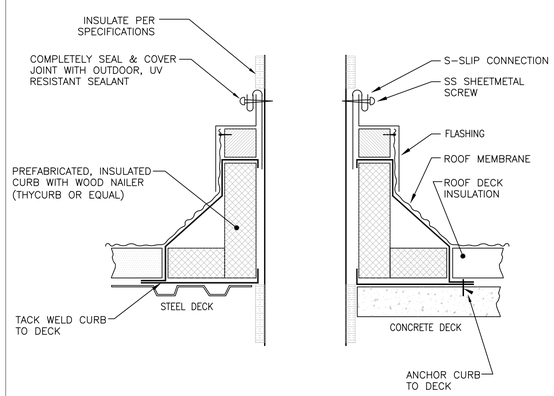

6 DUCT PENETRATION THRU ROOF DETAIL
NO SCALE

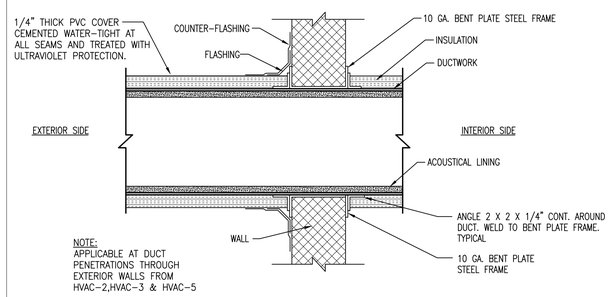

NOTE:
APPLICABLE AT DUCT PENETRATIONS THROUGH EXTERIOR WALLS FROM HVAC-2,HVAC-3 & HVAC-5

7 DUCT PENETRATION AT EXTERIOR WALL DETAIL
NO SCALE

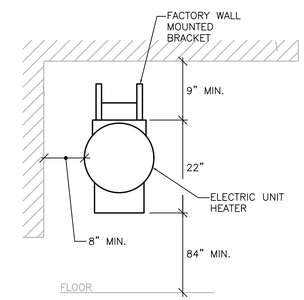

8 ELEC UNIT HEATER MOUNTING DETAIL
NO SCALE

PREPARED BY

BETA
www.BETA-Inc.com

REGISTERED PROFESSIONAL

COMMONWEALTH OF MASSACHUSETTS
ROBERTA HOHN
MECHANICAL
NO. 45505
REGISTERED PROFESSIONAL ENGINEER

SUBCONSULTANT

SAR ENGINEERING, INC.
Mechanical/Electrical Engineers
150 Grossman Drive, Suite 309
Braintree, Massachusetts 02184
617 328-9215
web: www.sar.com

PROJECT

Taunton Wastewater Treatment Facility Improvements Phase 2

Taunton, MA

TITLE

HVAC Details

NO.	REVISIONS	DATE

DRAWN BY:	RLB
DESIGNED BY:	RHB
CHECKED BY:	RHB
ISSUE DATE:	03/31/22
BETA JOB NO.:	6050

SCALE

NONE

UNLESS OTHERWISE NOTED OR CHANGED BY REPRODUCTION

SHEET NO.

H-0.3

3/30/2022 11:42 AM W:\YEAR - 2018\18009.00 - TAUNTON WWTF UPGRADES\HVAC DEPARTMENT\PHASE 2\18009.00 HVAC LEGEND SCHEDULE AND DETAILS-PHASE 2.DWG (BETA STB BW STB)

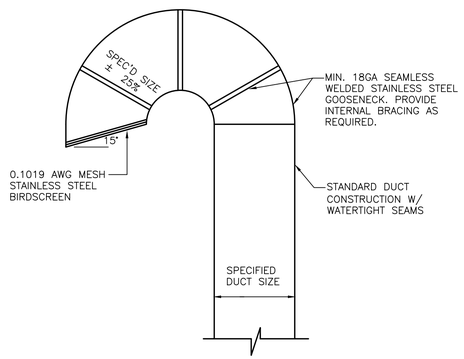

9 GOOSENECK DETAIL
NO SCALE

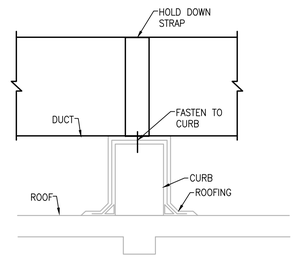

10 ROOFTOP DUCT MOUNTING DETAIL
NO SCALE

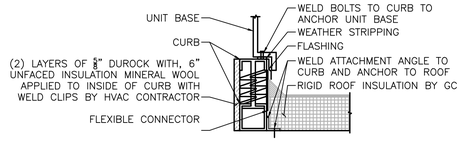

11 ERV / RTU CURB MOUNTING DETAIL
NO SCALE

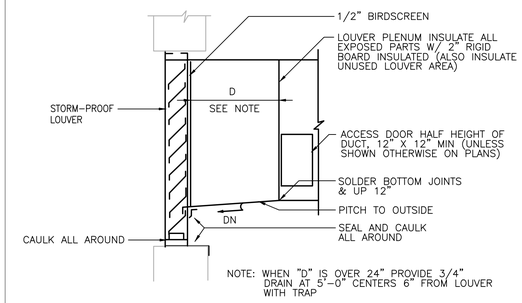

14 LOUVER CONNECTION
NO SCALE

PREPARED BY

BETA
www.BETA-Inc.com

REGISTERED PROFESSIONAL

SUBCONSULTANT

SAR ENGINEERING, INC.

Mechanical/Electrical Engineers
150 Grossman Drive, Suite 309
Braintree, Massachusetts 02184
617.328.9215
web: www.sar.com

PROJECT

Taunton Wastewater Treatment Facility Improvements Phase 2

Taunton, MA

TITLE

HVAC Details

NO.	REVISIONS	DATE

DRAWN BY:	RLB
DESIGNED BY:	RHB
CHECKED BY:	RHB
ISSUE DATE:	03/31/22
BETA JOB NO.:	6050

SCALE

NONE

UNLESS OTHERWISE NOTED OR CHANGED BY REPRODUCTION

SHEET NO.

H-0.4

3/30/2022 11:42 AM W:\YEAR - 2018\18009.00 - TAUNTON WWTF UPGRADES\HVAC DEPARTMENT\PHASE 2\18009.00 HVAC LEGEND SCHEDULE AND DETAILS-PHASE 2.DWG (BETA STB BW.STB)

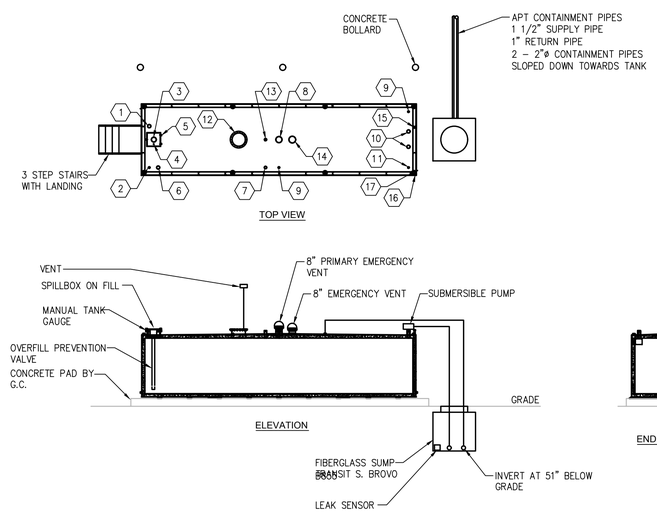

ITEM	SIZE	SUGGESTED FUNCTION
1	4"	PHASE 1 VAPOR RECOVERY/SPARE – NOT USED
2	2"	MECHANICAL GAUGE
3	6"	FILL
4	1/2"	DRAIN FOR SPILLBOX
5	15 GAL.	SPILLBOX
6	4"	ELECTRONIC LEVEL GAUGE CONNECTION TO TGLD
7	3"	NOT USED
8	8"	PRIMARY TANK EMERGENCY VENT
9	2"	SPARE – NOT USED
10	4"	SUBMERSIBLE PUMP
11	2"	SUCTION PUMP/SPARE – NOT USED
12	18"	ABOVE LIQUID MANHOLE
13	2"	SECONDARY WORKING VENT– NOT USED
14	8"	SECONDARY CONTAINMENT EMERGENCY VENT
15	2"	SECONDARY MONITOR PIPE – NOT USED
16	6"	CONCRETE AGGREGATE
17	2" X 2"	GROUND CLIP

TANK SPECIFICATION
VENTING CAPACITY: PRIMARY TANK – 428,000 CUBIC FEET PER HOUR
SECONDARY TANK – 462,000 CUBIC FEET PER HOUR

NOTES:
1. CONNECTIONS AT TANK ARE SCHEMATIC AND SHALL BE ADAPTED TO THE SUBMITTED TANK
2. CAP OR PLUG UNUSED CONNECTION

1

ABOVE GROUND STORAGE TANK DETAIL

NO SCALE

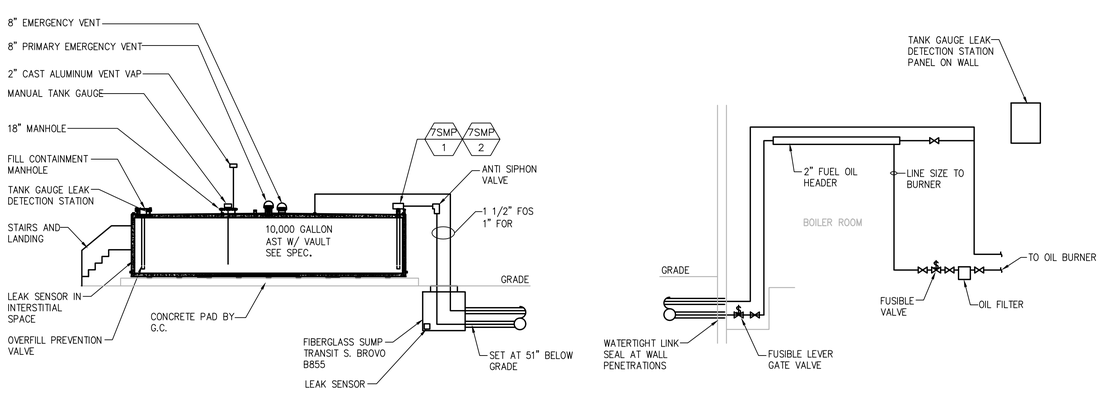

2

FUEL OIL SCHEMATIC

NO SCALE

PREPARED BY

BETA
www.BETA-Inc.com

REGISTERED PROFESSIONAL

SUBCONSULTANT

SAR ENGINEERING, INC.

Mechanical/Electrical Engineers
150 Grossman Drive, Suite 309
Braintree, Massachusetts 02184
617 328-9215
web: www.sar.com

PROJECT

Taunton Wastewater Treatment Facility Improvements Phase 2

Taunton, MA

TITLE

HVAC Solid Handling Fuel Oil Details

NO.	REVISIONS	DATE

DRAWN BY:	RLB
DESIGNED BY:	RHB
CHECKED BY:	RHB
ISSUE DATE:	03/31/22
BETA JOB NO.:	6050

SCALE

NONE

UNLESS OTHERWISE NOTED OR CHANGED BY REPRODUCTION

SHEET NO.

H-0.5

3/30/2022 11:57 AM W:\YEAR - 2018\18009.00 - TAUNTON WWTF UPGRADES\HVAC DEPARTMENT\PHASE 2\18009.00 HVAC LEGEND SCHEDULE AND DETAILS-PHASE 2.DWG (BETA STB BW.STB)
5/21/2021 8:07 AM W:\YEAR - 2018\18009.00 - TAUNTON WWTF UPGRADES\HVAC DEPARTMENT\PHASE 2\18009.00 HVAC LEGEND SCHEDULE AND DETAILS-PHASE 2.DWG (BETA STB BW.STB)

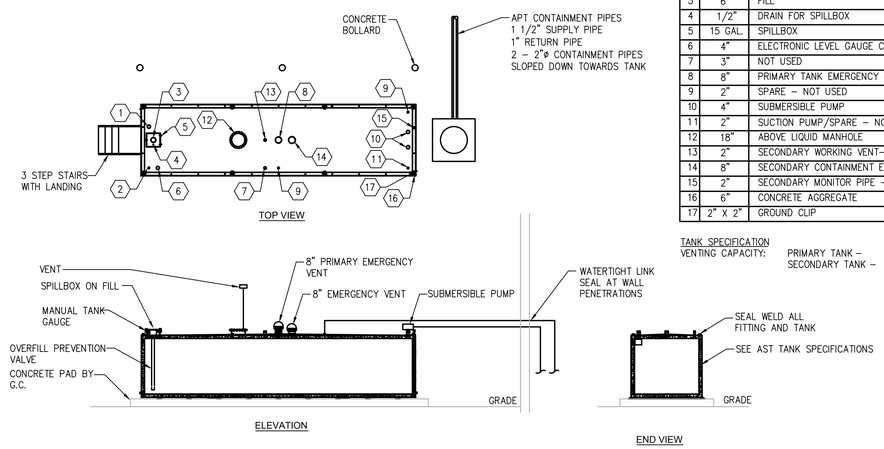

ITEM	SIZE	SUGGESTED FUNCTION
1	4"	PHASE 1 VAPOR RECOVERY/SPARE – NOT USED
2	2"	MECHANICAL GAUGE
3	6"	FILL
4	1/2"	DRAIN FOR SPILLBOX
5	15 GAL.	SPILLBOX
6	4"	ELECTRONIC LEVEL GAUGE CONNECTION TO TGLD
7	3"	NOT USED
8	8"	PRIMARY TANK EMERGENCY VENT
9	2"	SPARE – NOT USED
10	4"	SUBMERSIBLE PUMP
11	2"	SUCTION PUMP/SPARE – NOT USED
12	18"	ABOVE LIQUID MANHOLE
13	2"	SECONDARY WORKING VENT– NOT USED
14	8"	SECONDARY CONTAINMENT EMERGENCY VENT
15	2"	SECONDARY MONITOR PIPE – NOT USED
16	6"	CONCRETE AGGREGATE
17	2" X 2"	GROUND CLIP

TANK SPECIFICATION
VENTING CAPACITY: PRIMARY TANK – 428,000 CUBIC FEET PER HOUR
SECONDARY TANK – 462,000 CUBIC FEET PER HOUR

NOTES:
1. CONNECTIONS AT TANK ARE SCHEMATIC AND SHALL BE ADAPTED TO THE SUBMITTED TANK
2. CAP OR PLUG UNUSED CONNECTION

3

ABOVE GROUND STORAGE TANK DETAIL

NO SCALE

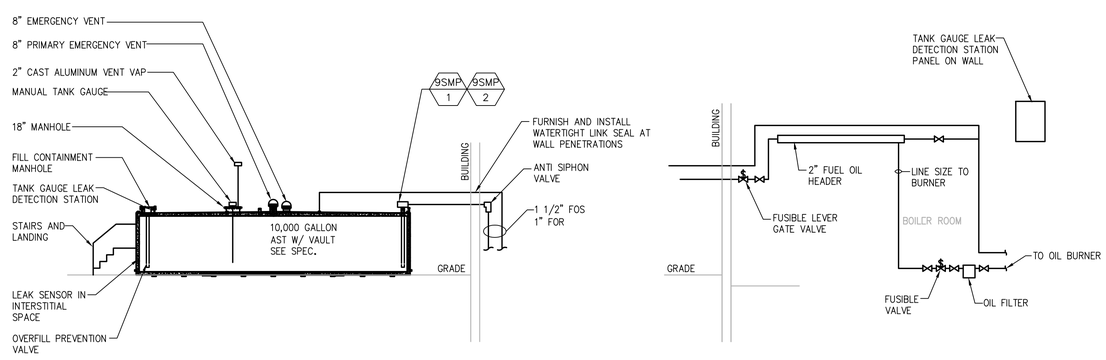

4

FUEL OIL SCHEMATIC

NO SCALE

PREPARED BY

BETA
www.BETA-Inc.com

REGISTERED PROFESSIONAL

SUBCONSULTANT

SAR ENGINEERING, INC.
Mechanical/Electrical Engineers
150 Grossman Drive, Suite 309
Braintree, Massachusetts 02184
617 328-9215
web: www.sar.com

PROJECT

Taunton Wastewater Treatment Facility Improvements Phase 2

Taunton, MA

TITLE

HVAC Admin Building Fuel Oil Details

NO.	REVISIONS	DATE

DRAWN BY:	RLB
DESIGNED BY:	RHB
CHECKED BY:	RHB
ISSUE DATE:	03/31/22
BETA JOB NO.:	6050

SCALE

NONE

UNLESS OTHERWISE NOTED OR CHANGED BY REPRODUCTION

SHEET NO.

H-0.6

3/30/2022 11:57 AM W:\YEAR - 2018\18009.00 - TAUNTON WWTF UPGRADES\HVAC DEPARTMENT\PHASE 2\18009.00 HVAC LEGEND SCHEDULE AND DETAILS-PHASE 2.DWG (BETA STB BW.STB)

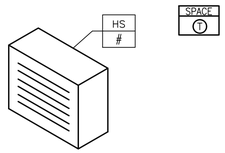

1 TYPICAL ELECTRIC UNIT HEATER CONTROL DIAGRAM

NO SCALE

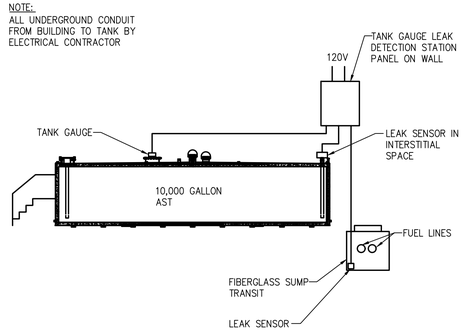

2 TANK GAUGE / LEAK DETECTION SCHEMATIC

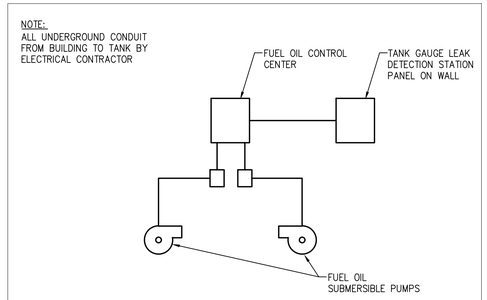

3 FUEL OIL CONTROL SCHEMATIC

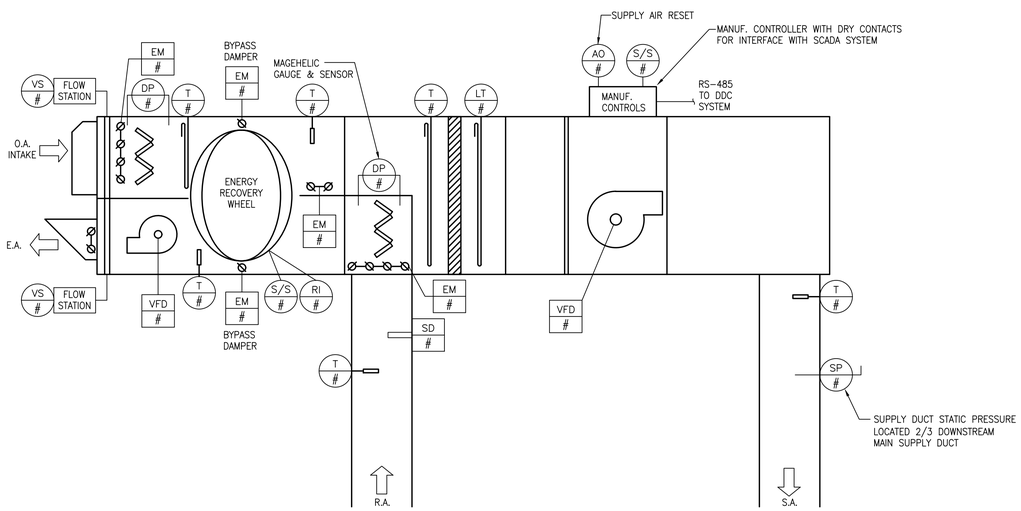

8 TYPICAL ENERGY RECOVERY UNIT CONTROL DIAGRAM

NO SCALE

CONTROLS LEGEND

- SPACE T O # — WALL MOUNTED SPACE TEMPERATURE THERMOSTAT AND/OR OCCUPANCY OVER-RIDE BUTTON
- T # — WATER TEMPERATURE SENSOR/THERMOSTAT
- FS # — DIFFERENTIAL PRESSURE FLOW SENSOR (AIR) PADDLE FLOW SENSOR (WATER)
- DP # — FILTER DIFFERENTIAL SENSOR
- VS # — VELOCITY TRANDUCER
- AO # — ANALOG OUTPUT FROM EMS
- EV # — ELECTRONIC VALVE ACTUATOR
- EM # — ELECTRONIC DAMPER MOTOR ACTUATOR
- SP # — STATIC PRESSURE SENSOR
- T # — DUCT MOUNTED TEMPERATURE SENSOR/THERMOSTAT
- H # — DUCT MOUNTED RELATIVE HUMIDITY SENSOR
- LT # — DUCT MOUNTED LOW TEMP. FREEZE THERMOSTAT
- T # — DUCT MOUNTED AVERAGING THERMOSTAT
- EM # — ELECTRONIC MOTORIZED DAMPER ACTUATOR
- HOA # — HAND-AUTO-OFF STARTER
- SD # — DUCT SMOKE DETECTOR (FURNISHED BY OTHERS)
- OC # — OCCUPANCY SENSOR (COORDINATE W/ ELECTRICAL)
- AL # — ALARM (DIGITAL AND ANALOG)
- SM # — KITCHEN HOOD SMOKE SENSOR
- VFD # — VARIABLE FREQUENCY DRIVE
- VS # — VELOCITY SENSOR
- CO_2 # — CO_2 SENSOR
- CO — CO SENSOR
- S/S # — START-STOP
- SC # — SPEED CONTROL
- RI # — RELAY INPUT

ASC	APPLICATION SPECIFIC CONTROLLER
BC	BUILDING CONTROLLER
CAC	CUSTOM APPLICATION CONTROLLER
DDCFP	DDC FIELD PANEL
	CONNECT NEW TO EXISTING

PREPARED BY

BETA
www.BETA-Inc.com

REGISTERED PROFESSIONAL

COMMONWEALTH OF MASSACHUSETTS
ROBERT H. BROWN
MECHANICAL
NO. 45555
REGISTERED PROFESSIONAL ENGINEER

SUBCONSULTANT

SAR ENGINEERING, INC.
Mechanical/Electrical Engineers
150 Grossman Drive, Suite 309
Braintree, Massachusetts 02184
617 328-9215
web: www.sar.com

PROJECT

Taunton Wastewater Treatment Facility Improvements Phase 2

Taunton, MA

TITLE

HVAC Controls Schematic

NO.	REVISIONS	DATE

DRAWN BY:	RLB
DESIGNED BY:	RHB
CHECKED BY:	RHB
ISSUE DATE:	03/31/22
BETA JOB NO.:	6050

SCALE

NONE

UNLESS OTHERWISE NOTED OR CHANGED BY REPRODUCTION

SHEET NO.

H-0.7

3/30/2022 11:44 AM W:\YEAR - 2018\18009.00 - TAUNTON WWTF UPGRADES\HVAC DEPARTMENT\PHASE 2\18009.00 HVAC LEGEND SCHEDULE AND DETAILS-PHASE 2.DWG (BETA STB BW.STB)

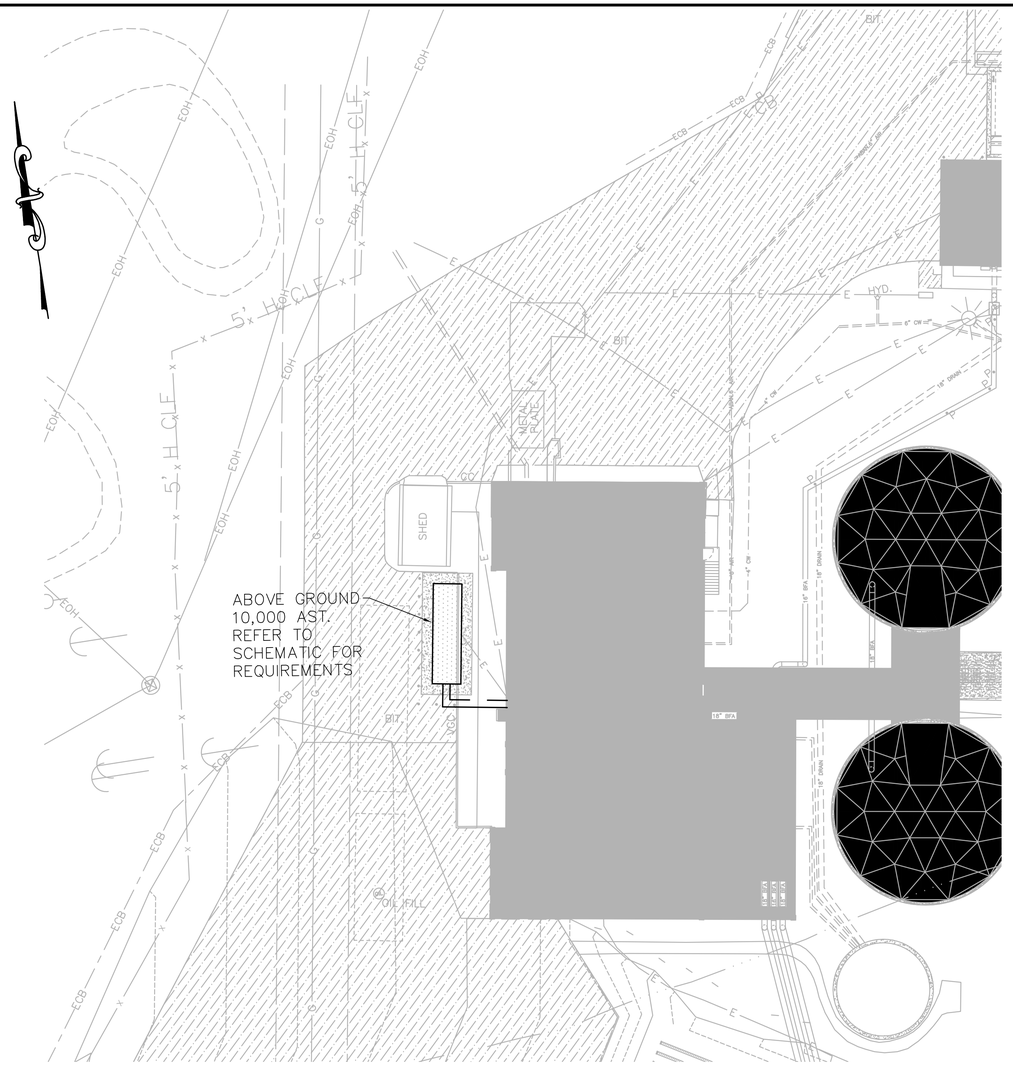

SOLID HANDLING SITE PLAN
SCALE: 1" = 20'-0"

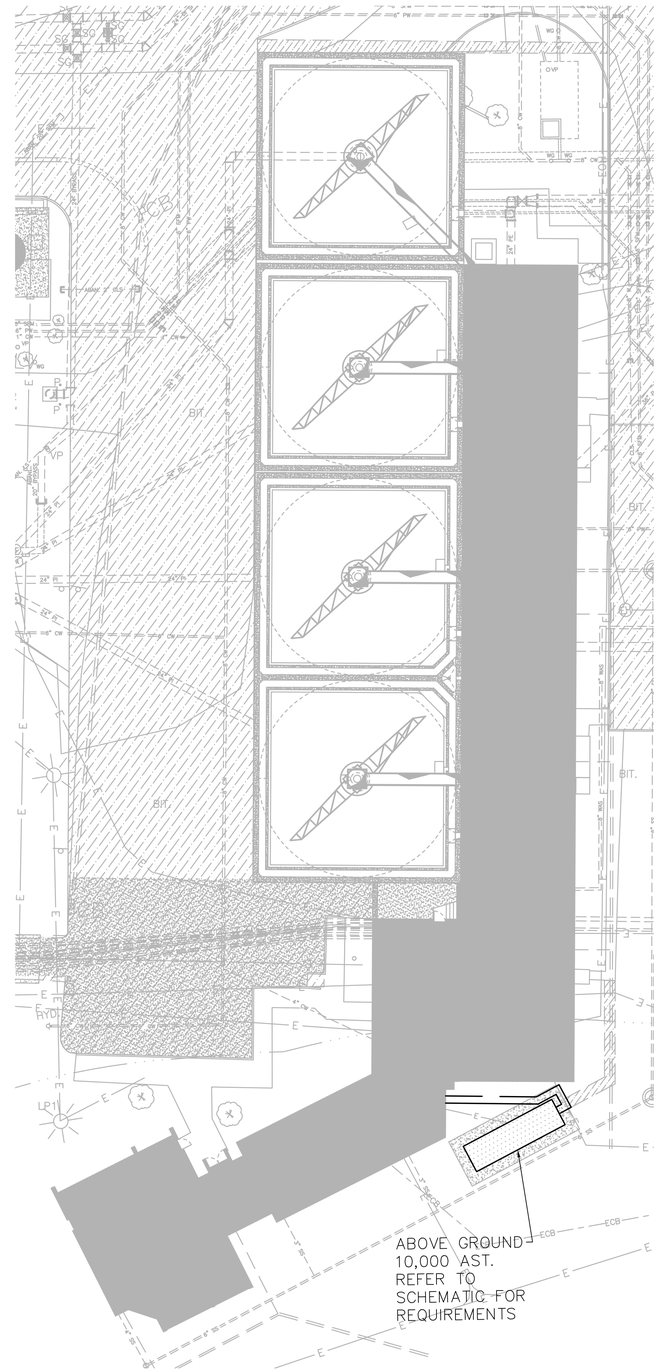

ADMIN SITE PLAN
SCALE: 1" = 20'-0"

PREPARED BY

BETA
www.BETA-Inc.com

REGISTERED PROFESSIONAL

COMMONWEALTH OF MASSACHUSETTS
ROBERTA L. BROWN
MECHANICAL
No. 45505
REGISTERED PROFESSIONAL ENGINEER

SUBCONSULTANT

SAR ENGINEERING, INC.
Mechanical/Electrical Engineers
150 Grossman Drive, Suite 309
Braintree, Massachusetts 02184
617 328-9215
web: www.sar.com

PROJECT

Taunton Wastewater Treatment Facility Improvements Phase 2

Taunton, MA

TITLE

HVAC
Site Plan

NO.	REVISIONS	DATE

DRAWN BY:	RLB
DESIGNED BY:	MC
CHECKED BY:	MC
ISSUE DATE:	03/31/22
BETA JOB NO.:	6050

SCALE

40 0 40 80
SCALE IN FEET: 1"=40'

UNLESS OTHERWISE NOTED OR CHANGED BY REPRODUCTION

SHEET NO.

H-0.8

3/30/2022 11:38 AM W:\YEAR - 2018\18009.00 - TAUNTON WWTF UPGRADES\HVAC DEPARTMENT\PHASE 2\18009.00 HVAC SITE PLAN DWG (BETA STB BW.STB)

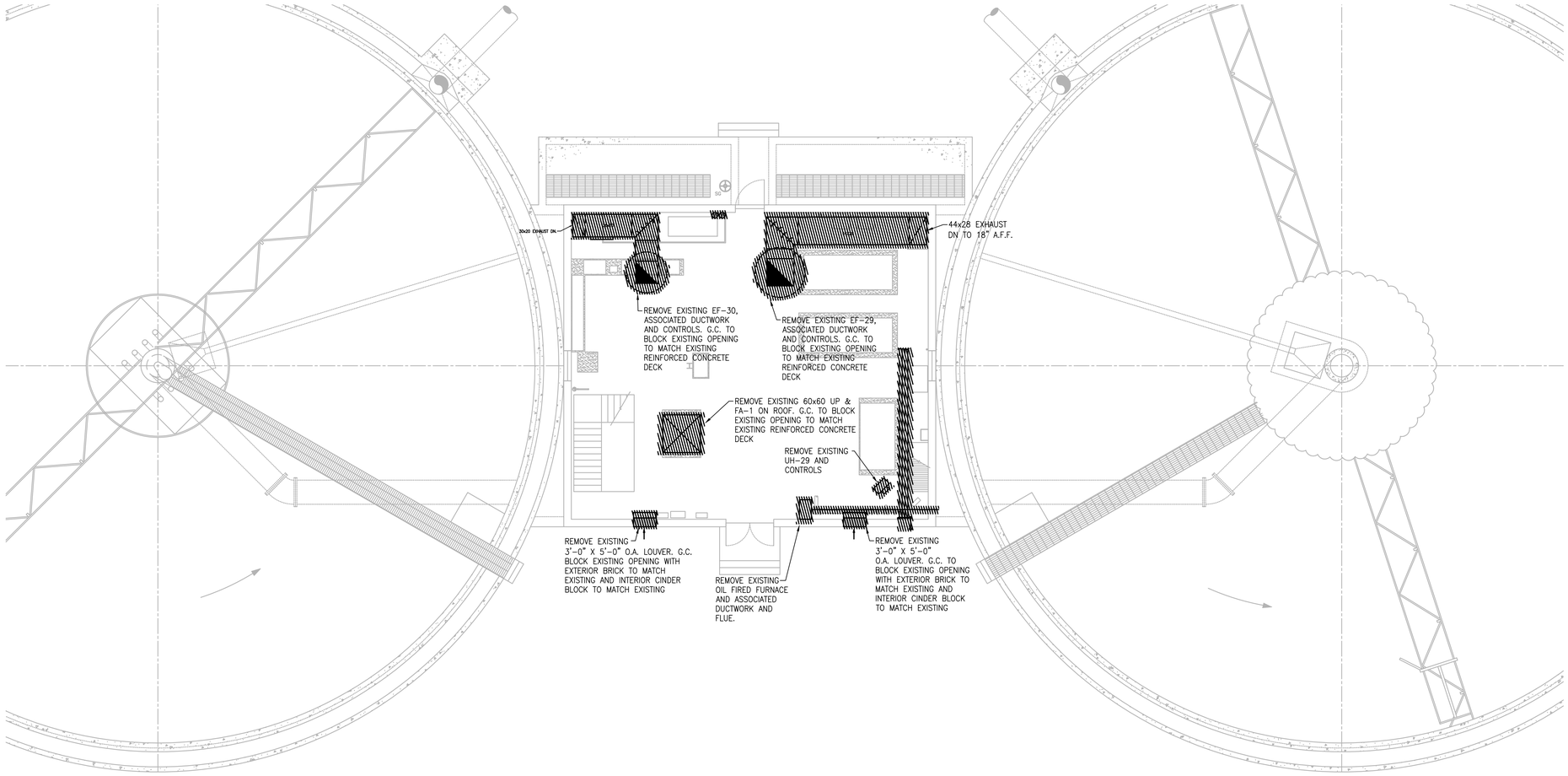

UPPER LEVEL PLAN

SCALE: 1/8"= 1'-0"

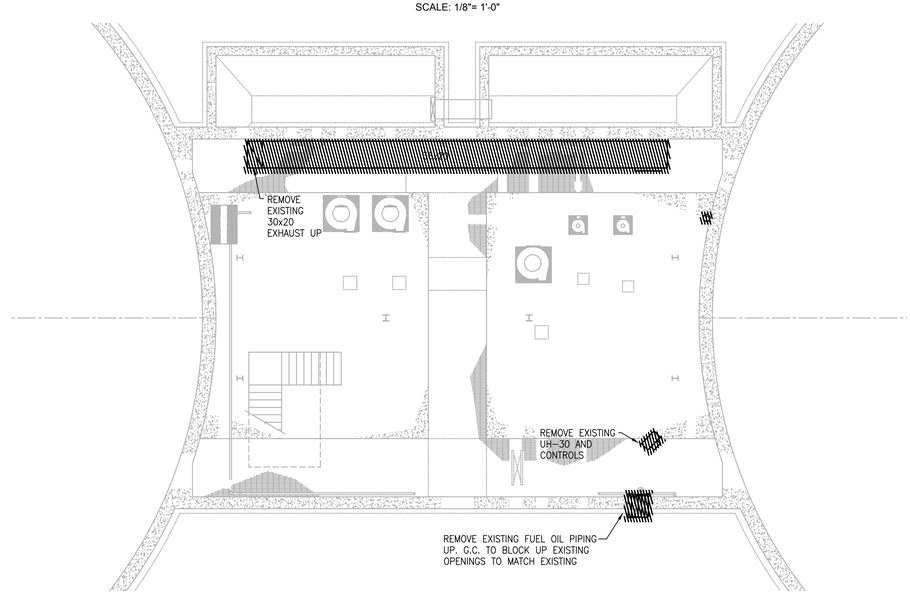

LOWER LEVEL PLAN

SCALE: 1/8"= 1'-0"

PREPARED BY

BETA
www.BETA-Inc.com

REGISTERED PROFESSIONAL

NOT FOR CONSTRUCTION (CONCEPTUAL)

SUBCONSULTANT

SAR ENGINEERING, INC.
Mechanical/Electrical Engineers
150 Grossman Drive, Suite 309
Braintree, Massachusetts 02184
617 328-9215
web: www.sar.com

PROJECT

Taunton Wastewater Treatment Facility Improvements Phase 2

Taunton, MA

TITLE

HVAC Demolition Final Clarifiers No. 1 & 2 Plan & Sludge Pump Station No.1 Plan

NO.	REVISIONS	DATE

DRAWN BY:	RLB
DESIGNED BY:	RHB
CHECKED BY:	RHB
ISSUE DATE:	03/31/22
BETA JOB NO.:	6050

SCALE

NONE

UNLESS OTHERWISE NOTED OR CHANGED BY REPRODUCTION

SHEET NO.

H-4.1

3/30/2022 11:39 AM W:\YEAR - 2018\18009.00 - TAUNTON WWTF UPGRADES\HVAC DEPARTMENT\PHASE 2\18009.00 HVAC FINAL CLARIFIERS & SECONDARY SLUDGE PS-PHASE 2.DWG (BETA STB BW.STB)

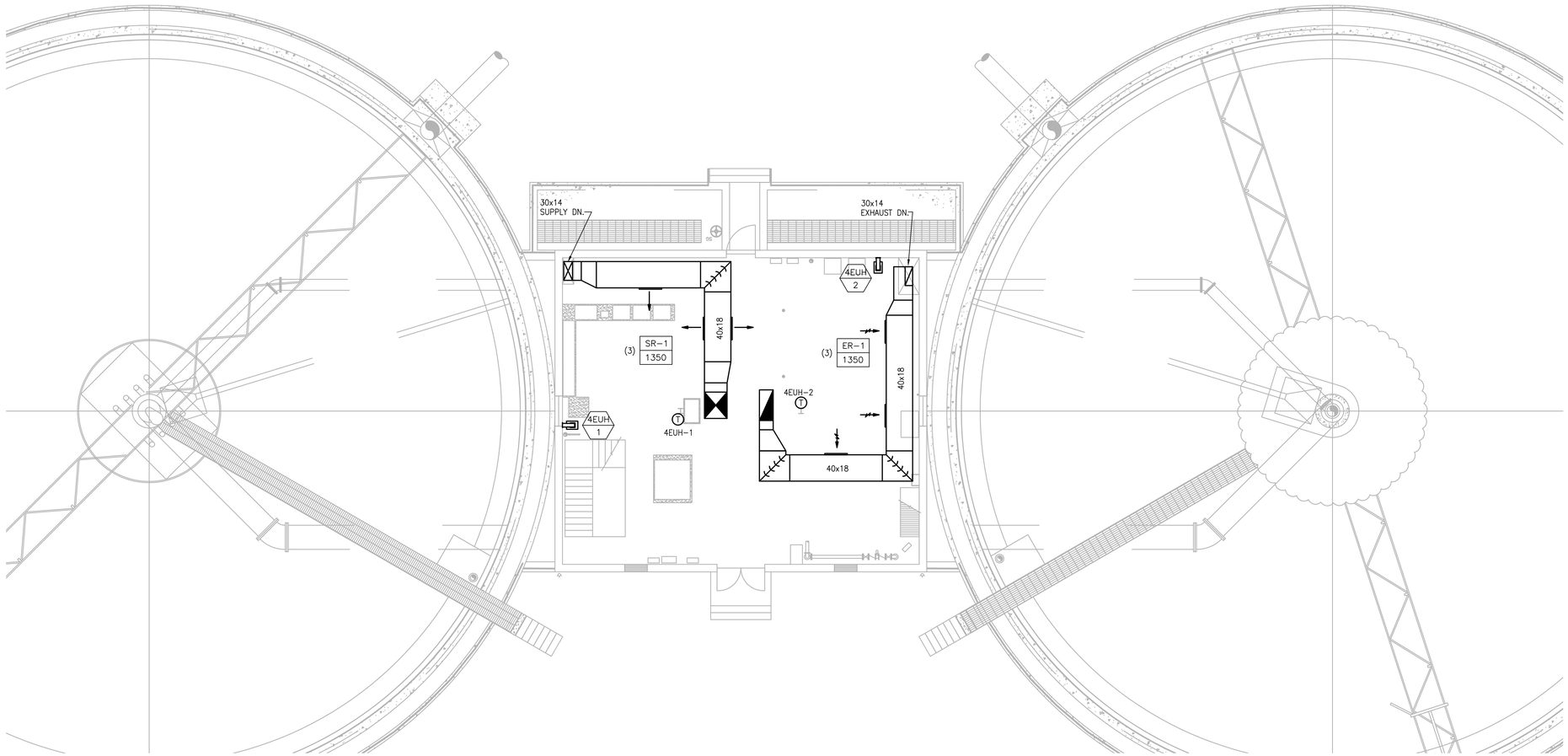

UPPER LEVEL PLAN

SCALE: 1/8"= 1'-0"

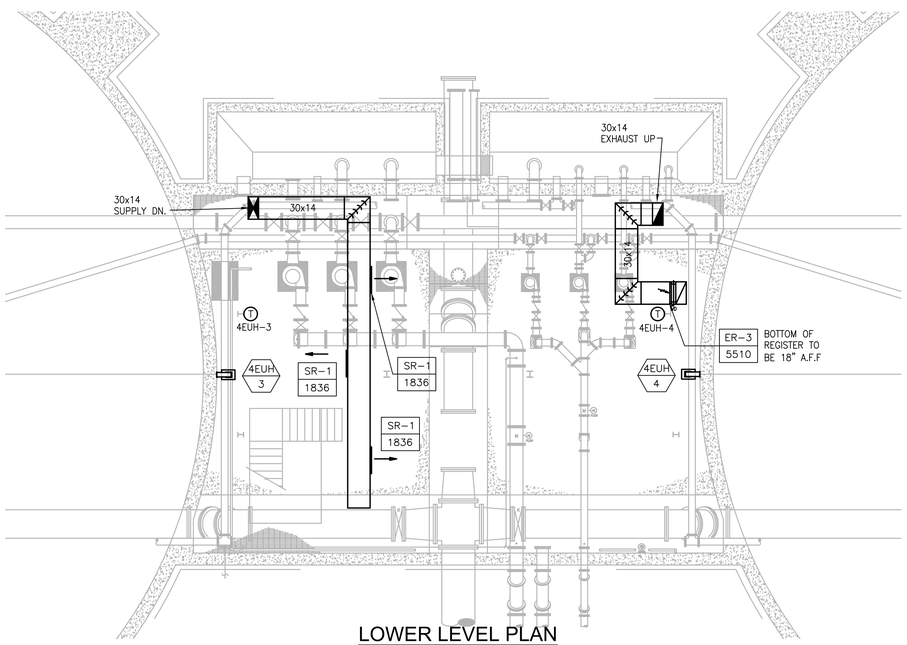

LOWER LEVEL PLAN

SCALE: 1/8"= 1'-0"

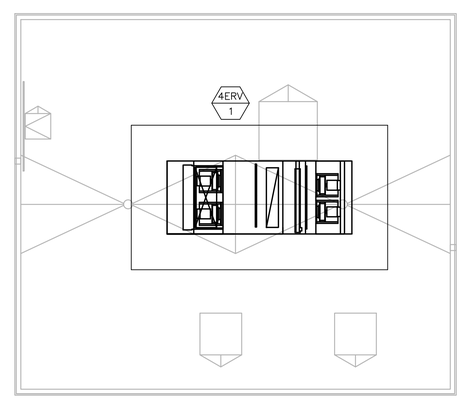

ROOF PLAN

SCALE: 1/8"= 1'-0"

PREPARED BY

BETA
www.BETA-Inc.com

REGISTERED PROFESSIONAL

COMMONWEALTH OF MASSACHUSETTS
RICHARD H. BROWN
MECHANICAL
NO. 45505
REGISTERED PROFESSIONAL ENGINEER

SUBCONSULTANT

SAR ENGINEERING, INC.

Mechanical/Electrical Engineers
150 Grossman Drive, Suite 309
Braintree, Massachusetts 02184
617 328-9215
web: www.sar.com

PROJECT

Taunton Wastewater Treatment Facility Improvements Phase 2

Taunton, MA

TITLE

HVAC Final Clarifiers No. 1 & 2 Plan & Sludge Pump Station No.1 Plan

NO.	REVISIONS	DATE

DRAWN BY:	RLB
DESIGNED BY:	RHB
CHECKED BY:	RHB
ISSUE DATE:	03/31/22
BETA JOB NO.:	6050

SCALE

NONE

UNLESS OTHERWISE NOTED OR CHANGED BY REPRODUCTION

SHEET NO.

H-4.2

3/30/2022 11:39 AM W:\YEAR - 2018\18009.00 - TAUNTON WWTF UPGRADES\HVAC DEPARTMENT\PHASE 2\18009.00 HVAC FINAL CLARIFIERS & SECONDARY SLUDGE PS-PHASE 2.DWG (BETA STB BW.STB)

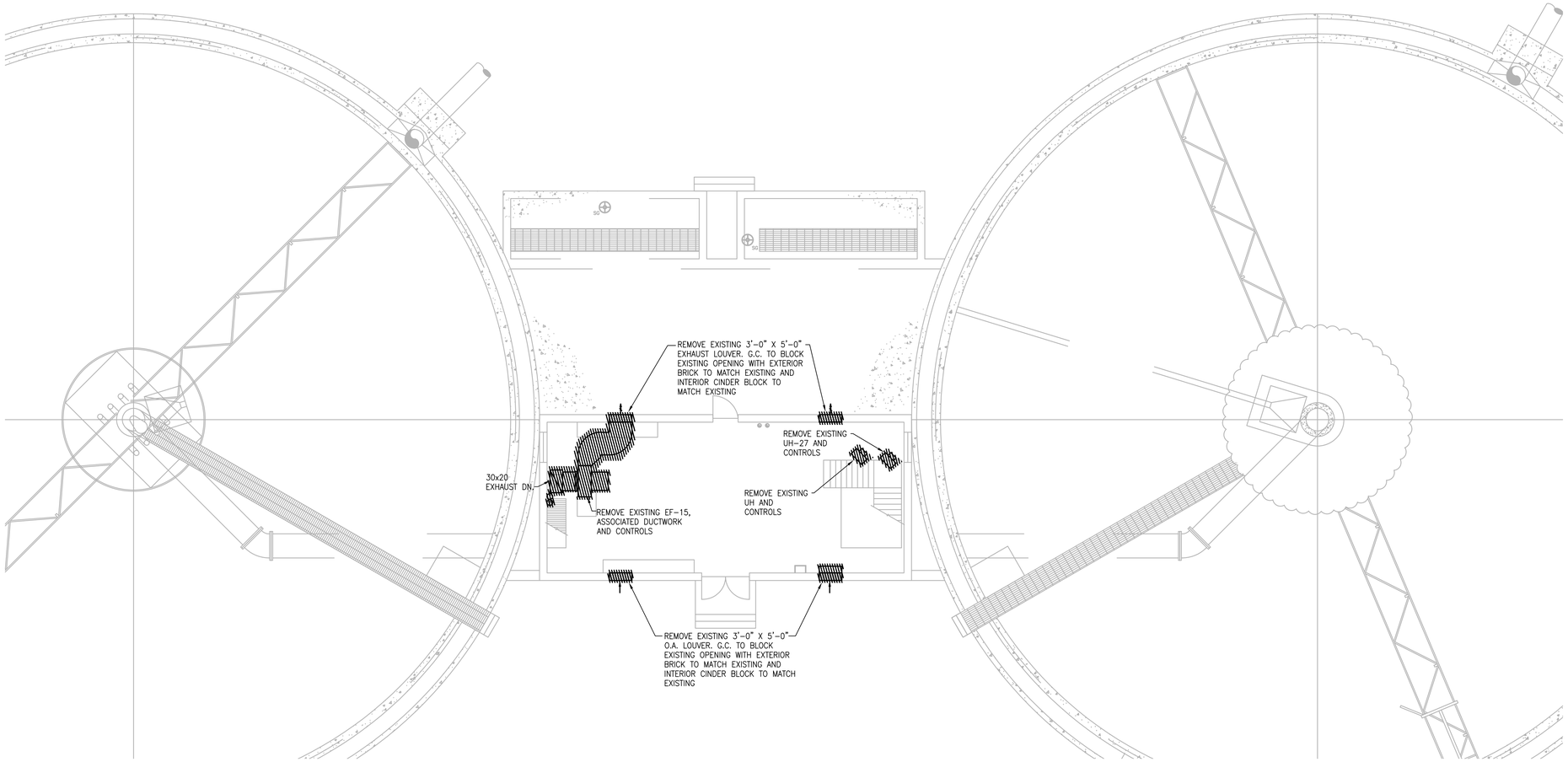

UPPER LEVEL PLAN

SCALE: 1/8"= 1'-0"

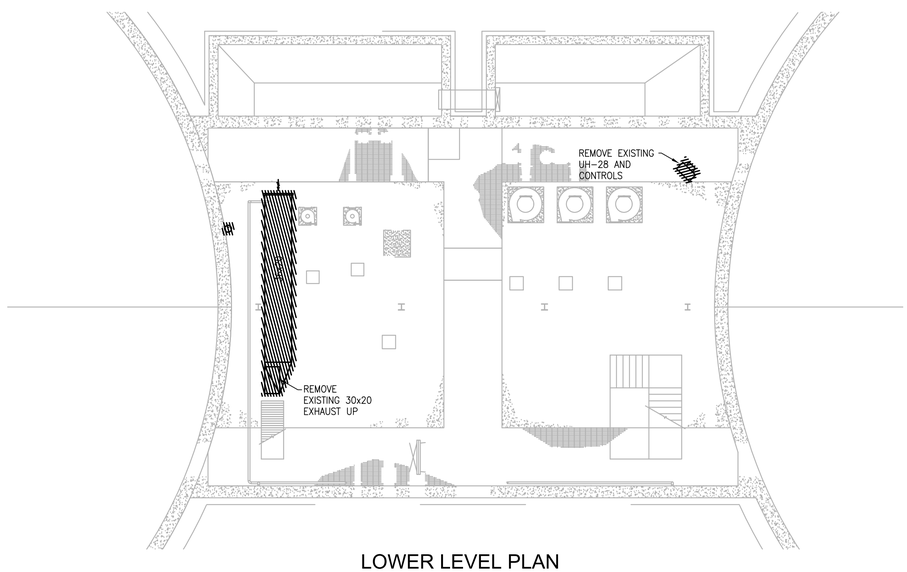

LOWER LEVEL PLAN

SCALE: 1/8"= 1'-0"

PREPARED BY

BETA
www.BETA-Inc.com

REGISTERED PROFESSIONAL

COMMONWEALTH OF MASSACHUSETTS
ROBERT H. BROWN
MECHANICAL
NO. 45505
REGISTERED PROFESSIONAL ENGINEER

SUBCONSULTANT

SAR ENGINEERING, INC.
Mechanical/Electrical Engineers
150 Grossman Drive, Suite 309
Braintree, Massachusetts 02184
617 328-9215
web: www.sar.com

PROJECT

Taunton Wastewater Treatment Facility Improvements Phase 2

Taunton, MA

TITLE

HVAC Demolition Final Clarifiers No. 3 & 4 Plan & Sludge Pump Station No.2 Plan

NO.	REVISIONS	DATE

DRAWN BY:	RLB
DESIGNED BY:	RHB
CHECKED BY:	RHB
ISSUE DATE:	03/31/22
BETA JOB NO.:	6050

SCALE

NONE

UNLESS OTHERWISE NOTED OR CHANGED BY REPRODUCTION

SHEET NO.

H-4.3

3/30/2022 11:39 AM W:\YEAR - 2018\18009.00 - TAUNTON WWTF UPGRADES\HVAC DEPARTMENT\PHASE 2\18009.00 HVAC FINAL CLARIFIERS & SECONDARY SLUDGE PS-PHASE 2.DWG (BETA STB BW.STB)

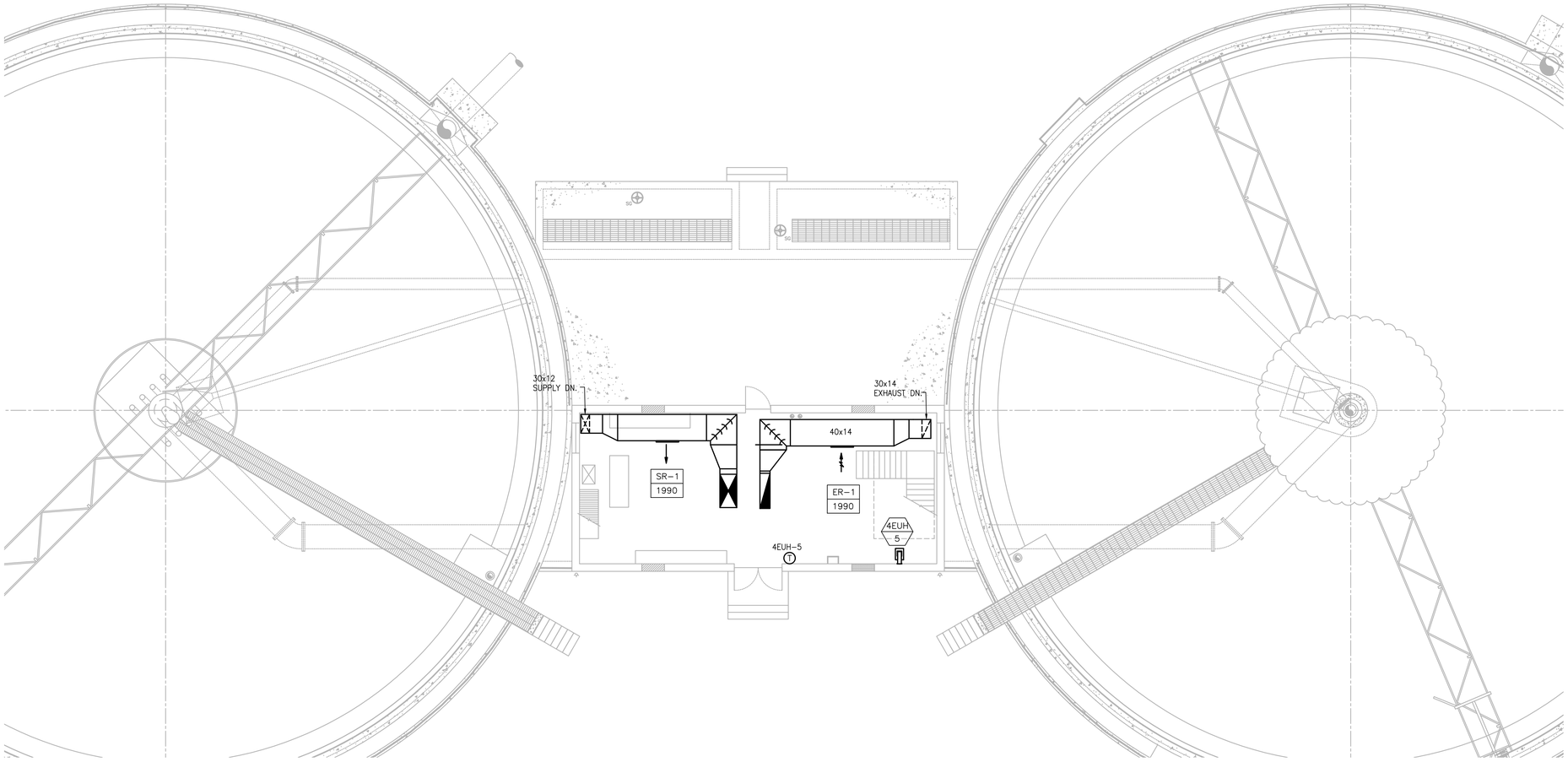

UPPER LEVEL PLAN

SCALE: 1/8"= 1'-0"

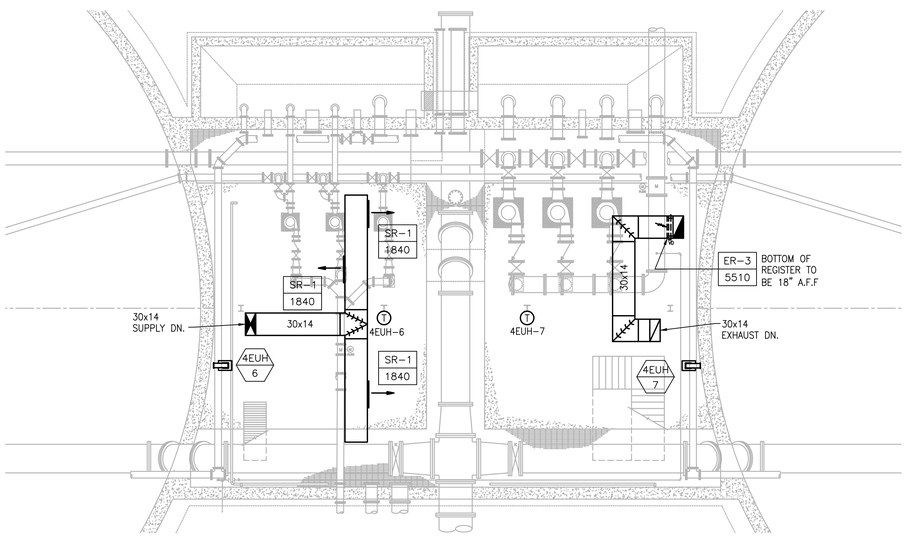

LOWER LEVEL PLAN

SCALE: 1/8"= 1'-0"

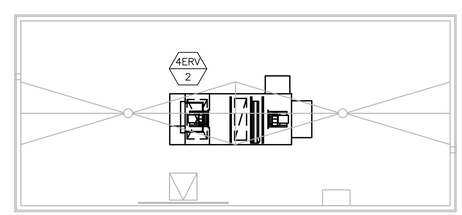

ROOF PLAN

SCALE: 1/8"= 1'-0"

PREPARED BY

BETA
www.BETA-Inc.com

REGISTERED PROFESSIONAL

NOT FOR CONSTRUCTION (CONCEPTUAL)

SUBCONSULTANT

SAR ENGINEERING, INC.

Mechanical/Electrical Engineers
150 Grossman Drive, Suite 309
Braintree, Massachusetts 02184
617 328-9215
web: www.sar.com

PROJECT

Taunton Wastewater Treatment Facility Improvements Phase 2

Taunton, MA

TITLE

HVAC Final Clarifiers No. 3 & 4 Plan & Sludge Pump Station No.2 Plan

NO.	REVISIONS	DATE

DRAWN BY:	RLB
DESIGNED BY:	RHB
CHECKED BY:	RHB
ISSUE DATE:	03/31/22
BETA JOB NO.:	6050

SCALE

NONE

UNLESS OTHERWISE NOTED OR CHANGED BY REPRODUCTION

SHEET NO.

H-4.4

3/30/2022 11:40 AM W:\YEAR - 2018\18009.00 - TAUNTON WWTF UPGRADES\HVAC DEPARTMENT\PHASE 2\18009.00 HVAC FINAL CLARIFIERS & SECONDARY SLUDGE PS-PHASE 2.DWG (BETA STB BW.STB)

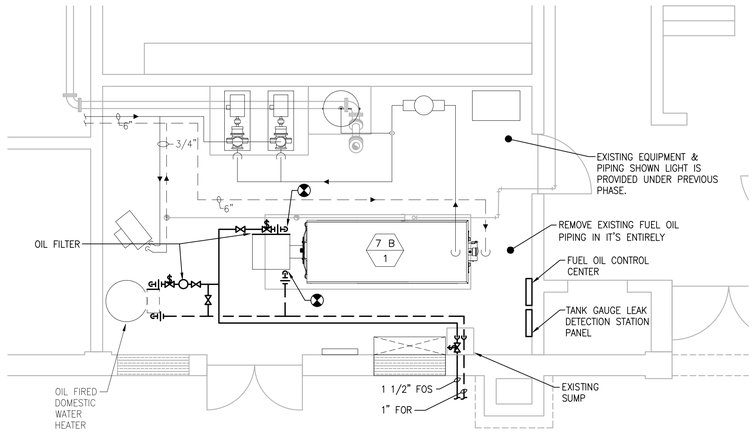

BOILER ROOM PART PLAN

SCALE: 1/4"= 1'-0"

PREPARED BY

BETA
www.BETA-Inc.com

REGISTERED PROFESSIONAL

COMMONWEALTH OF MASSACHUSETTS
ROBERT H. BROWN
MECHANICAL
NO. 45505
REGISTERED PROFESSIONAL ENGINEER

SUBCONSULTANT

SAR ENGINEERING, INC.

Mechanical/Electrical Engineers
150 Grossman Drive, Suite 309
Braintree, Massachusetts 02184
617 328-9215
web: www.sar.com

PROJECT

Taunton Wastewater Treatment Facility Improvements Phase 2

Taunton, MA

TITLE

HVAC
New Work
Solids Handling
Building
Boiler Room
Part Plan

NO.	REVISIONS	DATE

DRAWN BY:	RLB
DESIGNED BY:	RHB
CHECKED BY:	RHB
ISSUE DATE:	03/31/22
BETA JOB NO.:	6050

SCALE

AS SHOWN

UNLESS OTHERWISE NOTED OR CHANGED BY REPRODUCTION

SHEET NO.

H-7.1

3/30/2022 11:59 AM W:\YEAR - 2018\18009.00 - TAUNTON WWTF UPGRADES\HVAC DEPARTMENT\PHASE 2\18009.00 HVAC SOLIDS HANDLING BUILDING-PHASE 2.DWG (BETA STB BW.STB)

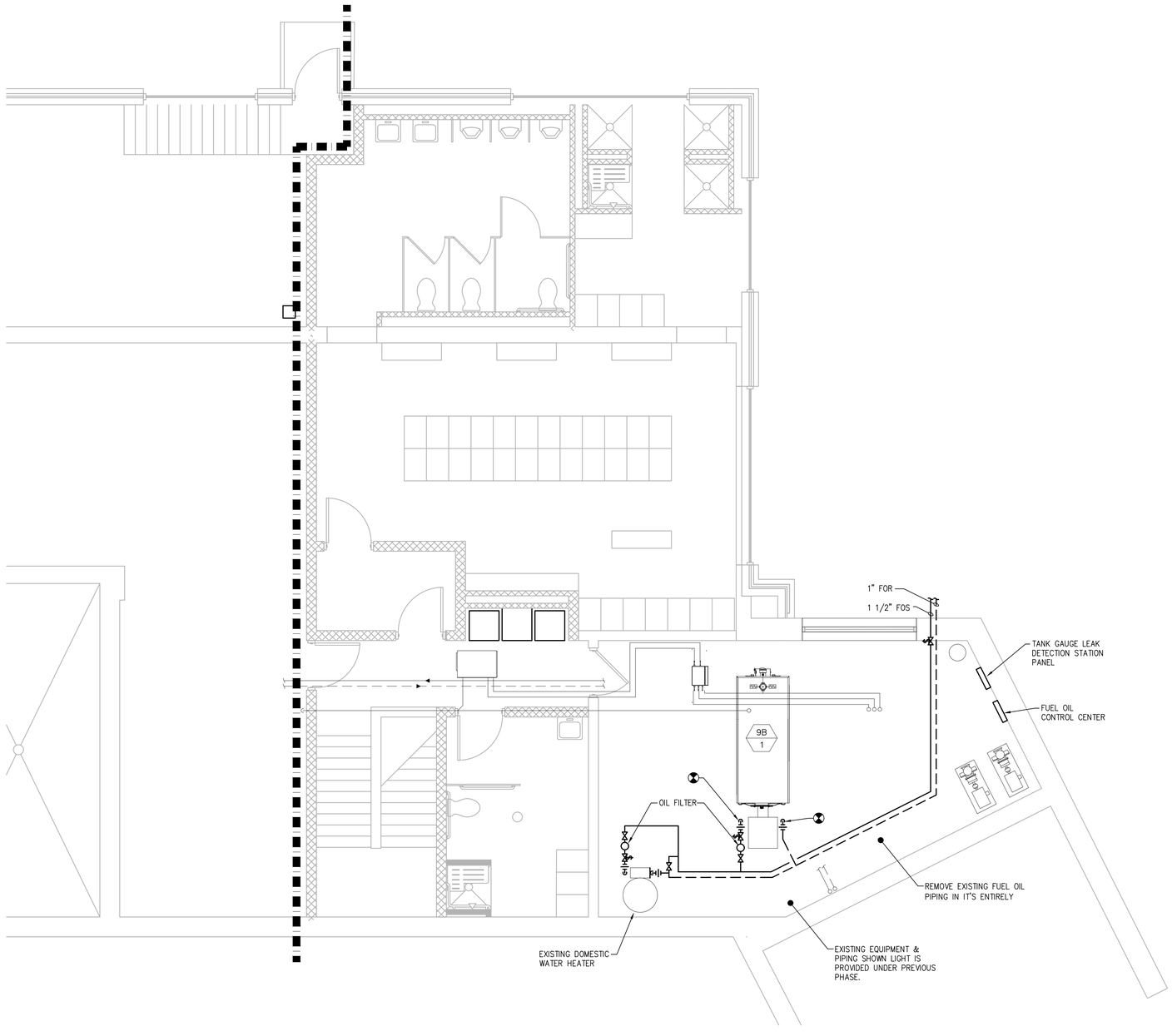

BASEMENT FLOOR - PLAN

SCALE: 1/8"= 1'-0"

PREPARED BY

BETA
www.BETA-Inc.com

REGISTERED PROFESSIONAL

COMMONWEALTH OF MASSACHUSETTS
ROBERT H. BROWN
MECHANICAL
NO. 45505
REGISTERED PROFESSIONAL ENGINEER

SUBCONSULTANT

SAR ENGINEERING, INC.

Mechanical/Electrical Engineers
150 Grossman Drive, Suite 309
Braintree, Massachusetts 02184
617 328-9215
web: www.sar.com

PROJECT

Taunton Wastewater Treatment Facility Improvements Phase 2

Taunton, MA

TITLE

HVAC Administration Building Fuel Oil Plan

NO.	REVISIONS	DATE

DRAWN BY:	RLB
DESIGNED BY:	RHB
CHECKED BY:	RHB
ISSUE DATE:	03/31/22
BETA JOB NO.:	6050

SCALE

AS SHOWN

UNLESS OTHERWISE NOTED OR CHANGED BY REPRODUCTION

SHEET NO.

H-9.1

3/30/2022 11:46 AM W:\YEAR - 2018\18009.00 - TAUNTON WWTF UPGRADES\HVAC DEPARTMENT\PHASE 2\18009.00 HVAC CONTROL-ADMIN BUILDING-PHASE 2.DWG (BETA.STB BW.STB)

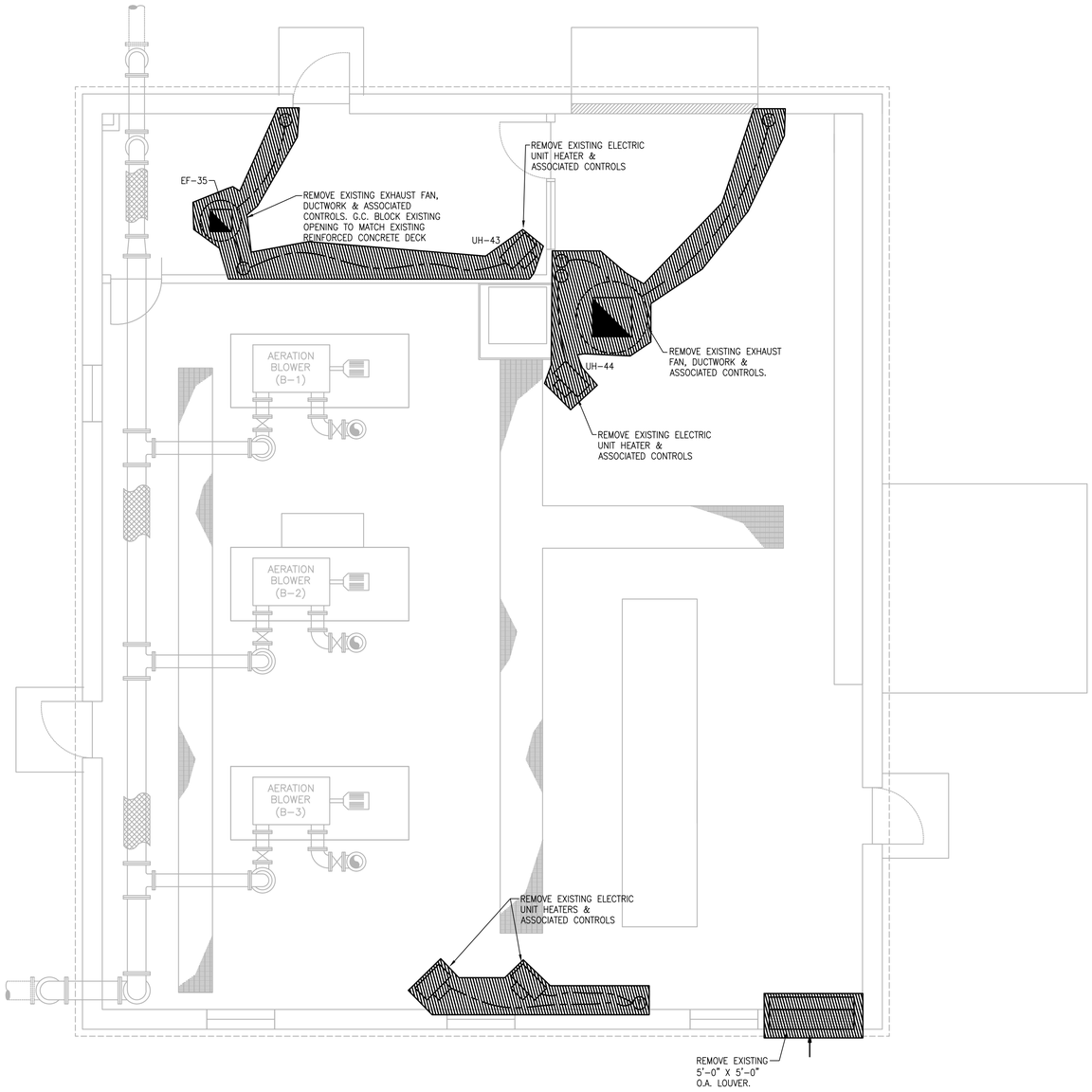

PLAN

SCALE: 1/4"= 1'-0"

PREPARED BY

BETA
www.BETA-Inc.com

REGISTERED PROFESSIONAL

COMMONWEALTH OF MASSACHUSETTS
ROBERT H. BROWN
MECHANICAL
NO. 45505
REGISTERED PROFESSIONAL ENGINEER

SUBCONSULTANT

SAR ENGINEERING, INC.
Mechanical/Electrical Engineers
150 Grossman Drive, Suite 309
Braintree, Massachusetts 02184
617 328-9215
web: www.sar.com

PROJECT

Taunton Wastewater Treatment Facility Improvements Phase 2

Taunton, MA

TITLE

HVAC Demolition Storage Building Plan

NO.	REVISIONS	DATE

DRAWN BY:	RLB
DESIGNED BY:	RHB
CHECKED BY:	RHB
ISSUE DATE:	03/31/22
BETA JOB NO.:	6050

SCALE

AS SHOWN

UNLESS OTHERWISE NOTED OR CHANGED BY REPRODUCTION

SHEET NO.

H-9.11

3/30/2022 11:58 AM W:\YEAR - 2018\18009.00 - TAUNTON WWTF UPGRADES\HVAC DEPARTMENT\PHASE 2\18009.00 HVAC STORAGE BUILDING-PHASE 2.DWG (BETA STB BW.STB)

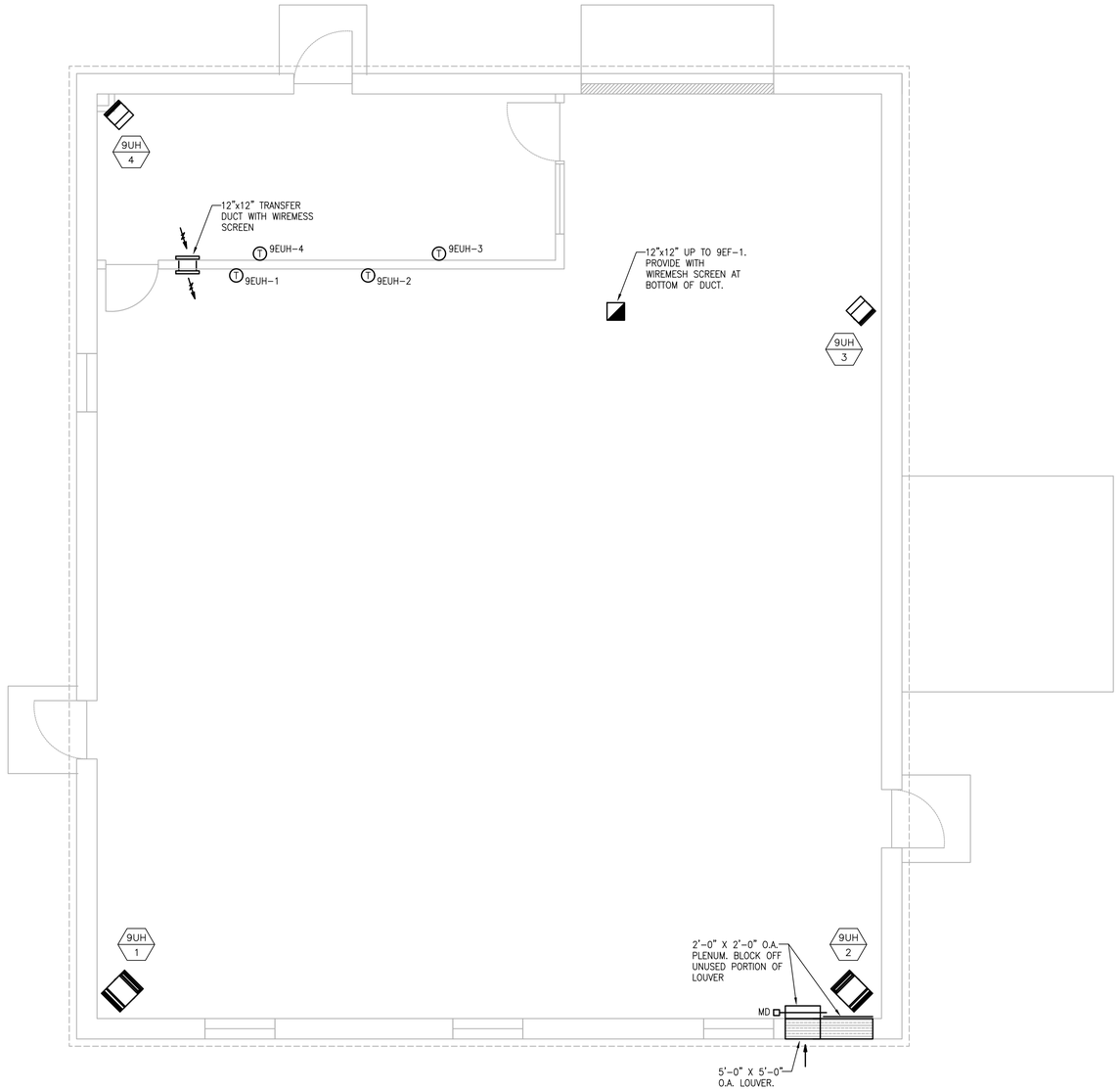

PLAN

SCALE: 1/4"= 1'-0"

PREPARED BY

BETA
www.BETA-Inc.com

REGISTERED PROFESSIONAL

COMMONWEALTH OF MASSACHUSETTS
ROBERT H. BROWN
MECHANICAL
NO. 45555
REGISTERED PROFESSIONAL ENGINEER

SUBCONSULTANT

SAR
ENGINEERING, INC.

Mechanical/Electrical Engineers
150 Grossman Drive, Suite 309
Braintree, Massachusetts 02184
617.328.9215
web: www.sar.com

PROJECT

Taunton Wastewater Treatment Facility Improvements Phase 2

Taunton, MA

TITLE

HVAC Storage Building Plan

NO.	REVISIONS	DATE

DRAWN BY:	RLB
DESIGNED BY:	RHB
CHECKED BY:	RHB
ISSUE DATE:	03/31/22
BETA JOB NO.:	6050

SCALE

AS SHOWN

UNLESS OTHERWISE NOTED OR CHANGED BY REPRODUCTION

SHEET NO.

H-9.3

3/30/2022 12:04 PM W:\YEAR - 2018\18009.00 - TAUNTON WWTF UPGRADES\HVAC DEPARTMENT\PHASE 2\18009.00 HVAC STORAGE BUILDING-PHASE 2.DWG (BETA STB BW.STB)

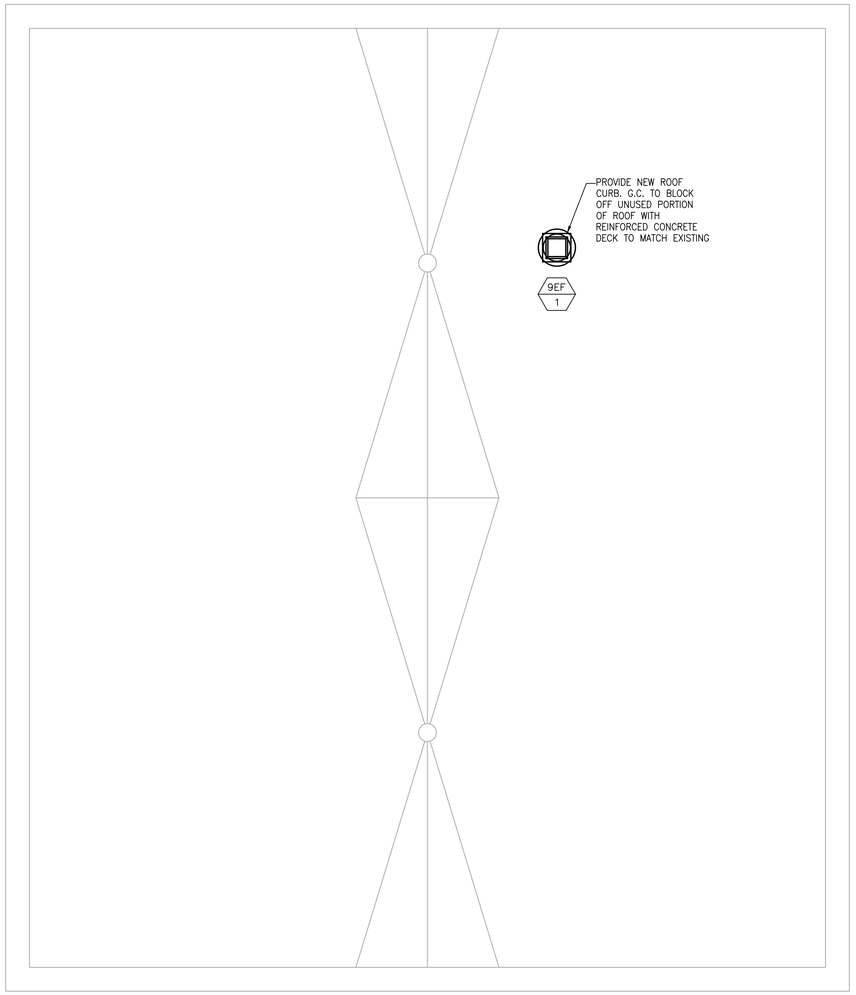

PLAN

SCALE: 1/4"= 1'-0"

PREPARED BY

BETA

www.BETA-Inc.com

REGISTERED PROFESSIONAL

SUBCONSULTANT

SAR ENGINEERING, INC.

Mechanical/Electrical Engineers
150 Grossman Drive, Suite 309
Braintree, Massachusetts 02184
617 328-9215
web: www.sar.com

PROJECT

Taunton Wastewater Treatment Facility Improvements Phase 2

Taunton, MA

TITLE

HVAC Storage Building Roof Plan

NO.	REVISIONS	DATE

DRAWN BY:	RLB
DESIGNED BY:	RHB
CHECKED BY:	RHB
ISSUE DATE:	03/31/22
BETA JOB NO.:	6050

SCALE

AS SHOWN

UNLESS OTHERWISE NOTED OR CHANGED BY REPRODUCTION

SHEET NO.

H-9.4

3/30/2022 11:59 AM W:\YEAR - 2018\18009.00 - TAUNTON WWTF UPGRADES\HVAC DEPARTMENT\PHASE 2\18009.00 HVAC STORAGE BUILDING-PHASE 2.DWG (BETA STB BW.STB)

PLUMBING NOTES

1. THE WORK COVERED CONSISTS OF FURNISHING ALL LABOR AND MATERIALS NECESSARY TO INSTALL, COMPLETE AND READY FOR CONTINUOUS OPERATION, THE PLUMBING SYSTEMS, APPARATUS AND EQUIPMENT FOR THIS PROJECT.
2. ALL EQUIPMENT AND MATERIALS FURNISHED UNDER THE PLUMBING SUB-CONTRACT, LABOR AND TESTING PERFORMED HEREIN SHALL BE IN COMPLETE ACCORDANCE WITH THE STATE BUILDING CODE, LOCAL FUEL GAS AND PLUMBING CODES, ALL LOCAL CODES AND REGULATIONS, NATIONAL FIRE PROTECTION ASSOCIATION, INSURANCE REGULATIONS AND REQUIREMENTS GOVERNING SUCH WORK.
3. ANY AND ALL PERMITS REQUIRED FOR INSTALLATION OF ANY MATERIAL SHALL BE OBTAINED AS PART OF THE WORK OF THE SPECIFICATION INCLUDING ALL FEES OR EXPENSES INCURRED.
4. FOR PLUMBING SCHEDULES, REFER TO DRAWING P-0.2
5. FOR PLUMBING DETAILS, REFER TO DRAWINGS P-0.3
6. ALL PRODUCTS USED AS PART OF THE POTABLE WATER SYSTEM WHERE THE INTENDED PURPOSE IS TO DELIVER OR CONVEY POTABLE WATER FOR HUMAN CONSUMPTION SHALL BE LEAD FREE AND CONFORM TO THE LATEST "LEAD FREE" LAW.
7. WHERE WATER PIPING IS SHOWN DROPPING INTO PLUMBING CHASES WITH SIZES NOTED, THAT SIZE SHALL BE CARRIED FULL LENGTH THROUGH THE CHASE. REFER TO PLUMBING FIXTURE SCHEDULE ON THIS DRAWING FOR INDIVIDUAL FIXTURE CONNECTION SIZES.
8. UNLESS OTHERWISE NOTED, ALL HORIZONTAL DRAINAGE PIPING WHICH IS 3" OR LESS IN DIAMETER SHALL PITCH OF NOT LESS THAN 1/4" PER FOOT AND ALL HORIZONTAL DRAINAGE PIPING WHICH IS 4" OR LARGER IN DIAMETER SHALL PITCH OF NOT LESS THAN 1/8" PER FOOT.
9. ALL BELOW FLOOR PIPING THAT INTERSECTS A GRADE BEAM REQUIRES COORDINATION WITH STRUCTURAL.
10. PROVIDE ALL FLOOR CLEANOUTS WITH HUB AND SPIGOT; LEAD AND OAKUM JOINTS FROM CLEANOUT TO AND INCLUDING CONNECTION TO SANITARY OR STORM DRAIN.
11. REFER TO ARCHITECTURAL PLANS FOR EXACT LOCATION AND HEIGHT OF ALL PLUMBING FIXTURES.
12. MISCELLANEOUS DISCREPANCIES OR OMISSIONS WHICH MIGHT APPEAR ON THE PLANS OR SPECIFICATIONS WILL NOT RELIEVE THE PLUMBING SUB-CONTRACTOR OF CODE COMPLIANCE.
13. ALL FLOOR DRAINS SHALL BE PROVIDED WITH A TRAP PRIMER CONNECTION. CONTRACTOR SHALL PROVIDE ALL ASSOCIATED EQUIPMENT NECESSARY TO PROVIDE A COMPLETE SYSTEM.
14. PROVIDE CLEANOUTS AT ALL CHANGE OF DIRECTIONS FOR STORM AND SANITARY/WASTE PIPING.
15. PROVIDE DANDY CLEANOUTS AT ALL EXPOSED STORM AND SANITARY/WASTE PIPING 18 INCHES (APPROXIMATELY) ABOVE FINISHED FLOOR WHERE PIPING GOES BELOW FINISHED FLOOR/GRADE.
16. PROVIDE WALL CLEANOUTS WITH ACCESS PANELS AT ALL STORM AND SANITARY/WASTE PIPING WITHIN PIPE CHASES OR WALLS.
17. HANDICAPPED ACCESSIBLE FIXTURES SHALL BE IN ACCORDANCE WITH THE AMERICANS WITH DISABILITIES ACT ACCESSIBILITY GUIDELINES FOR BUILDINGS AND FACILITIES AND THE RULES AND REGULATIONS OF THE MASSACHUSETTS ARCHITECTURAL ACCESS BOARD. WHERE THE TWO STANDARDS DIFFER, THE MORE STRINGENT SHALL APPLY.
18. ALL INTERIOR BURIED DOMESTIC WATER PIPING, NON-POTABLE WATER PIPING, TEMPERED WATER PIPING OR AIR PIPING SHALL BE SOFT ROLLED "K" COPPER COIL AND BE PROTECTED WITH A HIGH DENSITY RUBBER INSULATION. FITTINGS SHALL NOT BE PERMITTED IN OR UNDER SLAB. PROVIDE SLAB PENETRATIONS WITH SLEEVE AND FIRE STOPPING.
19. RISER DIAGRAMS ARE SHOWN TO INDICATE PIPE SIZES ONLY AND ARE NOT INTENDED TO SHOW EVERY OFFSET OR FITTING. FOR FIXTURE CONNECTION SIZES, REFER TO PLUMBING FIXTURE SCHEDULE ON PLUMBING DRAWING P0.1. IF ACCESS PANELS ARE REQUIRED; LOCATE BENEATH COUNTER TOPS IN AN ACCESSIBLE LOCATION WHICH SHALL NOT INTERFERE WITH OTHER PIPING. WHERE CONFLICTS IN PIPE SIZES OCCUR BETWEEN FLOOR PLANS AND RISER DIAGRAMS, THE LARGER PIPE SIZE SHALL PREVAIL.

PLUMBING LEGEND

SYMBOL	ABBREVIATION	DESCRIPTION
	ETR	LIGHT LINE INDICATES EXISTING PIPING TO REMAIN
	RE	REMOVE EXISTING PIPING
	CTE	CONNECT TO EXISTING
	C&C	CUT & CAP
		BELOW FLOOR PIPING (INDICATED AS DOUBLE LINEWORK)
	CW	COLD WATER
	HW	HOT WATER
	HWR	HOT WATER RECIRCULATION
	S or W	SOIL OR WASTE
	V	VENT
	RW	RAIN WATER CONDUCTOR
OFD	OFD	STORM WATER OVER FLOW DRAINAGE
G	G	NATURAL GAS
PD	PD	PUMPED DISCHARGE
	HTI / TMC	HEAT TRACE AND INSULATE
	CONT	CONTINUATION
	UP	PIPE RISE OR UP
	DP OR DN	PIPE DROP OR DOWN
	TEE	PIPE TEE
	SOV	SHUT-OFF VALVE
		GAS COCK
		SOLENOID VALVE
	VIV	VALVE IN VERTICAL
	CV	CHECK VALVE
	BVA	BALANCING VALVE ASSEMBLY
	W & T	WASTE & TRAP
	OED	OPEN END DRAIN WITH BACKWATER VALVE
	CO	CLEANOUT PLUG
	FCO	FLUSH FLOOR CLEANOUT
	GCO	GRADE CLEANOUT
	DCO	DANDY CLEANOUT
		CAPPED PIPE
		ARROW INDICATES DIRECTION OF FLOW
.01		ARROW INDICATES DIRECTION OF SLOPE
		UNION
	WTS	WATERTIGHT SLEEVE
TP	TP	TRAP PRIMER
	HB	HOSE BIBB
	WH	WALL HYDRANT
1 / P-1		DIAGRAM NO. & DWG. NO. REFERENCE
	FD "A"	FLOOR DRAIN & TYPE
	RD "A"	ROOF DRAIN & TYPE
	RPBP	REDUCED PRESSURE BACKFLOW PREVENTER
WM	WM	WATER METER
GM	GM	GAS METER
CO	CO	CARBON MONOXIDE DETECTOR
	T	THERMOMETER
	PG	PRESSURE GAUGE WITH PETCOCK
	T&P	TEMPERATURE AND PRESSURE RELIEF VALVE
	SA	SHOCK ABSORBER
		VACUUM RELIEF VALVE

PLUMBING LEGEND

SYMBOL	ABBREVIATION	DESCRIPTION
	WH-1	WATER HEATER & NUMBER
	SS	SOIL STACK
	VS	VENT STACK
	VTR	VENT THRU ROOF
	INV	INVERT
	TMV	THERMOSTATIC MIXING VALVE
	TW	TEMPERED WATER (70°F)
	TYP	TYPICAL
	NTS	NOT TO SCALE
	AFF	ABOVE FINISHED FLOOR
	LPC	LIMIT OF PLUMBING CONTRACT
	GC	GENERAL CONTRACTOR
	FPC	FIRE PROTECTION CONTRACTOR
	PC	PLUMBING CONTRACTOR
	EC	ELECTRICAL CONTRACTOR
	HVAC	HVAC CONTRACTOR
	LPC	LIMIT OF PLUMBING CONTRACT
	WC	WATER CLOSET
	UR	URINAL
	LAV	LAVATORY
	MR	MOP RECEPTOR
	SHR	SHOWER
	DF	DRINKING FOUNTAIN
	SK	SINK
	F & I	FURNISH & INSTALL
	S=.01	SLOPE = 1/8" PER FOOT
	S=.02	SLOPE = 1/4" PER FOOT
	NO	NORMALLY OPEN
	NC	NORMALLY CLOSED
	F.F.E.	FINISHED FLOOR ELEVATION
	RL	RAIN LEADER

PREPARED BY

BETA
www.BETA-Inc.com

REGISTERED PROFESSIONAL

JAMES A. LUCE
PLUMBING
No. 33893
REGISTERED PROFESSIONAL ENGINEER
COMMONWEALTH OF MASSACHUSETTS

SUBCONSULTANT

SAR ENGINEERING, INC.
Mechanical/Electrical Engineers
150 Grossman Drive, Suite 309
Braintree, Massachusetts 02184
617 328-9215
web: www.sar.com

PROJECT

Taunton Wastewater Treatment Facility Improvements Phase 2

Taunton, MA

TITLE

Plumbing Legend and General Notes

NO.	REVISIONS	DATE

DRAWN BY:	RLB
DESIGNED BY:	JL
CHECKED BY:	JL
ISSUE DATE:	03/31/22
BETA JOB NO.:	6050

SCALE

NONE

UNLESS OTHERWISE NOTED OR CHANGED BY REPRODUCTION

SHEET NO.

P-0.1

3/30/2022 12:06 PM W:\YEAR - 2018\18009.00 - TAUNTON WWTF UPGRADES\PLUMBING DEPARTMENT\PHASE 2\18009.00 PLUMBING LEGEND SCHEDULES DETAILS PHASE 2.DWG (BETA STB BW.STB)

PLUMBING FIXTURE SCHEDULE

DESIGNATION	FIXTURE DESCRIPTION	CONNECTION SIZE							REMARKS
		W1	HW1	BLW	SAN	V	NPW1	NPHW1	
HB-1	HOSE BIBB	1/2"	–	–	–	–	–	–	–
HB-2	HOSE BIBB	1"	–	–	–	–	–	–	–

SUMP PUMP SCHEDULE

DESIGNATION	LOCATION	MODEL	CAPACITY (GPM)	HEAD (FEET)	TYPE	ELECTRICAL REQUIREMENTS				REMARKS
						RPM	HP	VOLTS	Φ	
4SP-1	SLUDGE PUMP STATION NO.1 PLAN	WEIL 2443	20	40	DUPLEX SUBMERSIBLE	1750	1/2	480	3	AUTOMATIC WITH FLOAT
4SP-2	SLUDGE PUMP STATION NO.1 PLAN	WEIL 2443	20	40	DUPLEX SUBMERSIBLE	1750	1/2	480	3	AUTOMATIC WITH FLOAT

SHOCK ABSORBER SCHEDULE

PDI RATING SYMBOL	A	B	C	D	E
PRECISION PLUMBING PRODUCTS	SC-500	SC-750	SC-1000	SC-1250	SC-1500
WATTS REGULATOR COMPANY	0750030	0750053	0750060	0750070	0750090
WADE	5-P	10-P	20-P	50-P	75-P

* MANUFACTURERS NAMES AND MODEL NUMBERS ARE SHOWN ONLY TO REPRESENT TYPE, STYLE AND LEVEL OF QUALITY EXPECTED, REFER TO SPECIFICATIONS FOR ACCEPTABLE EQUAL MANUFACTURERS.

DRAIN SCHEDULE

DESIGNATION	TYPE	MANUFACTURER	MODEL	OUTLET	STRAINER	REMARKS
RD'A'	RD	ZURN	Z121	NO HUB	CAST IRON DOME	REPLACE DRAIN TO ACCOMMODATE NEW ROOF

* ALL FLOOR DRAINS SHALL BE PROVIDED WITH AUTOMATIC TRAP PRIMERS. REFER TO DETAIL FOR PIPING ARRANGEMENT.
* MANUFACTURERS NAMES AND MODEL NUMBERS ARE SHOWN ONLY TO REPRESENT TYPE, STYLE AND LEVEL OF QUALITY EXPECTED, REFER TO SPECIFICATIONS FOR ACCEPTABLE EQUAL MANUFACTURERS.

PREPARED BY

BETA
www.BETA-Inc.com

REGISTERED PROFESSIONAL

COMMONWEALTH OF MASSACHUSETTS
JAMES A. LUCE
PLUMBING
No. 33893
REGISTERED PROFESSIONAL ENGINEER

SUBCONSULTANT

SAR
ENGINEERING, INC.
Mechanical/Electrical Engineers
150 Grossman Drive, Suite 309
Braintree, Massachusetts 02184
617.328.9215
web: www.sar.com

PROJECT

Taunton Wastewater Treatment Facility Improvements Phase 2

Taunton, MA

TITLE

Plumbing Schedules

NO.	REVISIONS	DATE

DRAWN BY:	RLB
DESIGNED BY:	RHB
CHECKED BY:	RHB
ISSUE DATE:	03/31/22
BETA JOB NO.:	6050

SCALE

NONE

UNLESS OTHERWISE NOTED OR CHANGED BY REPRODUCTION

SHEET NO.

P-0.2

3/30/2022 12:08 PM W:\YEAR - 2018\18009.00 - TAUNTON WWTF UPGRADES\PLUMBING DEPARTMENT\PHASE 2\18009.00 PLUMBING LEGEND SCHEDULES DETAILS PHASE 2.DWG (BETA STB BW.STB)

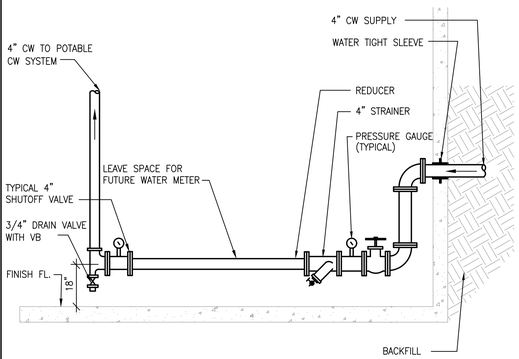

1 DOMESTIC WATER METER DETAIL

NTS

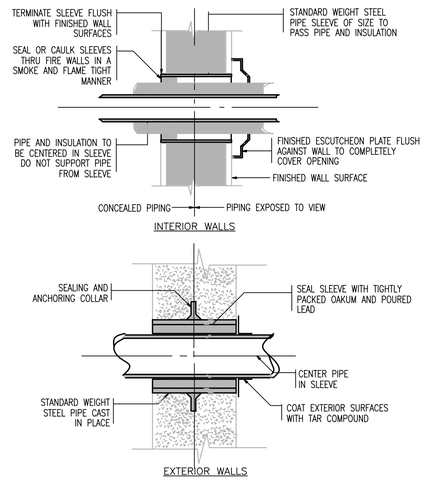

2 PIPING SLEEVE DETAIL

NTS

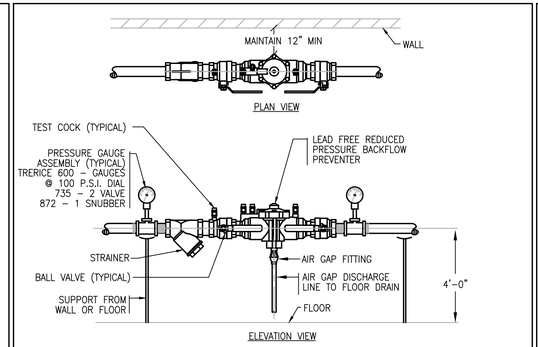

NOTES:

1. BACKFLOW PREVENTER SHALL BE APPROVED BY THE DEPARTMENT OF ENVIRONMENTAL PROTECTION AGENCY.
2. BACKFLOW PREVENTER SHALL BE IN COMPLETE ACCORDANCE WITH AUTHORITIES HAVING JURISDICTION. THE PLUMBING CONTRACTOR SHALL SUBMIT PLANS AND DEVICE INFORMATION FOR APPROVAL PRIOR TO INSTALLATION.
3. FURNISH TO OWNER ONE TEST KIT AND SPARE PARTS KIT FOR EACH DEVICE.
4. THIS CONTRACTOR SHALL ACT AS THE OWNERS AGENT IN SEEKING APPROVAL FROM ALL LOCAL AND STATE AUTHORITIES. THIS CONTRACTOR SHALL SUBMIT ALL PLANS, SPECS. AND APPLICATIONS REQUIRED FOR APPROVAL AND PAY ALL FEES.
5. SEE FLOOR PLANS FOR SIZES.
6. MAINTAIN 1'-0" CLEARANCE FROM WALL.

3 RPZ BACKFLOW PREVENTER DETAIL

NTS

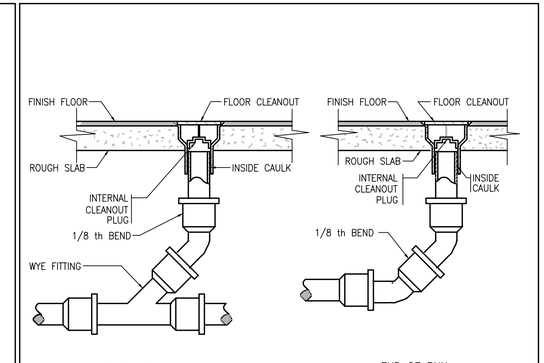

NOTE:

1. ALL COVERS IN TILE FLOORS SHALL BE RECESSED TYPE TO RECEIVE TILE.

4 FLOOR CLEANOUT DETAIL

NTS

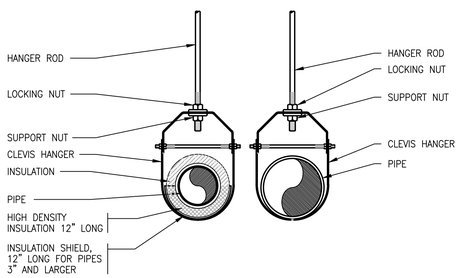

HANGER ROD SCHEDULE	
PIPE SIZE	ROD SIZE
UP TO 2"	3/8" DIA.
2 1/2" THRU 3"	1/2" DIA.
4" AND 5"	5/8"
6" THRU 8"	3/4"
12"	7/8"

HANGER ROD SPACING	
PIPE SIZE	MAX. ALLOWABLE SPACING
1"	7'
1 1/4"	8'
1 1/2"	9'
2"	10'
2 1/2"	11'
3" THRU 8"	12'
10" & 12"	15"

INSULATED AND NON INSULATED PLUMBING SYSTEMS

5 CLEVIS PIPE HANGER DETAIL

NTS

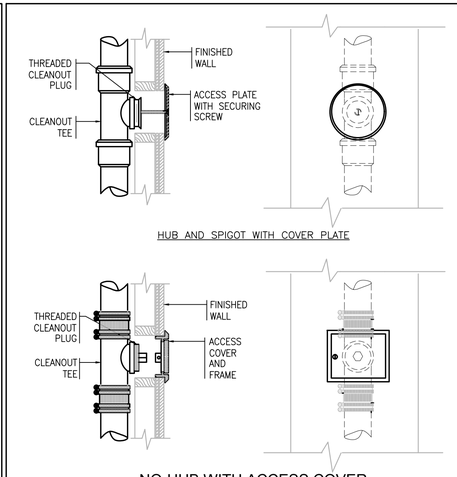

6 WALL CLEANOUTS DETAIL

NTS

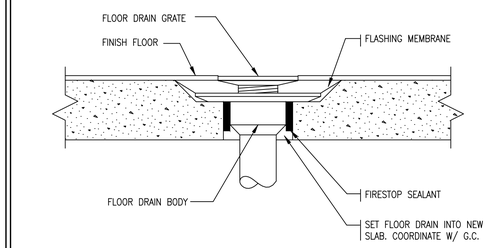

9 FLOOR DRAIN INSTALLATION

NTS

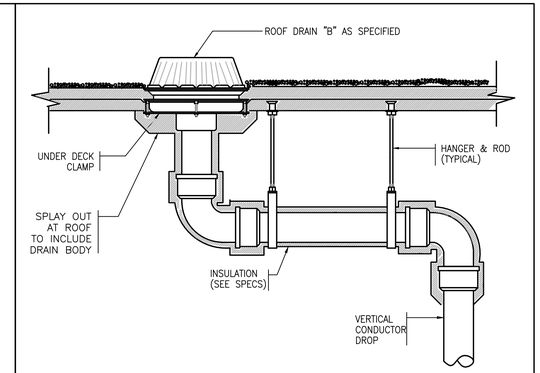

10 ROOF DRAIN DETAIL

NTS

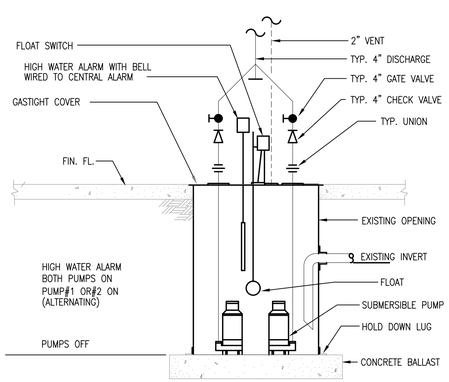

11 DUPLEX SEWAGE EJECTOR DIAGRAM

NTS

PREPARED BY

BETA
www.BETA-Inc.com

REGISTERED PROFESSIONAL

JAMES A. LUCE PLUMBING No. 33893 REGISTERED PROFESSIONAL ENGINEER

SUBCONSULTANT

SAR ENGINEERING, INC.

Mechanical/Electrical Engineers
150 Grossman Drive, Suite 309
Braintree, Massachusetts 02184
617 328-9215
web: www.sar.com

PROJECT

Taunton Wastewater Treatment Facility Improvements Phase 2

Taunton, MA

TITLE

Plumbing Details

NO.	REVISIONS	DATE

DRAWN BY:	RLB
DESIGNED BY:	RHB
CHECKED BY:	RHB
ISSUE DATE:	03/31/22
BETA JOB NO.:	6050

SCALE

NONE

UNLESS OTHERWISE NOTED OR CHANGED BY REPRODUCTION

SHEET NO.

P-0.3

3/30/2022 12:18 PM W:\YEAR - 2018\18009.00 - TAUNTON WWTF UPGRADES\PLUMBING DEPARTMENT\PHASE 2\18009.00 PLUMBING LEGEND SCHEDULES DETAILS PHASE 2.DWG (BETA STB BW.STB)

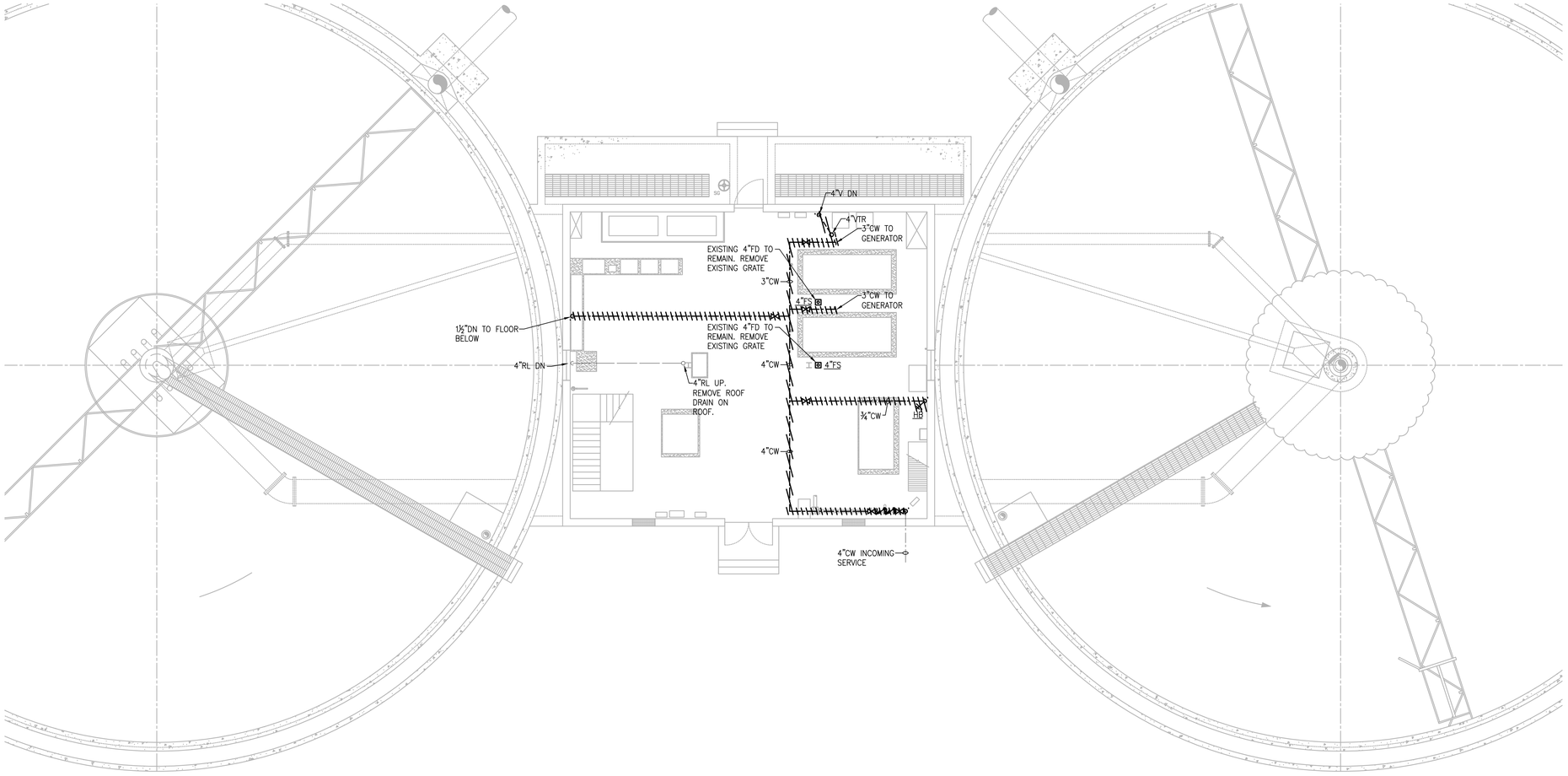

UPPER LEVEL PLAN

SCALE: 1/8"= 1'-0"

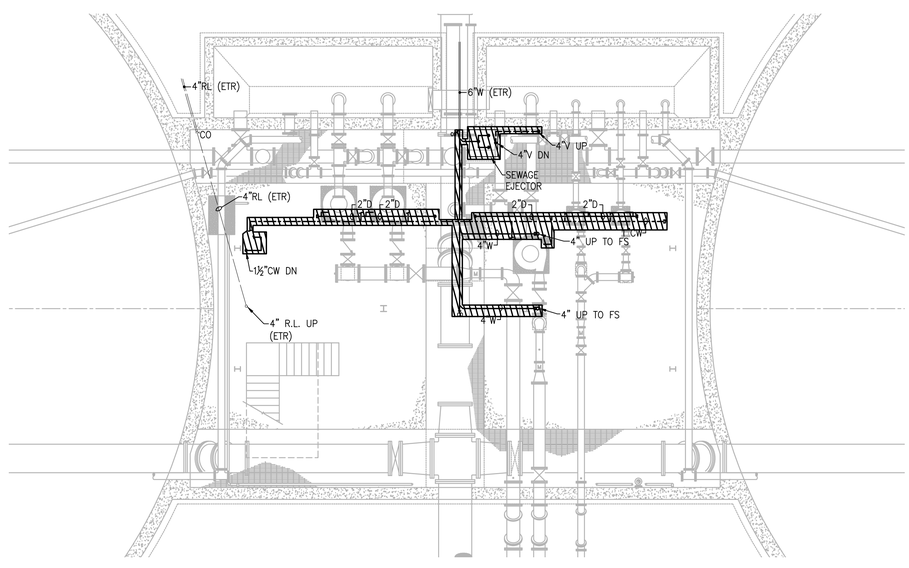

LOWER LEVEL PLAN

SCALE: 1/8"= 1'-0"

PREPARED BY

BETA
www.BETA-Inc.com

REGISTERED PROFESSIONAL

JAMES A. LUCE PLUMBING No. 33920 REGISTERED PROFESSIONAL ENGINEER COMMONWEALTH OF MASSACHUSETTS

SUBCONSULTANT

SAR ENGINEERING, INC.

Mechanical/Electrical Engineers
150 Grossman Drive, Suite 309
Braintree, Massachusetts 02184
617 328-9215
web: www.sar.com

PROJECT

Taunton Wastewater Treatment Facility Improvements Phase 2

Taunton, MA

TITLE

Plumbing Demolition Final Clarifiers No. 1 & 2 Plan & Sludge Pump Station No.1 Plan

NO.	REVISIONS	DATE

DRAWN BY:	RLB
DESIGNED BY:	RLB
CHECKED BY:	JL
ISSUE DATE:	03/31/22
BETA JOB NO.:	6050

SCALE

NONE

UNLESS OTHERWISE NOTED OR CHANGED BY REPRODUCTION

SHEET NO.

P-4.1

3/30/2022 12:23 PM W:\YEAR - 2018\18009.00 - TAUNTON WWTF UPGRADES\PLUMBING DEPARTMENT\PHASE 2\18009.00 PLUMBING FINAL CLARIFIERS & SECONDARY SLUDGE PS-PHASE 2.DWG (BETA STB BW.STB)

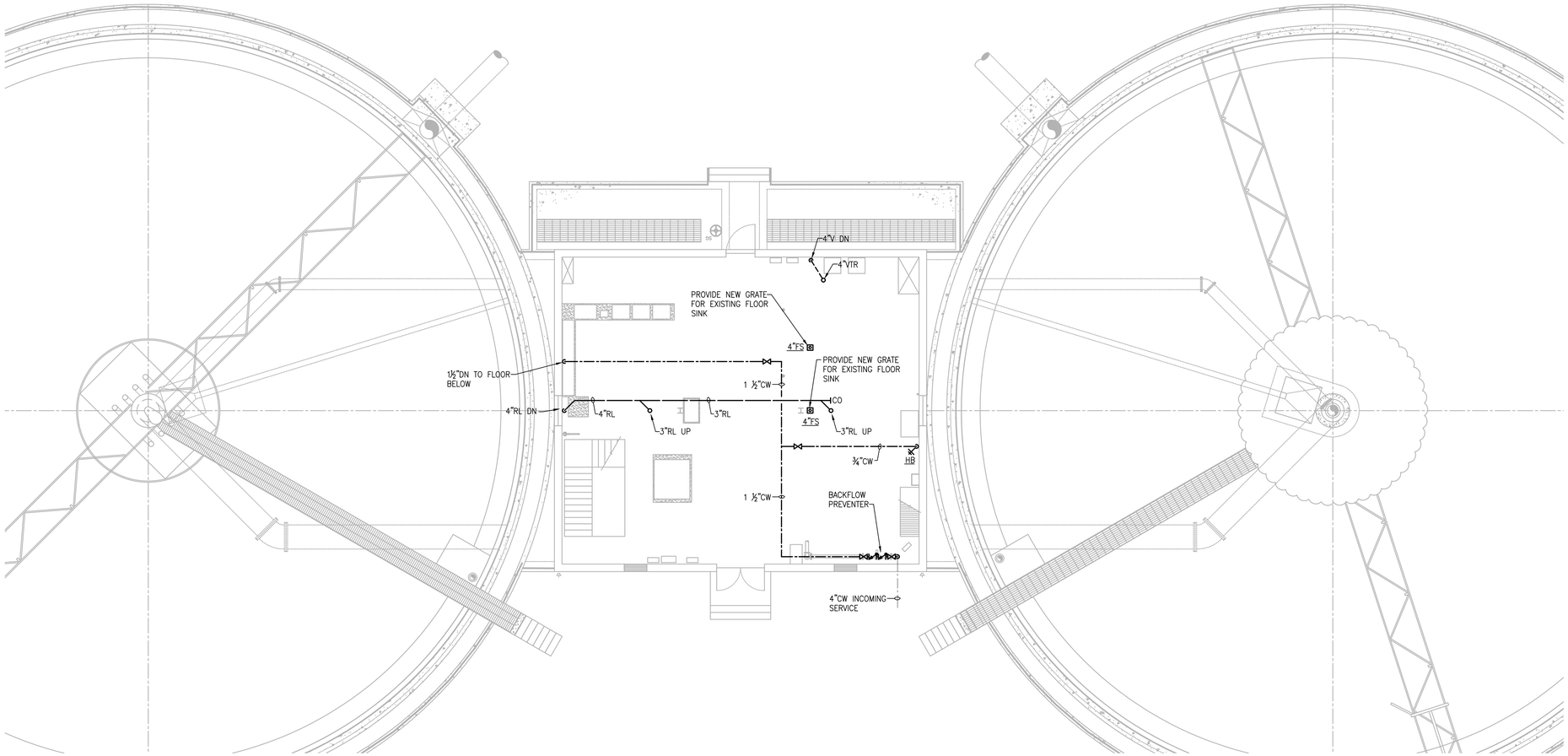

UPPER LEVEL PLAN

SCALE: 1/8"= 1'-0"

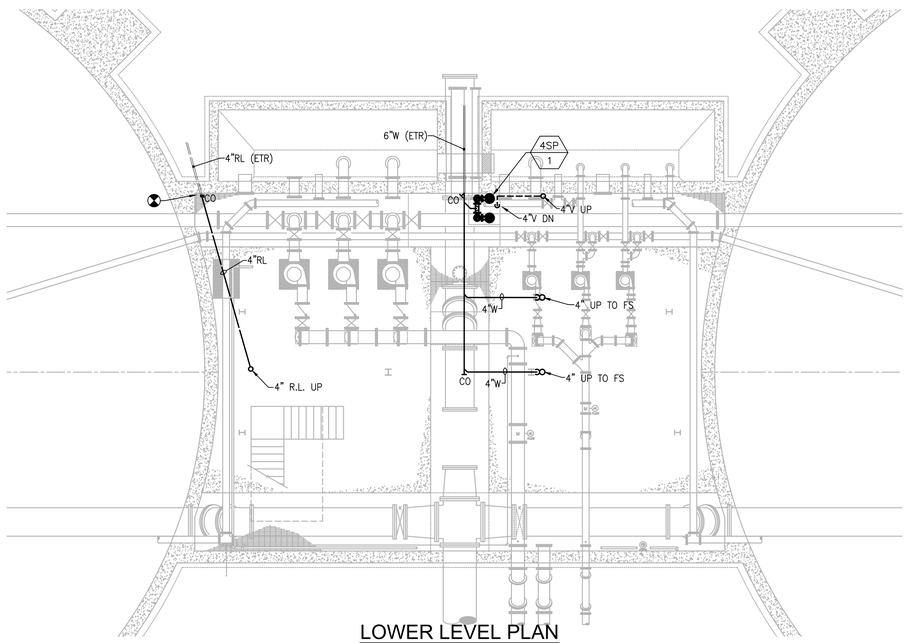

LOWER LEVEL PLAN

SCALE: 1/8"= 1'-0"

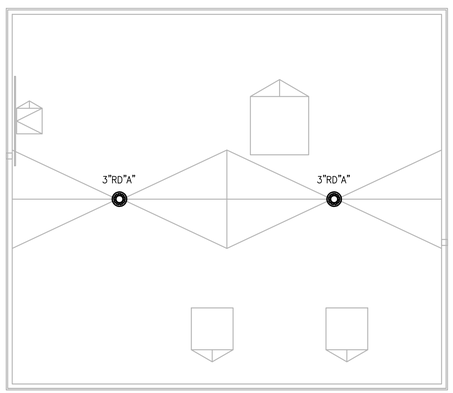

ROOF PLAN

SCALE: 1/8"= 1'-0"

PREPARED BY

BETA

www.BETA-Inc.com

REGISTERED PROFESSIONAL

SUBCONSULTANT

SAR ENGINEERING, INC.

Mechanical/Electrical Engineers
150 Grossman Drive, Suite 309
Braintree, Massachusetts 02184
617 328-9215
web: www.sar.com

PROJECT

Taunton Wastewater Treatment Facility Improvements Phase 2

Taunton, MA

TITLE

Plumbing Final Clarifiers No. 1 & 2 Plan & Sludge Pump Station No.1 Plan

NO.	REVISIONS	DATE

DRAWN BY:	BM
DESIGNED BY:	JD
CHECKED BY:	--
ISSUE DATE:	03/30/2022
BETA JOB NO.:	6050

SCALE

NONE

UNLESS OTHERWISE NOTED OR CHANGED BY REPRODUCTION

SHEET NO.

P-4.2

3/30/2022 12:23 PM W:\YEAR - 2018\18009.00 - TAUNTON WWTF UPGRADES\PLUMBING DEPARTMENT\PHASE 2\18009.00 PLUMBING FINAL CLARIFIERS & SECONDARY SLUDGE PS-PHASE 2.DWG (BETA STB BW.STB)

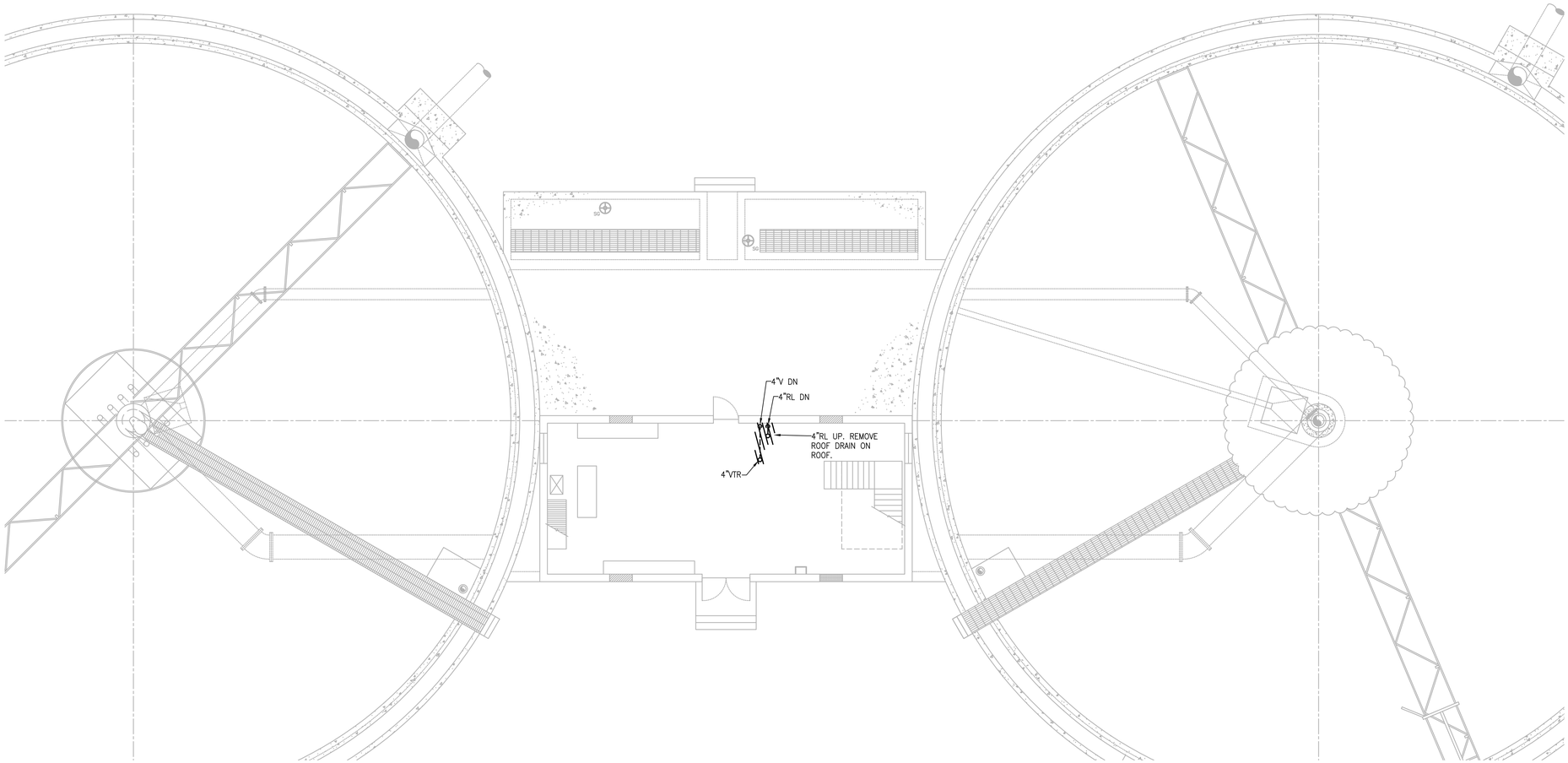

UPPER LEVEL PLAN

SCALE: 1/8"= 1'-0"

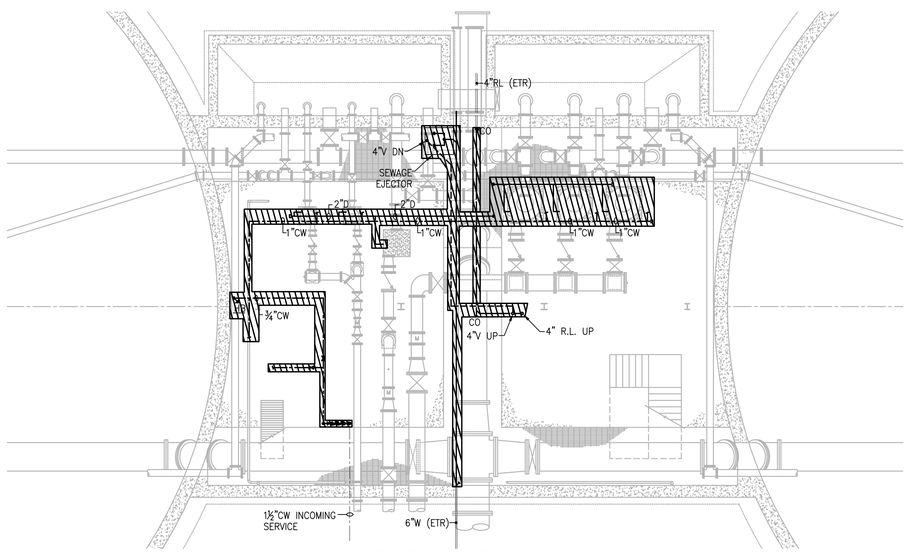

LOWER LEVEL PLAN

SCALE: 1/8"= 1'-0"

PREPARED BY

BETA

www.BETA-Inc.com

REGISTERED PROFESSIONAL

JAMES A. LUCE PLUMBING No. 5899 REGISTERED PROFESSIONAL ENGINEER COMMONWEALTH OF MASSACHUSETTS

SUBCONSULTANT

SAR ENGINEERING, INC.

Mechanical/Electrical Engineers
150 Grossman Drive, Suite 309
Braintree, Massachusetts 02184
617 328-9215
web: www.sar.com

PROJECT

Taunton Wastewater Treatment Facility Improvements Phase 2

Taunton, MA

TITLE

Plumbing Demolition Final Clarifiers No. 3 & 4 Plan & Sludge Pump Station No.2 Plan

NO.	REVISIONS	DATE

DRAWN BY:	RLB
DESIGNED BY:	RLB
CHECKED BY:	JL
ISSUE DATE:	03/31/22
BETA JOB NO.:	6050

SCALE

NONE

UNLESS OTHERWISE NOTED OR CHANGED BY REPRODUCTION

SHEET NO.

P-4.3

3/30/2022 12:24 PM W:\YEAR - 2018\18009.00 - TAUNTON WWTF UPGRADES\PLUMBING DEPARTMENT\PHASE 2\18009.00 PLUMBING FINAL CLARIFIERS & SECONDARY SLUDGE PS-PHASE 2.DWG (BETA.STB BW.STB)

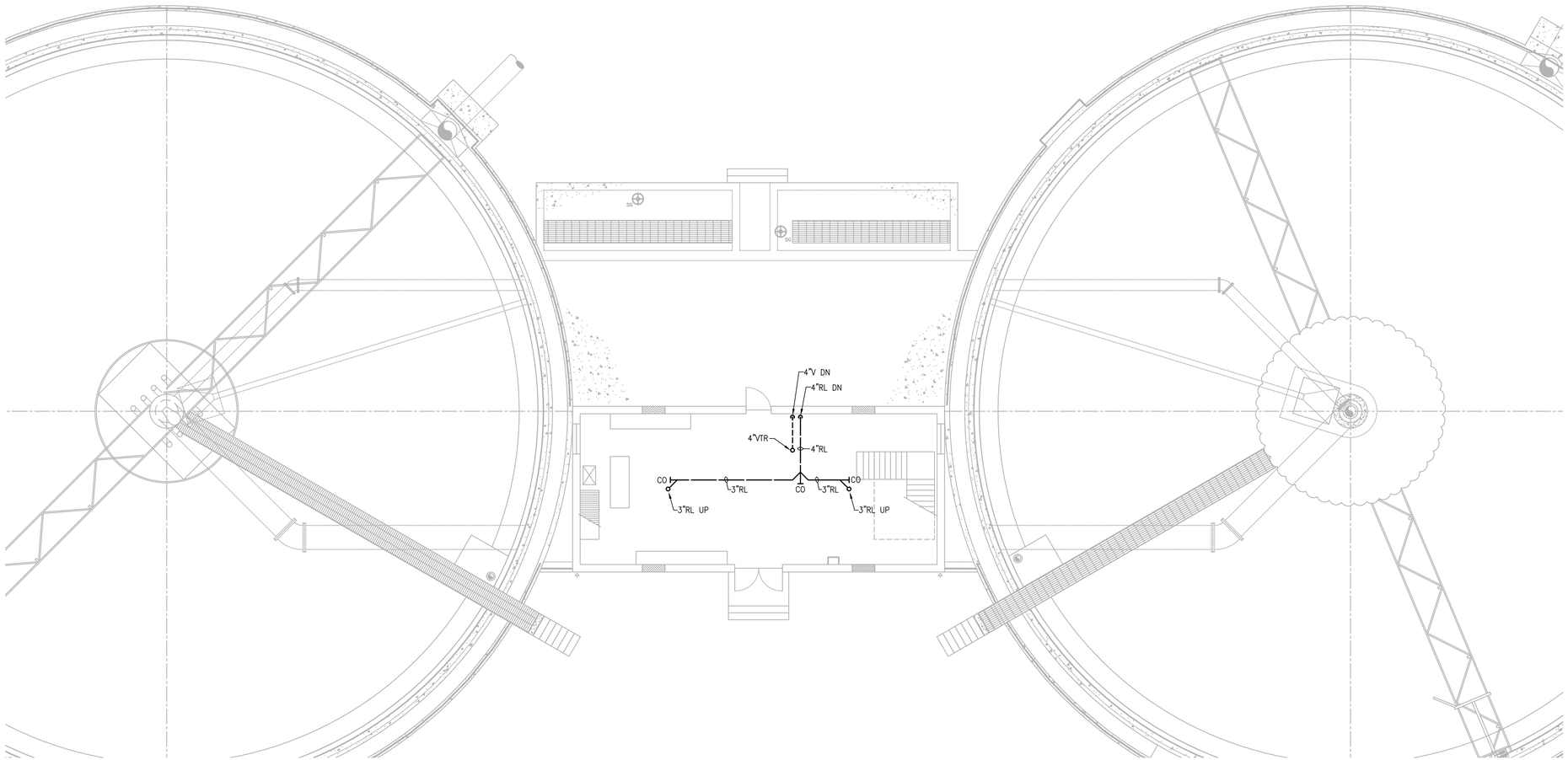

UPPER LEVEL PLAN

SCALE: 1/8"= 1'-0"

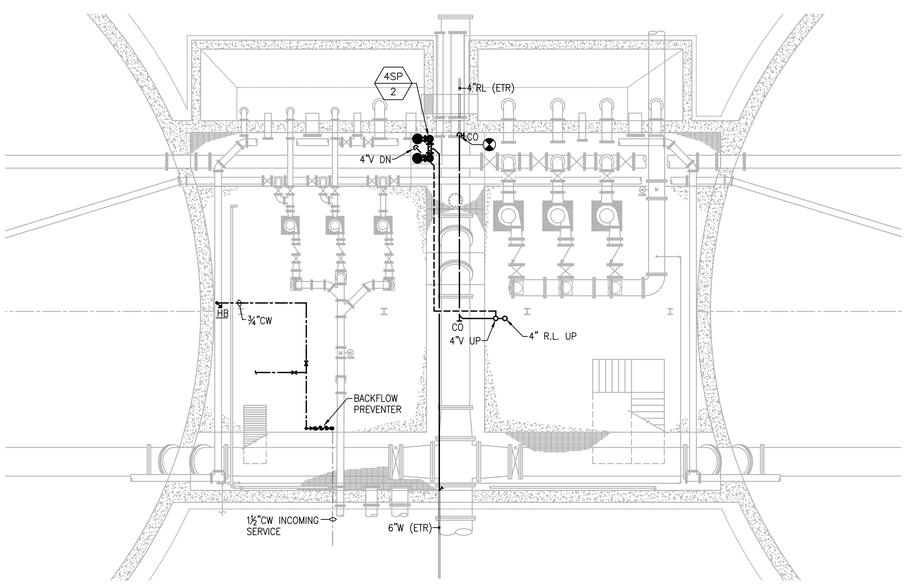

LOWER LEVEL PLAN

SCALE: 1/8"= 1'-0"

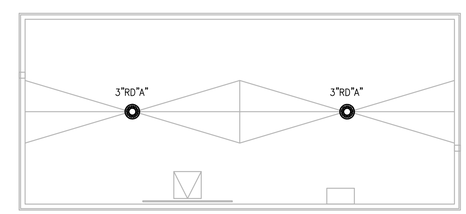

ROOF PLAN

SCALE: 1/8"= 1'-0"

PREPARED BY

BETA

www.BETA-Inc.com

REGISTERED PROFESSIONAL

JAMES A. LUCE PLUMBING No. 58900 REGISTERED PROFESSIONAL ENGINEER COMMONWEALTH OF MASSACHUSETTS

SUBCONSULTANT

SAR ENGINEERING, INC.

Mechanical/Electrical Engineers
150 Grossman Drive, Suite 309
Braintree, Massachusetts 02184
617 328-9215
web: www.sar.com

PROJECT

Taunton Wastewater Treatment Facility Improvements Phase 2

Taunton, MA

TITLE

Plumbing Final Clarifiers No. 3 & 4 Plan & Sludge Pump Station No.2 Plan

NO.	REVISIONS	DATE

DRAWN BY:	RLB
DESIGNED BY:	RLB
CHECKED BY:	JL
ISSUE DATE:	03/31/22
BETA JOB NO.:	6050

SCALE

NONE

UNLESS OTHERWISE NOTED OR CHANGED BY REPRODUCTION

SHEET NO.

P-4.4

3/30/2022 12:24 PM W:\YEAR - 2018\18009.00 - TAUNTON WWTF UPGRADES\PLUMBING DEPARTMENT\PHASE 2\18009.00 PLUMBING FINAL CLARIFIERS & SECONDARY SLUDGE PS-PHASE 2.DWG (BETA STB BW.STB)

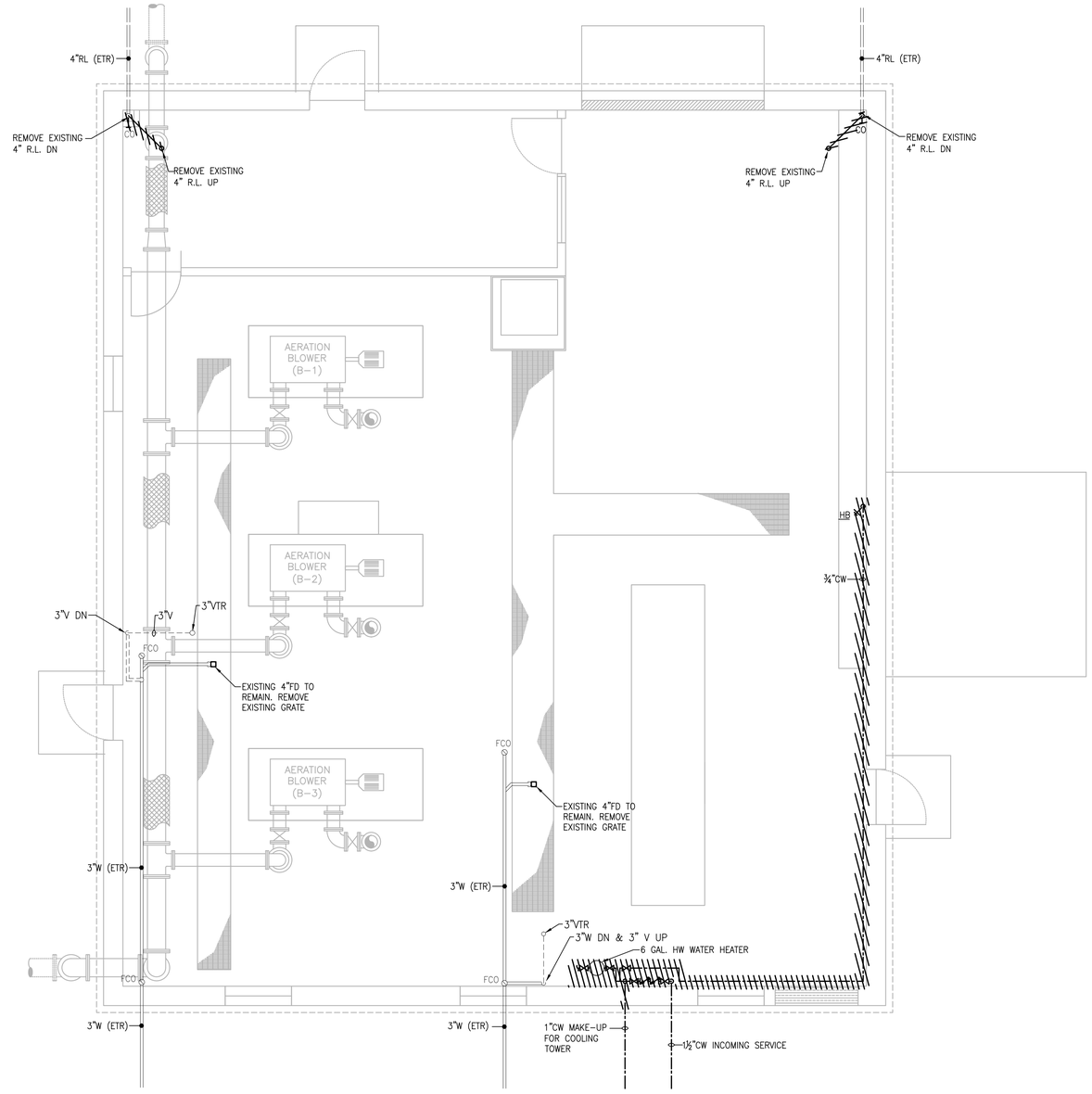

PLAN

SCALE: 1/4"= 1'-0"

PREPARED BY

BETA
www.BETA-Inc.com

REGISTERED PROFESSIONAL

JAMES A. LUCE PLUMBING No. 58990 REGISTERED PROFESSIONAL ENGINEER COMMONWEALTH OF MASSACHUSETTS

SUBCONSULTANT

SAR ENGINEERING, INC.

Mechanical/Electrical Engineers
150 Grossman Drive, Suite 309
Braintree, Massachusetts 02184
617 328-9215
web: www.sar.com

PROJECT

Taunton Wastewater Treatment Facility Improvements Phase 2

Taunton, MA

TITLE

Plumbing Demolition Storage Building Plan

NO.	REVISIONS	DATE

DRAWN BY:	RLB
DESIGNED BY:	RLB
CHECKED BY:	JL
ISSUE DATE:	03/31/22
BETA JOB NO.:	6050

SCALE

AS SHOWN

UNLESS OTHERWISE NOTED OR CHANGED BY REPRODUCTION

SHEET NO.

P-9.1

3/30/2022 12:27 PM W:\YEAR - 2018\18009.00 - TAUNTON WWTF UPGRADES\PLUMBING DEPARTMENT\PHASE 2\18009.00 PLUMBING STORAGE BUILDING-PHASE 2.DWG (BETA STB BW.STB)

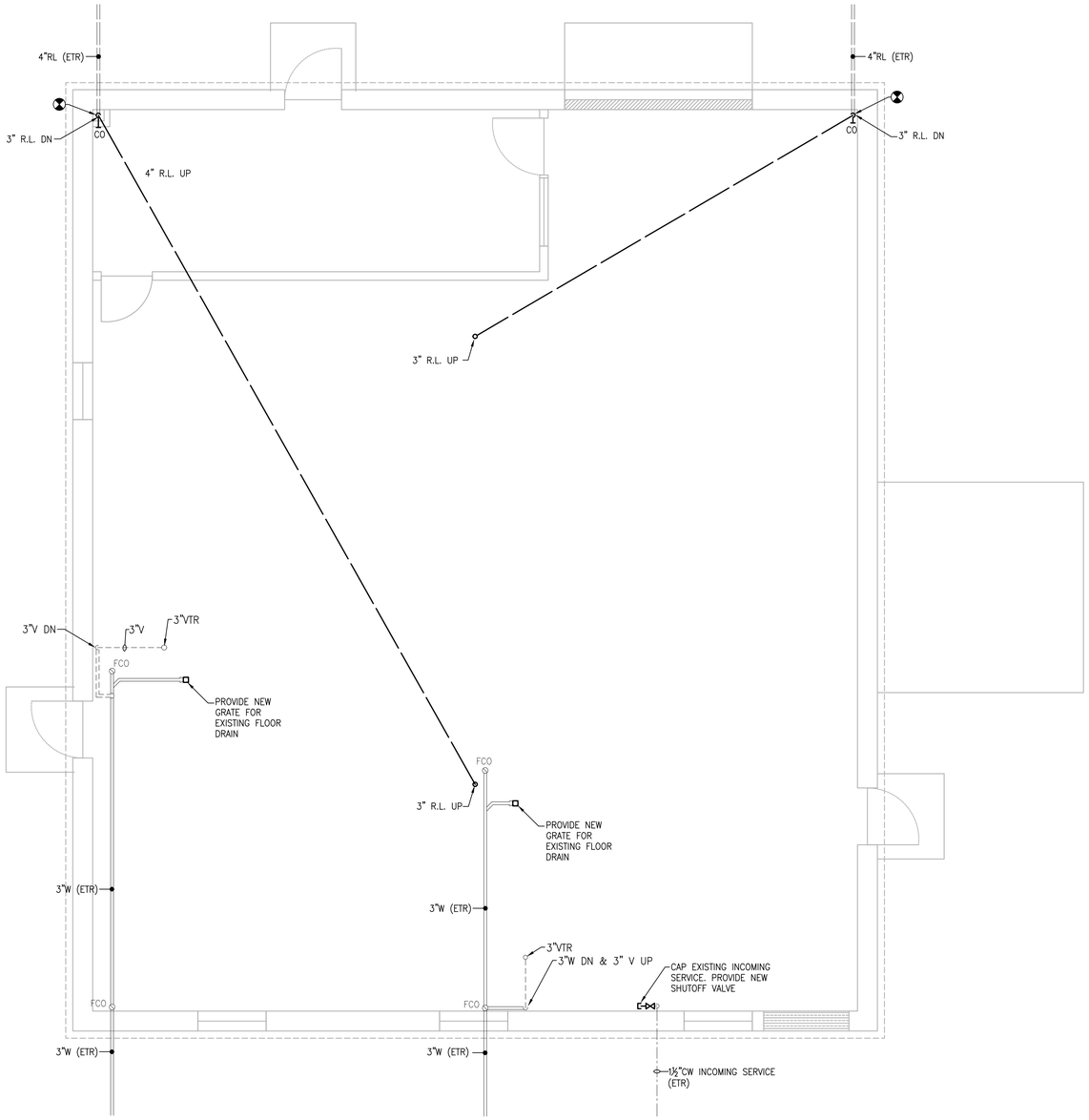

PLAN

SCALE: 1/4"= 1'-0"

PREPARED BY

BETA
www.BETA-Inc.com

REGISTERED PROFESSIONAL

JAMES A. LUCE PLUMBING No. 5[illegible] REGISTERED PROFESSIONAL ENGINEER COMMONWEALTH OF MASSACHUSETTS

SUBCONSULTANT

SAR ENGINEERING, INC.

Mechanical/Electrical Engineers
150 Grossman Drive, Suite 309
Braintree, Massachusetts 02184
617 328-9215
web: www.sar.com

PROJECT

Taunton Wastewater Treatment Facility Improvements Phase 2

Taunton, MA

TITLE

Plumbing Storage Building Plan

NO.	REVISIONS	DATE

DRAWN BY:	RLB
DESIGNED BY:	RLB
CHECKED BY:	JL
ISSUE DATE:	03/31/22
BETA JOB NO.:	6050

SCALE

AS SHOWN

UNLESS OTHERWISE NOTED OR CHANGED BY REPRODUCTION

SHEET NO.

P-9.2

3/30/2022 12:28 PM W:\YEAR - 2018\18009.00 - TAUNTON WWTF UPGRADES\PLUMBING DEPARTMENT\PHASE 2\18009.00 PLUMBING STORAGE BUILDING-PHASE 2.DWG (BETA STB BW.STB)

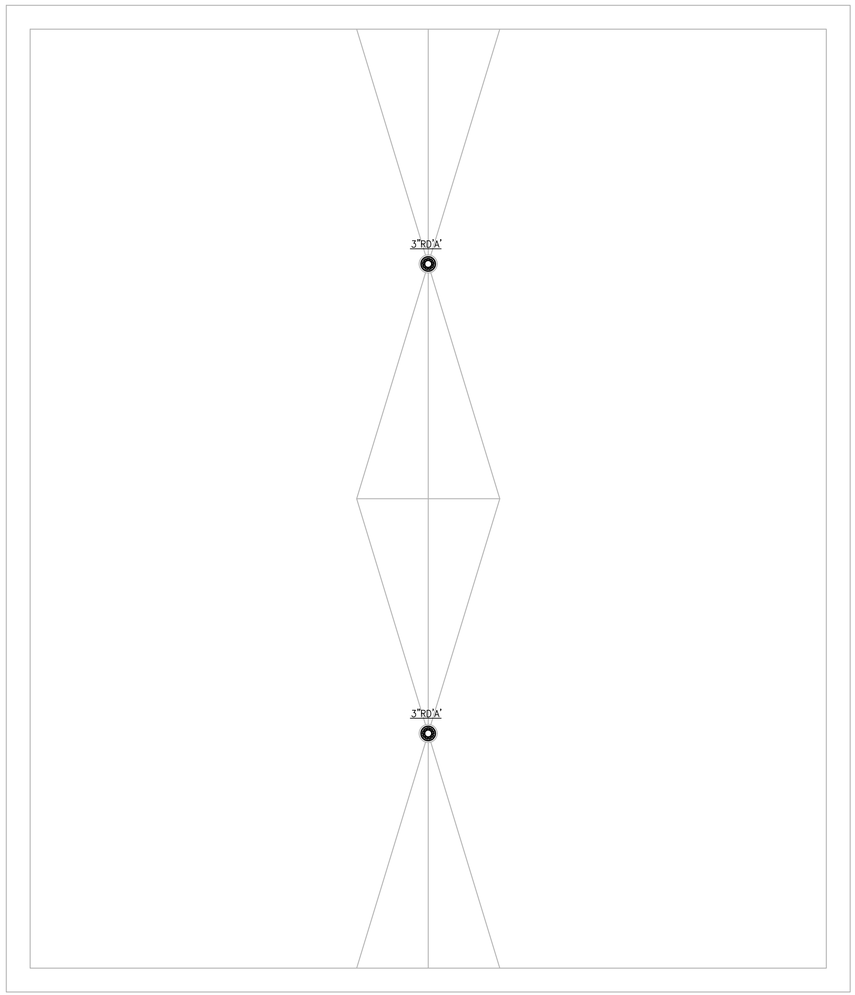

PLAN
SCALE: 1/4"= 1'-0"

PREPARED BY

BETA
www.BETA-Inc.com

REGISTERED PROFESSIONAL

JAMES A. LUCE
PLUMBING
No. 58900
REGISTERED
PROFESSIONAL ENGINEER
COMMONWEALTH OF MASSACHUSETTS

SUBCONSULTANT

SAR
ENGINEERING, INC.

Mechanical/Electrical Engineers
150 Grossman Drive, Suite 309
Braintree, Massachusetts 02184
617 328-9215
web: www.sar.com

PROJECT

Taunton Wastewater Treatment Facility Improvements Phase 2

Taunton, MA

TITLE

Plumbing Storage Building Roof Plan

NO.	REVISIONS	DATE

DRAWN BY:	RLB
DESIGNED BY:	RLB
CHECKED BY:	JL
ISSUE DATE:	03/31/22
BETA JOB NO.:	6050

SCALE

AS SHOWN

UNLESS OTHERWISE NOTED OR CHANGED BY REPRODUCTION

SHEET NO.

P-9.3

3/30/2022 12:28 PM W:\YEAR - 2018\18009.00 - TAUNTON WWTF UPGRADES\PLUMBING DEPARTMENT\PHASE 2\18009.00 PLUMBING STORAGE BUILDING-PHASE 2.DWG (BETA STB BW.STB)

ABBREVIATIONS

AM	AUTO–MANUAL
CP	CONTROL PANEL
DO	DISSOLVED OXYGEN
ES	EMERGENCY STOP
ETH	ETHERNET
FR	FOWARD–REVERSE
HI	HIGH
HOA	HAND–OFF–AUTO
JB	JUNCTION BOX
LR	LOCAL–REMOTE
MC	MOTOR CONTROLLER (STARTER)
OAC	OPEN–AUTO–CLOSE
OEM	EQUIPMENT MANUFACTURE PROVIDED
OIT	OPERATOR INTERFACE TERMINAL
ORP	OXYGEN REDUCTION POTENTIAL
OS	OPERATOR STATION
PH	HYDROGEN ION CONCENTRATION
PRESS	PRESSURE
SS	START–STOP
TEMP	TEMPERATURE
TURB	TURBIDITY
VFD	VARIABLE FREQUENCY DRIVE
S/S	SOFT STARTER
ABA	AERATION BLOWER AIR
BTE	BIOLOGICAL TREATED EFFLUENT
CAR	MICRO CARBON
CEN	CENTRATE
FA	FOUL AIR
FS	FOAM SPRAY
LS	LIME SLURRY
MTH	METHANE
PM	POLYMER
PI	PRIMARY INFLUENT
PS	PRIMARY SLUDGE
PTE	PRIMARY TANK EFFLUENT
RAS	RETURN ACTIVATED SLUDGE
RSW	RAW SEWAGE WATER
SAN	SANITARY WASTE
SAXE	SECONDARY ANOXIC EFFLUENT
SC	SCUM
SBS	SODIUM BISULFITE
SHC	SODIUM HYPOCHLORITE
SSE	SECONDARY SETTLED EFLUENT
STO	SLUDGE THICKENER OVERFLOW
TEF	TREATED EFFLUENT WATER
TS	THICKENED SLUDGE
WAS	WASTE ACTIVATED SLUDGE

INSTRUMENT IDENTIFICATION LETTERS

	FIRST LETTER		SUCCECEEDING LETTER(S)		
	PROCESS OR INIATING VAIRABLE	MODIFIER	READOUT OR PASSIVE FUNCTION	OUTPUT FUNCTION	MODIFIER
A	ANALYSIS		ALARM		
B	BURNER, COMBUST.		USER'S CHOICE	USER'S CHOICE	USER'S CHOICE
C	USER'S CHOICE		USER'S CHOICE	CLOSE	USER'S CHOICE
D	USER'S CHOICE	DIFFERENCE	USER'S CHOICE	USER'S CHOICE	USER'S CHOICE
E	VOLTAGE		PRIMARY ELEMENT		
F	FLOW	FRACTION			
G	USER'S CHOICE		GLASS		
H	HAND, MANUAL		HORN		HIGH
I	CURRENT		INDICATE		
J	POWER	SCAN			
K	TIME, SCHEDULE			CONTROL STATION	
L	LEVEL		LIGHT		LOW
M	MOISTURE, HUMIDITY				MIDDLE
N	USER'S CHOICE		USER'S CHOICE	USER'S CHOICE	USER'S CHOICE
O	USER'S CHOICE		USER'S CHOICE	OPEN	USER'S CHOICE
P	PRESSURE, VACUUM		POINT, TEST		
Q	QUANTITY, EVENT	TOTALIZE			
R	RADIATION		RECORD, PRINT		
S	SPEED, FREQUENCY	SAFETY		SWITCH	
T	TEMP.			TRANSMIT	
U	MULTI–VARIABLE		MULTI–FUNCTION	MULTI–FUNCTION	MULTI–FUNCTION
V	VIBRATION			VALVE, DAMPER	
W	WEIGHT, FORCE		WELL		
X	UN–CLASSIFIED		UN–CLASSIFIED	UN–CLASSIFIED	UN–CLASSIFIED
Y	EVENT, STATE			RELAY, COMPUTE	
Z	POSITION			DRIVE, ACTUATOR	

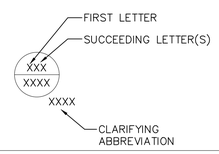

LINE LEGEND

- NEW PROCESS PIPING
- EXISTING PROCESS PIPING
- PNEUMATIC AIR PIPING
- DIGITAL SIGNAL
- ANALOG SIGNAL
- ELECTRICAL POWER OR CONTROL
- XXX / XXXX — FIELD INSTRUMENTATION
- XXX / XXXX — PLC INTERFACE
- XXX / XXXX — PANEL/OIT/SCADA DISPLAY AND OR CONTROL
- XXX / XXXX — INDEPENDENT CONTROIL CIRCUIT
- DRAWING AND OR PROCESS REFERENCE

GENERAL NOTES

1. DRAWINGS INDICATED WITH PHASE 1 IN THE TITLE BLOCK PROJECT NAME ARE FOR REFERENCE ONLY.

SYMBOL LEGEND

- ACTUATOR – MOTORIZED
- ACTUATOR – SOLENOID
- AIR REGULATOR/SEPERATOR
- ANALYZER
- AERATOR – BUBBLE
- AERATOR – SURFACE
- BLOWER/FAN
- CALIBRATION COLUMN
- COMPRESSOR – ROTARY TYPE
- DRAIN
- EDUCATOR
- ELECTRIC MOTOR
- EMERGENCY EYEWASH/SHOWER
- FLEX CONNECTION
- FLOW METER – MAGNETIC
- FLOW METER – ULTRASONIC STRAP ON
- FLOW METER – ROTAMETER
- FLOW METER – THERMAL MASS
- FLOW SWITCH
- GRINDER
- HOSE
- LEVEL SWITCH – FLOAT SWITCH
- LEVEL SWITCH – PADDLE WHEEL
- LEVEL TRANSMITTER – SUBMERSIBLE PRESSURE
- LEVEL TRANSMITTER – ULTRANSONIC
- LEVEL TRANSMITTER – RADAR
- MACERATOR
- MIXER
- MIXER – SUBMERSIBLE
- MOTOR
- POSITION SWITCH
- PULSATION DAMPENER
- PUMP – CENTRIFUGAL
- PUMP – PERISTALTIC
- PUMP – PROGRESSING/CAVITY
- PUMP – RECIPROCATING/METERING
- PUMP – ROTARY LOBE
- PUMP – SUBMERSIBLE
- SLIDE OR SLUICE GATE
- STATIC MIXER
- VALVE – BALL
- VALVE – BUTTERFLY
- VALVE – CHECK
- VALVE – GATE
- VALVE – GLOBE
- VALVE – PINCH
- VALVE – PLUG
- VALVE – PRESSURE REGULATING
- VALVE – PRESSURE REGULATING
- VIBRATOR

PREPARED BY

BETA
www.BETA-Inc.com

REGISTERED PROFESSIONAL

COMMONWEALTH OF MASSACHUSETTS
MICHAEL J. COTTER
ELECTRICAL
No. 40599
REGISTERED PROFESSIONAL ENGINEER

SUBCONSULTANT

SAR ENGINEERING, INC.
Mechanical/Electrical Engineers
150 Grossman Drive, Suite 309
Braintree, Massachusetts 02184
617 328-9215
web: www.sar.com

PROJECT

Taunton Wastewater Treatment Facility Improvements Phase 1

Taunton, MA

TITLE

INSTRUMENTATION & CONTROLS LEGEND AND NOTES

NO.	REVISIONS	DATE

DRAWN BY:	RB
DESIGNED BY:	MC
CHECKED BY:	MC
ISSUE DATE:	7/2/21
BETA JOB NO.:	6050

SCALE

AS SHOWN

UNLESS OTHERWISE NOTED OR CHANGED BY REPRODUCTION

SHEET NO. I-0.1

3/30/2022 3:46 PM W:\YEAR - 2018\18009.00 - TAUNTON WWTF UPGRADES\ELECTRICAL DEPARTMENT\PHASE 2\18009.00 I&C - P2.DWG (BETA STB BW.STB)

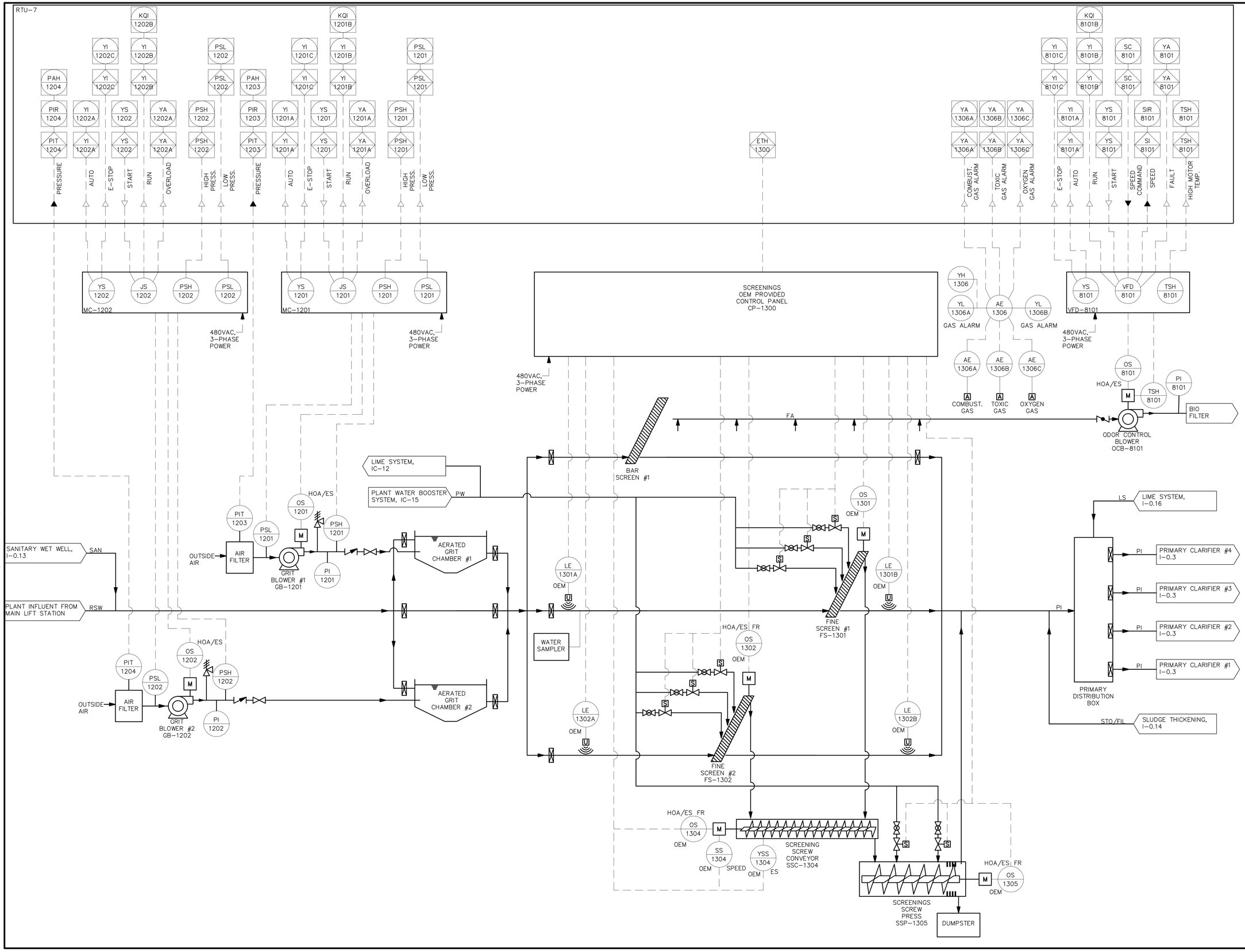

PREPARED BY

BETA
www.BETA-Inc.com

REGISTERED PROFESSIONAL

COMMONWEALTH OF MASSACHUSETTS
MICHAEL J. COTTER
ELECTRICAL
No. 40599
REGISTERED PROFESSIONAL ENGINEER

SUBCONSULTANT

SAR ENGINEERING, INC.

Mechanical/Electrical Engineers
150 Grossman Drive, Suite 309
Braintree, Massachusetts 02184
617 328-9215
web: www.sar.com

PROJECT

Taunton Wastewater Treatment Facility Improvements Phase 1

Taunton, MA

TITLE

INSTRUMENTATION & CONTROLS HEADWORKS

NO.	REVISIONS	DATE

DRAWN BY:	RB
DESIGNED BY:	MC
CHECKED BY:	MC
ISSUE DATE:	7/2/21
BETA JOB NO.:	6050

SCALE

AS SHOWN

UNLESS OTHERWISE NOTED OR CHANGED BY REPRODUCTION

SHEET NO.

I-0.2

3/29/2022 2:19 PM W:\YEAR - 2018\18009.00 - TAUNTON WWTF UPGRADES\ELECTRICAL DEPARTMENT\PHASE 2\18009.00 I&C - P2.DWG (BETA-STB BW.STB)

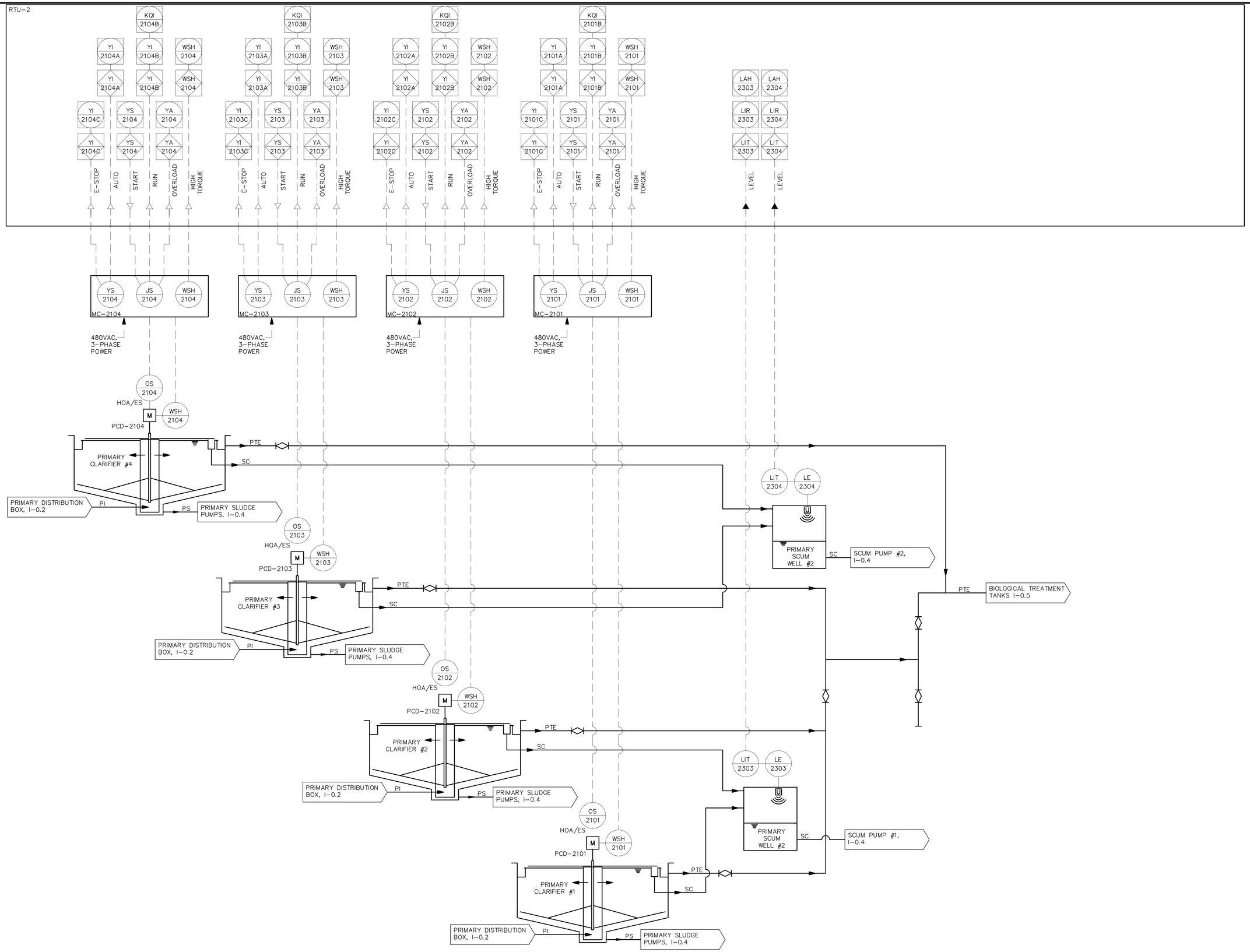

PREPARED BY

BETA
www.BETA-Inc.com

REGISTERED PROFESSIONAL

COMMONWEALTH OF MASSACHUSETTS
MICHAEL J. COTTER
ELECTRICAL
No. 40599
REGISTERED PROFESSIONAL ENGINEER

SUBCONSULTANT

SAR ENGINEERING, INC.

Mechanical/Electrical Engineers
150 Grossman Drive, Suite 309
Braintree, Massachusetts 02184
617 328-9215
web: www.sar.com

PROJECT

Taunton Wastewater Treatment Facility Improvements Phase 1

Taunton, MA

TITLE

INSTRUMENTATION & CONTROLS PRIMARY CLARIFIERS

NO.	REVISIONS	DATE

DRAWN BY:	RB
DESIGNED BY:	MC
CHECKED BY:	MC
ISSUE DATE:	7/2/21
BETA JOB NO.:	6050

SCALE

AS SHOWN

UNLESS OTHERWISE NOTED OR CHANGED BY REPRODUCTION

SHEET NO.

I-0.3

3/29/2022 2:19 PM W:\YEAR - 2018\18009.00 - TAUNTON WWTF UPGRADES\ELECTRICAL DEPARTMENT\PHASE 2\18009.00 I&C - P2.DWG (BETA STB BW.STB)

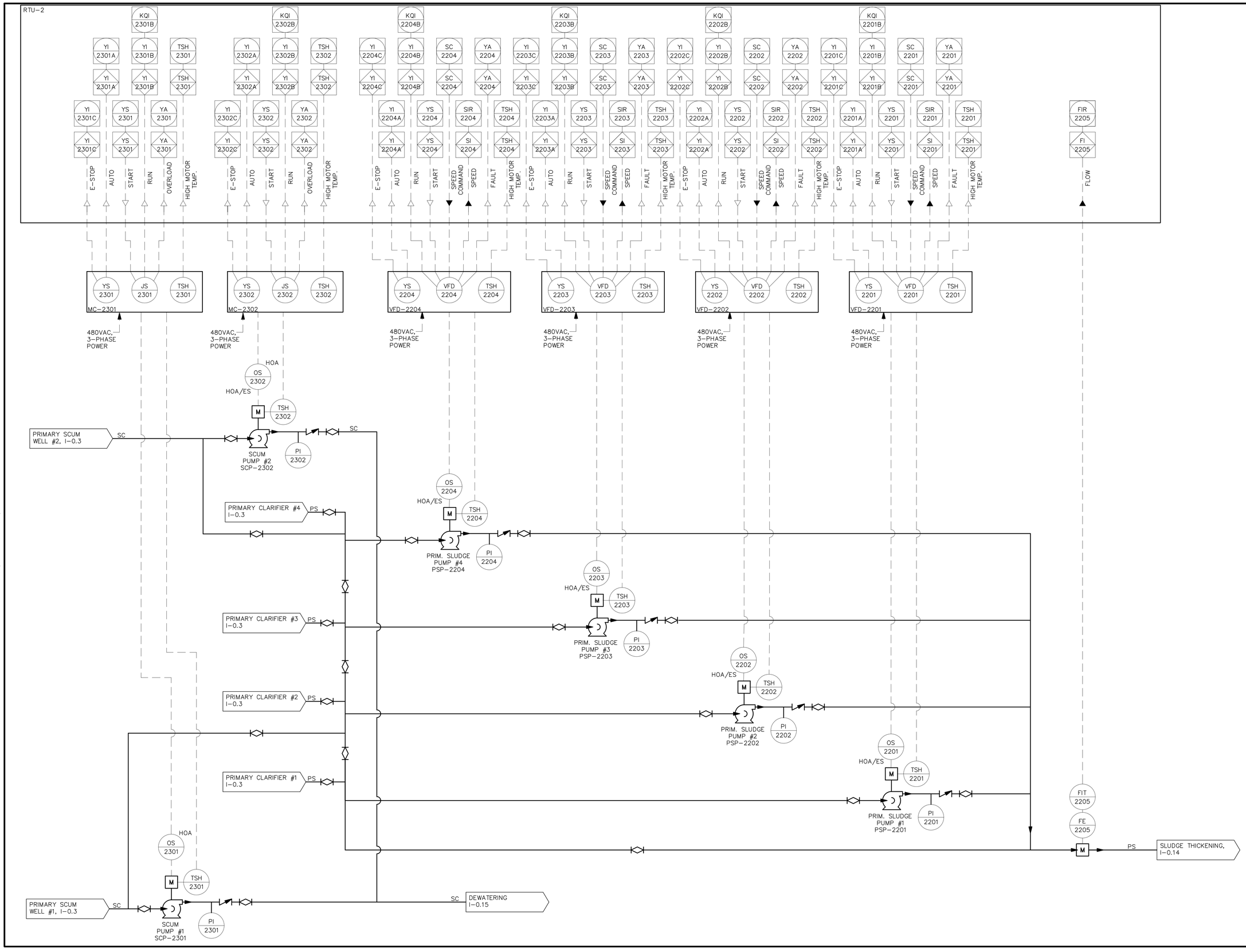

PREPARED BY

BETA
www.BETA-Inc.com

REGISTERED PROFESSIONAL

COMMONWEALTH OF MASSACHUSETTS
MICHAEL J. COTTER
ELECTRICAL
No. 40599
REGISTERED PROFESSIONAL ENGINEER

SUBCONSULTANT

SAR ENGINEERING, INC.

Mechanical/Electrical Engineers
150 Grossman Drive, Suite 309
Braintree, Massachusetts 02184
617 328-9215
web: www.sar.com

PROJECT

Taunton Wastewater Treatment Facility Improvements Phase 1

Taunton, MA

TITLE

INSTRUMENTATION & CONTROLS PRIMARY SLUDGE PUMPS

NO.	REVISIONS	DATE

DRAWN BY:	RB
DESIGNED BY:	MC
CHECKED BY:	MC
ISSUE DATE:	7/2/21
BETA JOB NO.:	6050

SCALE

AS SHOWN

UNLESS OTHERWISE NOTED OR CHANGED BY REPRODUCTION

SHEET NO.

I-0.4

3/29/2022 2:20 PM W:\YEAR - 2018\18009.00 - TAUNTON WWTF UPGRADES\ELECTRICAL DEPARTMENT\PHASE 2\18009.00 I&C - P2.DWG (BETA STB BW.STB)

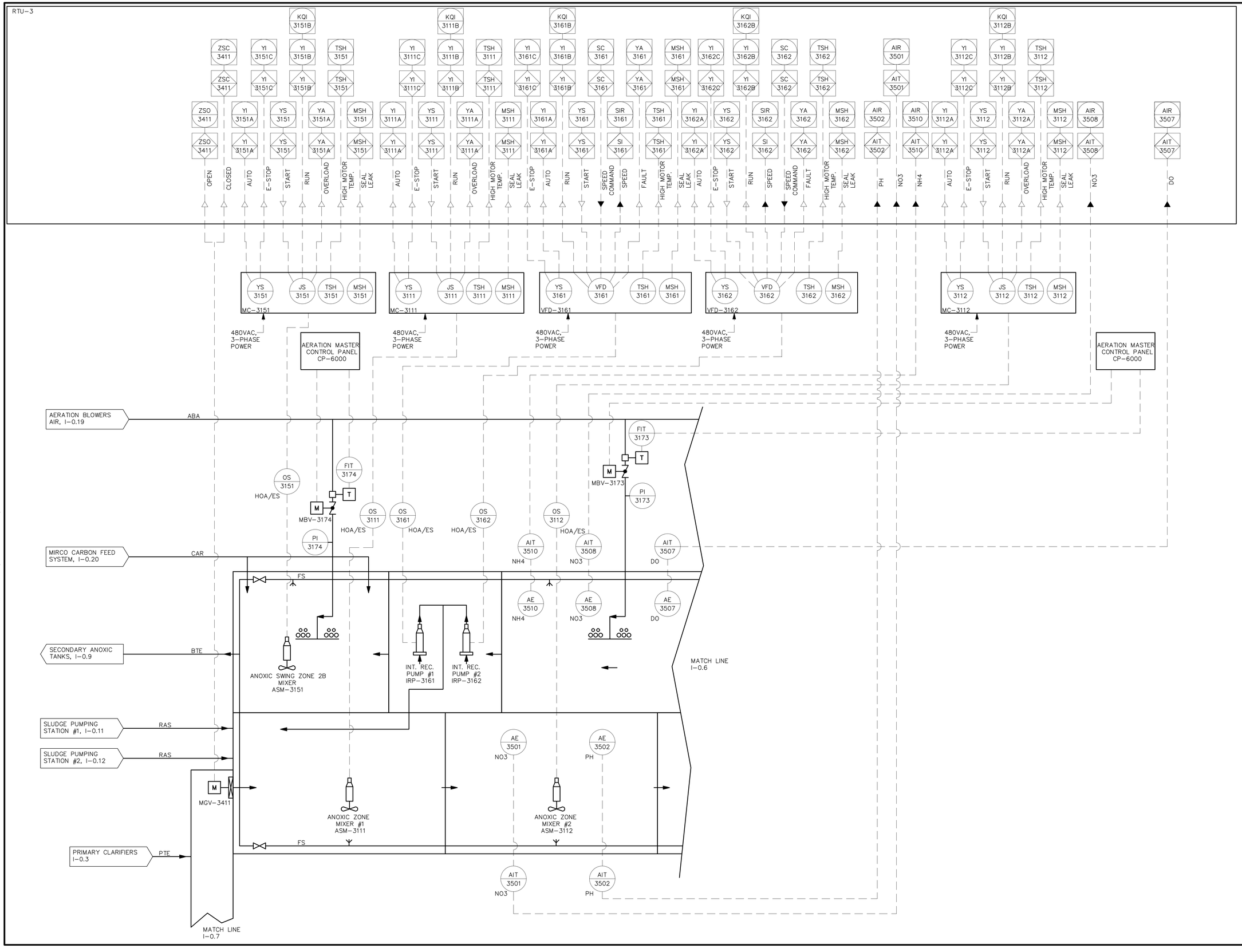

PREPARED BY

BETA
www.BETA-Inc.com

REGISTERED PROFESSIONAL

COMMONWEALTH OF MASSACHUSETTS
MICHAEL J. COTTER
ELECTRICAL
No. 40599
REGISTERED PROFESSIONAL ENGINEER

SUBCONSULTANT

SAR ENGINEERING, INC.
Mechanical/Electrical Engineers
150 Grossman Drive, Suite 309
Braintree, Massachusetts 02184
617 328-9215
web: www.sar.com

PROJECT

Taunton Wastewater Treatment Facility Improvements Phase 2

Taunton, MA

TITLE

INSTRUMENTATION & CONTROLS BIOLOGICAL TREATMENT TRAIN #1

NO.	REVISIONS	DATE

DRAWN BY:	RB
DESIGNED BY:	MC
CHECKED BY:	MC
ISSUE DATE:	03/31/22
BETA JOB NO.:	6050

SCALE

NONE

UNLESS OTHERWISE NOTED OR CHANGED BY REPRODUCTION

SHEET NO.

I-0.5

3/29/2022 2:20 PM W:\YEAR - 2018\18009.00 - TAUNTON WWTF UPGRADES\ELECTRICAL DEPARTMENT\PHASE 2\18009.00 I&C - P2.DWG (BETA STB BW.STB)

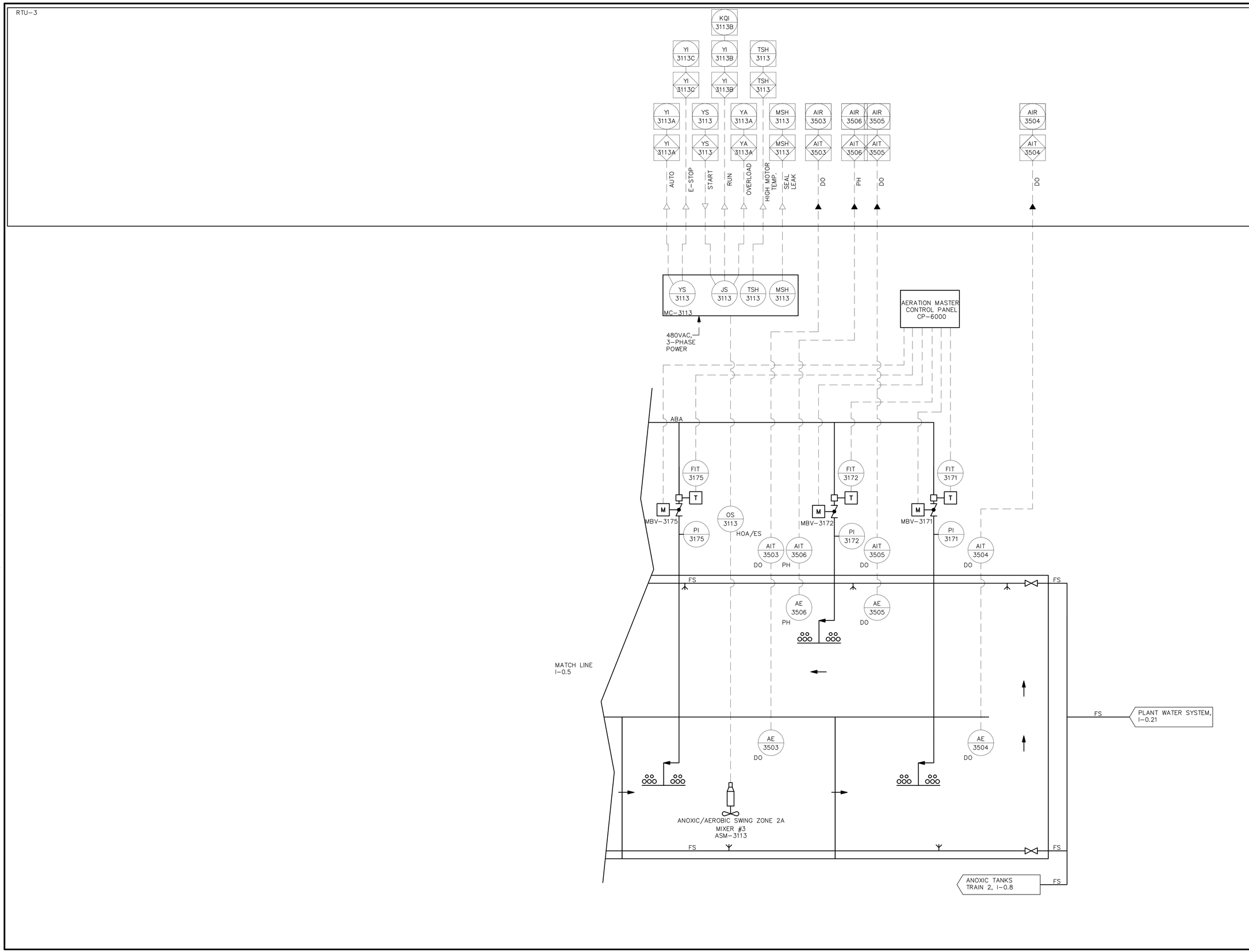

PREPARED BY

BETA
www.BETA-Inc.com

REGISTERED PROFESSIONAL

COMMONWEALTH OF MASSACHUSETTS
MICHAEL J. COTTER
ELECTRICAL
No. 40599
REGISTERED PROFESSIONAL ENGINEER

SUBCONSULTANT

SAR ENGINEERING, INC.

Mechanical/Electrical Engineers
150 Grossman Drive, Suite 309
Braintree, Massachusetts 02184
617 328-9215
web: www.sar.com

PROJECT

Taunton Wastewater Treatment Facility Improvements Phase 2

Taunton, MA

TITLE

INSTRUMENTATION & CONTROLS BIOLOGICAL TREATMENT TRAIN #1

NO.	REVISIONS	DATE

DRAWN BY:	RB
DESIGNED BY:	MC
CHECKED BY:	MC
ISSUE DATE:	03/31/22
BETA JOB NO.:	6050

SCALE

NONE

UNLESS OTHERWISE NOTED OR CHANGED BY REPRODUCTION

SHEET NO.

I-0.6

3/29/2022 2:20 PM W:\YEAR - 2018\18009.00 - TAUNTON WWTF UPGRADES\ELECTRICAL DEPARTMENT\PHASE 2\18009.00 I&C - P2.DWG (BETA STB BW.STB)

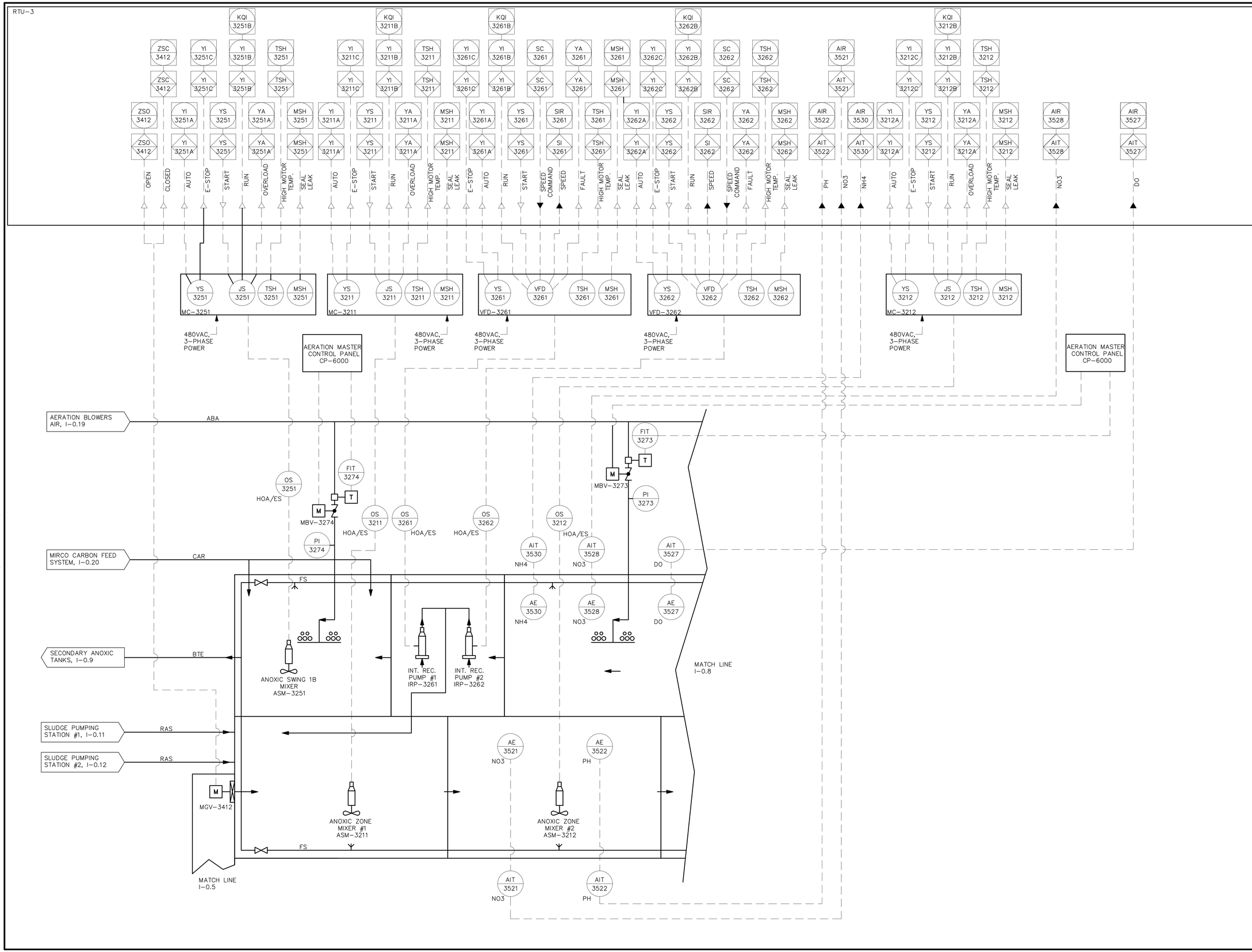

PREPARED BY

BETA
www.BETA-Inc.com

REGISTERED PROFESSIONAL

COMMONWEALTH OF MASSACHUSETTS
MICHAEL J. COTTER
ELECTRICAL
No. 40599
REGISTERED PROFESSIONAL ENGINEER

SUBCONSULTANT

SAR ENGINEERING, INC.

Mechanical/Electrical Engineers
150 Grossman Drive, Suite 309
Braintree, Massachusetts 02184
617 328-9215
web: www.sar.com

PROJECT

Taunton Wastewater Treatment Facility Improvements Phase 2

Taunton, MA

TITLE

INSTRUMENTATION & CONTROLS BIOLOGICAL TREATMENT TRAIN #2

NO.	REVISIONS	DATE

DRAWN BY:	RB
DESIGNED BY:	MC
CHECKED BY:	MC
ISSUE DATE:	03/31/22
BETA JOB NO.:	6050

SCALE

NONE

UNLESS OTHERWISE NOTED OR CHANGED BY REPRODUCTION

SHEET NO.

I-0.7

3/29/2022 2:21 PM W:\YEAR - 2018\18009.00 - TAUNTON WWTF UPGRADES\ELECTRICAL DEPARTMENT\PHASE 2\18009.00 I&C - P2.DWG (BETA STB BW.STB)

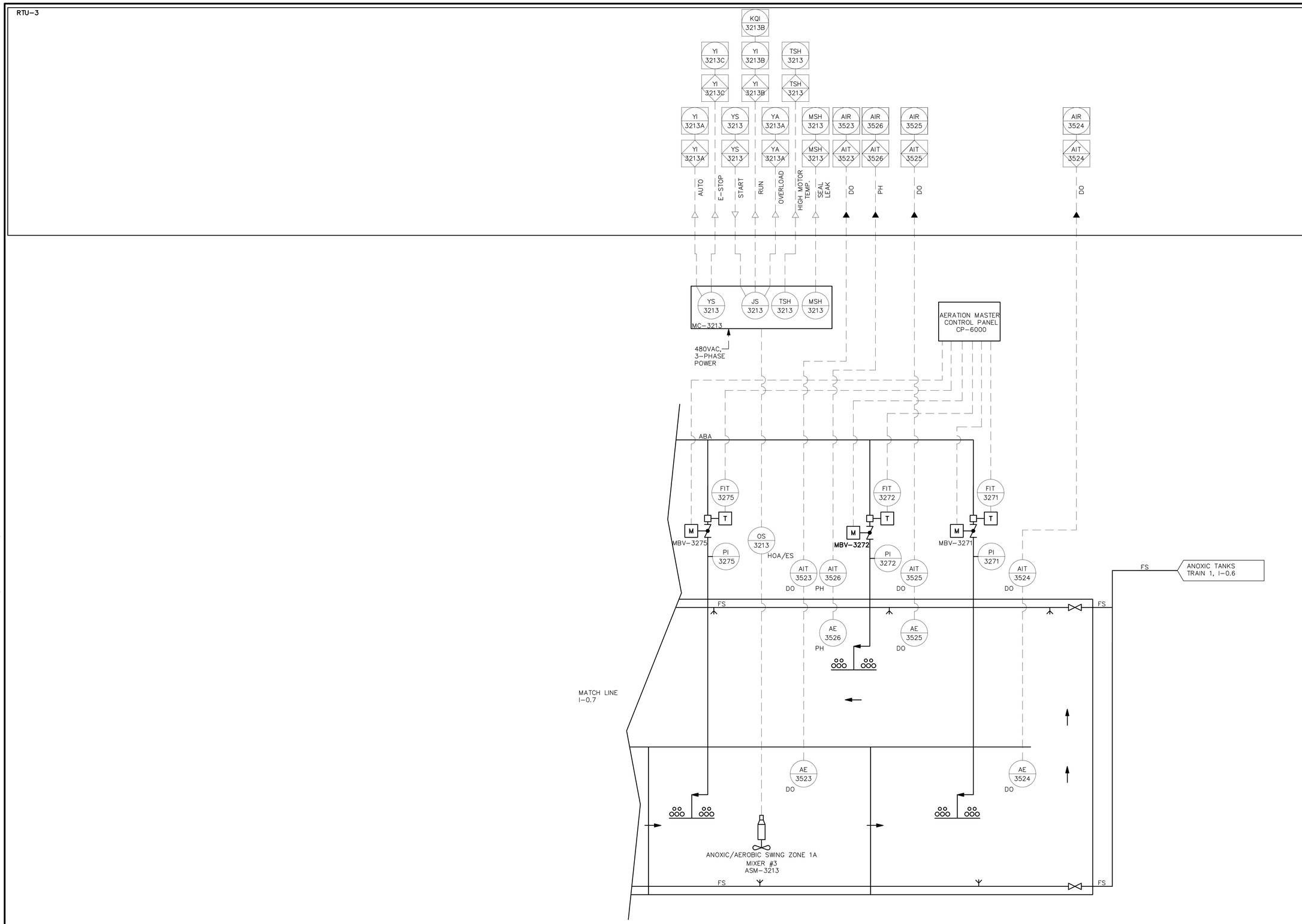

PREPARED BY

BETA
www.BETA-Inc.com

REGISTERED PROFESSIONAL

COMMONWEALTH OF MASSACHUSETTS
MICHAEL J. COTTER
ELECTRICAL
No. 40599
REGISTERED PROFESSIONAL ENGINEER

SUBCONSULTANT

SAR ENGINEERING, INC.
Mechanical/Electrical Engineers
150 Grossman Drive, Suite 309
Braintree, Massachusetts 02184
617 328-9215
web: www.sar.com

PROJECT

Taunton Wastewater Treatment Facility Improvements Phase 2

Taunton, MA

TITLE

INSTRUMENTATION & CONTROLS BIOLOGICAL TREATMENT TRAIN #2

NO.	REVISIONS	DATE

DRAWN BY:	RB
DESIGNED BY:	MC
CHECKED BY:	MC
ISSUE DATE:	03/31/22
BETA JOB NO.:	6050

SCALE

NONE

UNLESS OTHERWISE NOTED OR CHANGED BY REPRODUCTION

SHEET NO.

I-0.8

3/29/2022 2:21 PM W:\YEAR - 2018\18009.00 - TAUNTON WWTF UPGRADES\ELECTRICAL DEPARTMENT\PHASE 2\18009.00 I&C - P2.DWG (BETA STB BW.STB)

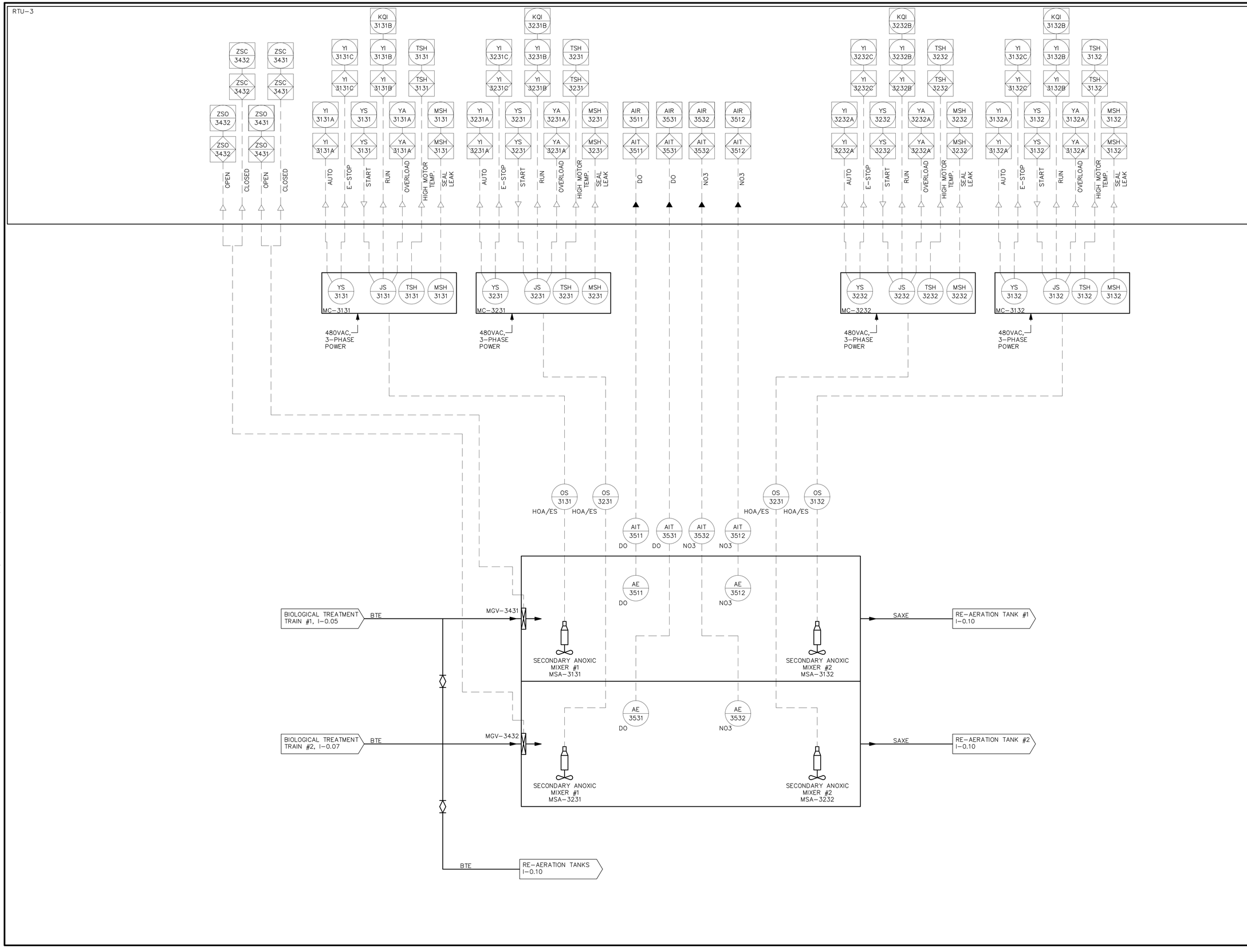

PREPARED BY

BETA
www.BETA-Inc.com

REGISTERED PROFESSIONAL

COMMONWEALTH OF MASSACHUSETTS
MICHAEL J. COTTER
ELECTRICAL
No. 40599
REGISTERED PROFESSIONAL ENGINEER

SUBCONSULTANT

SAR ENGINEERING, INC.
Mechanical/Electrical Engineers
150 Grossman Drive, Suite 309
Braintree, Massachusetts 02184
617 328-9215
web: www.sar.com

PROJECT

Taunton Wastewater Treatment Facility Improvements Phase 2

Taunton, MA

TITLE

INSTRUMENTATION & CONTROLS SECONDARY ANOXIC TANKS

NO.	REVISIONS	DATE

DRAWN BY:	RB
DESIGNED BY:	MC
CHECKED BY:	MC
ISSUE DATE:	03/31/22
BETA JOB NO.:	6050

SCALE

NONE

UNLESS OTHERWISE NOTED OR CHANGED BY REPRODUCTION

SHEET NO. I-0.9

3/30/2022 3:43 PM W:\YEAR - 2018\18009.00 - TAUNTON WWTF UPGRADES\ELECTRICAL DEPARTMENT\PHASE 2\18009.00 I&C - P2.DWG (BETA STB BW.STB)

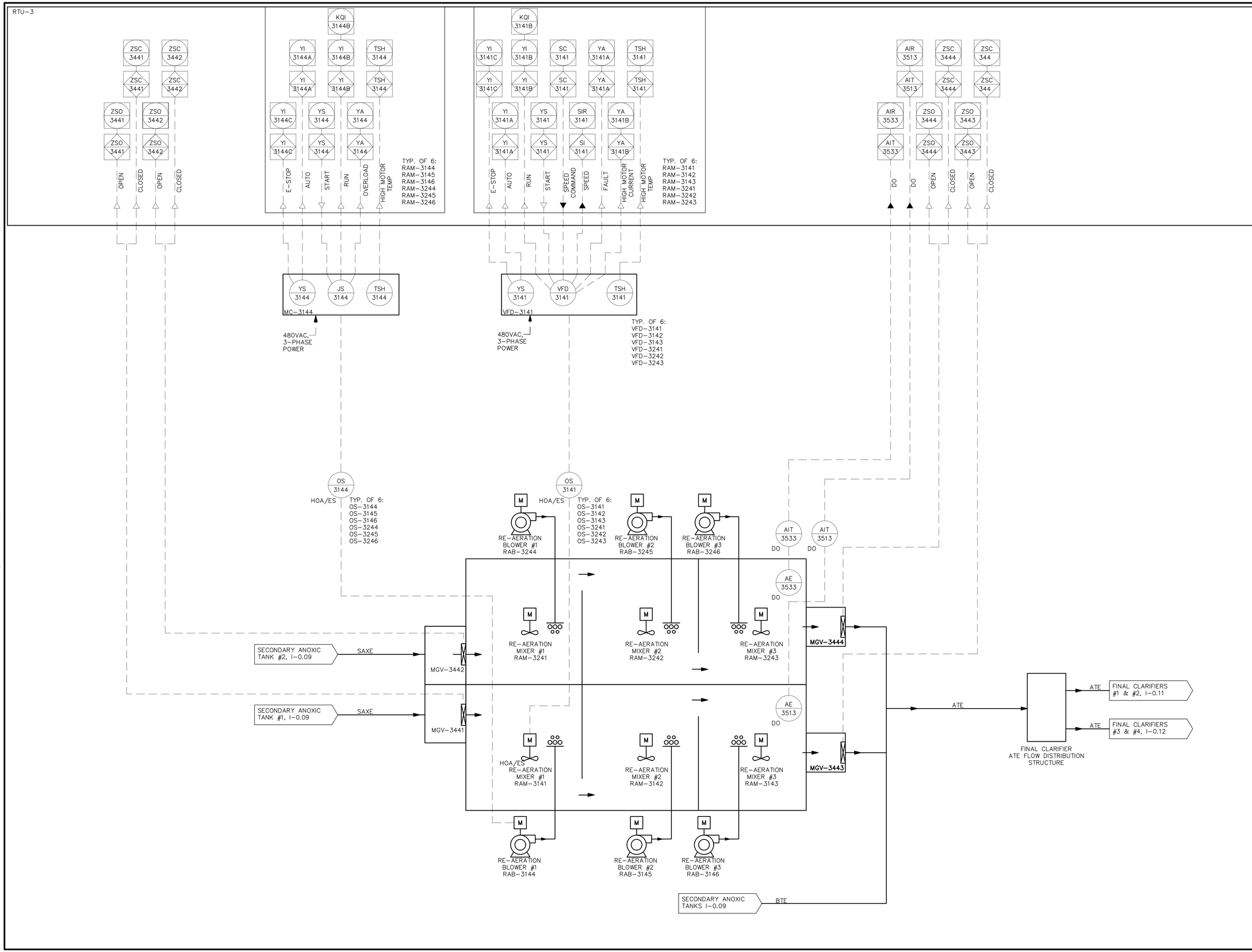

PREPARED BY

BETA
www.BETA-Inc.com

REGISTERED PROFESSIONAL

COMMONWEALTH OF MASSACHUSETTS
MICHAEL J. COTTER
ELECTRICAL
No. 40599
REGISTERED PROFESSIONAL ENGINEER

SUBCONSULTANT

SAR ENGINEERING, INC.

Mechanical/Electrical Engineers
150 Grossman Drive, Suite 309
Braintree, Massachusetts 02184
617 328-9215
web: www.sar.com

PROJECT

Taunton Wastewater Treatment Facility Improvements Phase 2

Taunton, MA

TITLE

INSTRUMENTATION & CONTROLS RE-AERATION TANKS

NO.	REVISIONS	DATE

DRAWN BY:	RB
DESIGNED BY:	MC
CHECKED BY:	MC
ISSUE DATE:	03/31/22
BETA JOB NO.:	6050

SCALE

NONE

UNLESS OTHERWISE NOTED OR CHANGED BY REPRODUCTION

SHEET NO. I-0.10

3/30/2022 3:43 PM W:\YEAR - 2018\18009.00 - TAUNTON WWTF UPGRADES\ELECTRICAL DEPARTMENT\PHASE 2\18009.00 I&C - P2.DWG (BETA STB BW.STB)

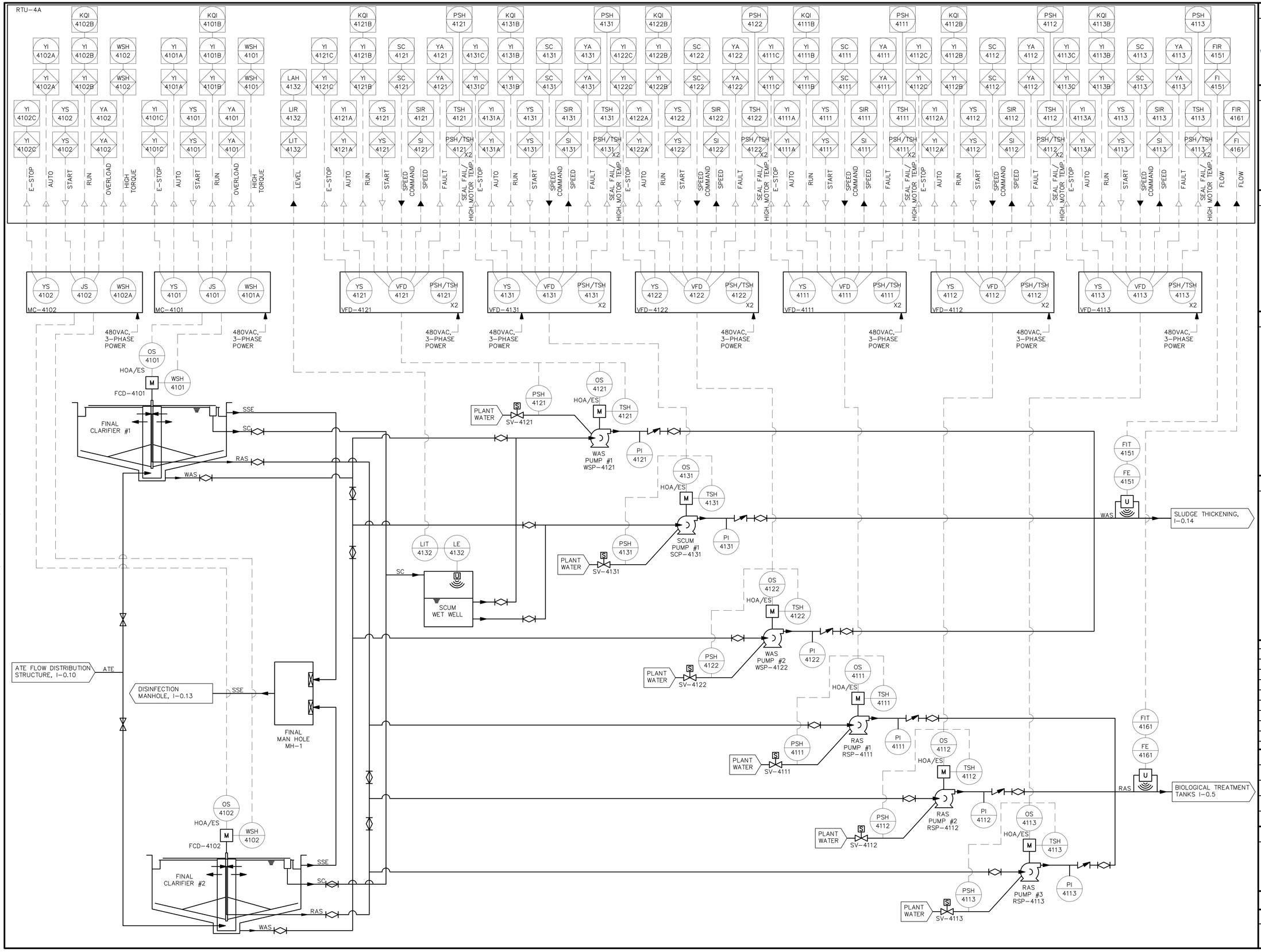

PREPARED BY

BETA
www.BETA-Inc.com

REGISTERED PROFESSIONAL

COMMONWEALTH OF MASSACHUSETTS
MICHAEL J. COTTER
ELECTRICAL
No. 40599
REGISTERED PROFESSIONAL ENGINEER

SUBCONSULTANT

SAR ENGINEERING, INC.

Mechanical/Electrical Engineers
150 Grossman Drive, Suite 309
Braintree, Massachusetts 02184
617 328-9215
web: www.sar.com

PROJECT

Taunton Wastewater Treatment Facility Improvements Phase 2

Taunton, MA

TITLE

INSTRUMENTATION & CONTROLS FINAL CLARIFIERS #1 & #2

NO.	REVISIONS	DATE

DRAWN BY:	RB
DESIGNED BY:	MC
CHECKED BY:	MC
ISSUE DATE:	03/31/22
BETA JOB NO.:	6050

SCALE

NONE

UNLESS OTHERWISE NOTED OR CHANGED BY REPRODUCTION

SHEET NO.

I-0.11

3/29/2022 2:22 PM W:\YEAR - 2018\18009.00 - TAUNTON WWTF UPGRADES\ELECTRICAL DEPARTMENT\PHASE 2\18009.00.I&C - P2.DWG (BETA STB BW.STB)

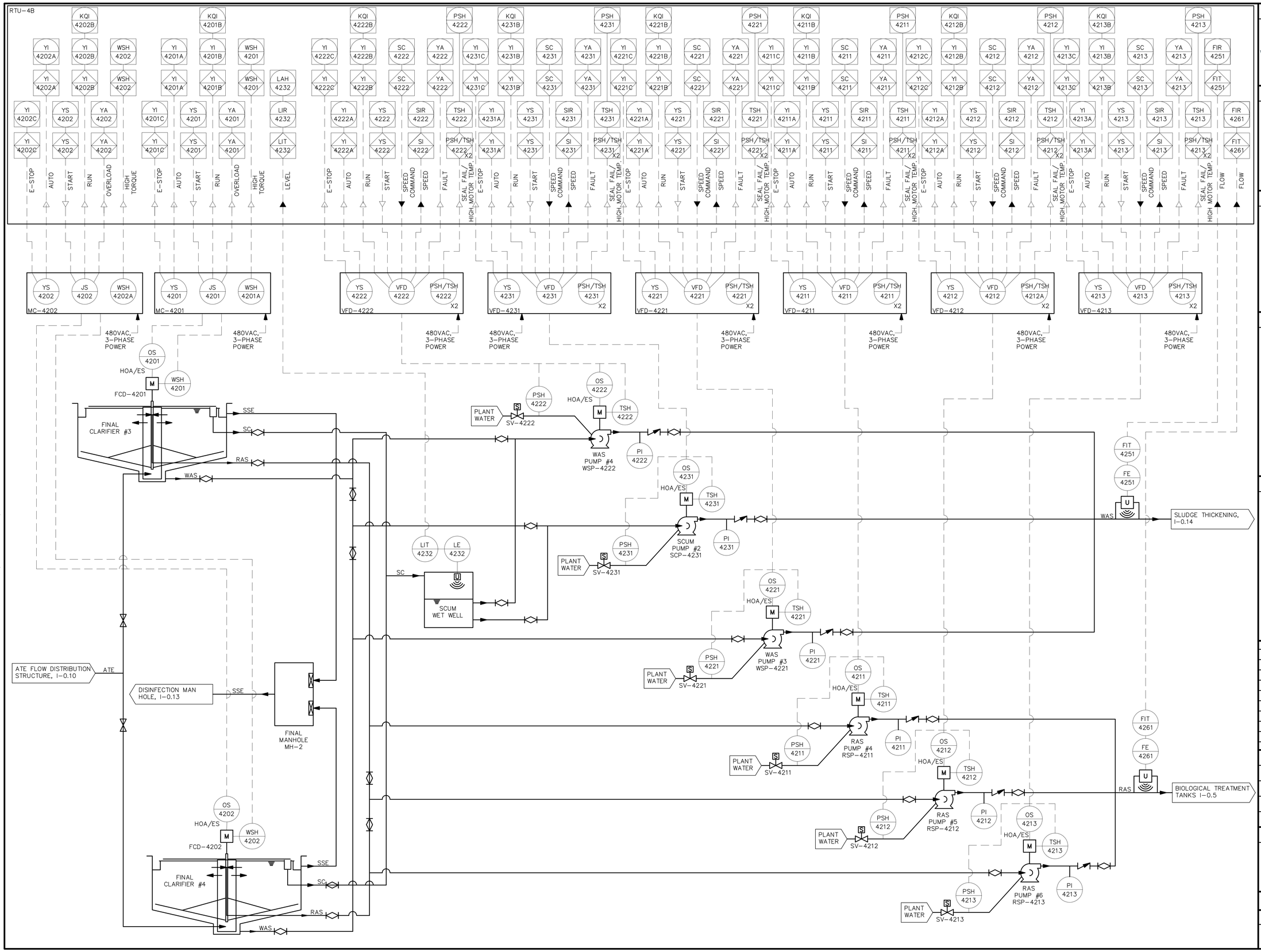

PREPARED BY

BETA
www.BETA-Inc.com

REGISTERED PROFESSIONAL

COMMONWEALTH OF MASSACHUSETTS
MICHAEL J. COTTER
ELECTRICAL
No. 40599
REGISTERED PROFESSIONAL ENGINEER

SUBCONSULTANT

SAR ENGINEERING, INC.
Mechanical/Electrical Engineers
150 Grossman Drive, Suite 309
Braintree, Massachusetts 02184
617 328-9215
web: www.sar.com

PROJECT

Taunton Wastewater Treatment Facility Improvements Phase 2

Taunton, MA

TITLE

INSTRUMENTATION & CONTROLS FINAL CLARIFIERS #3 & #4

NO.	REVISIONS	DATE

DRAWN BY:	RB
DESIGNED BY:	MC
CHECKED BY:	MC
ISSUE DATE:	03/31/22
BETA JOB NO.:	6050

SCALE

NONE

UNLESS OTHERWISE NOTED OR CHANGED BY REPRODUCTION

SHEET NO.

I-0.12

3/29/2022 2:22 PM W:\YEAR - 2018\18009.00 - TAUNTON WWTF UPGRADES\ELECTRICAL DEPARTMENT\PHASE 2\18009.00 I&C - P2.DWG (BETA STB BW.STB)

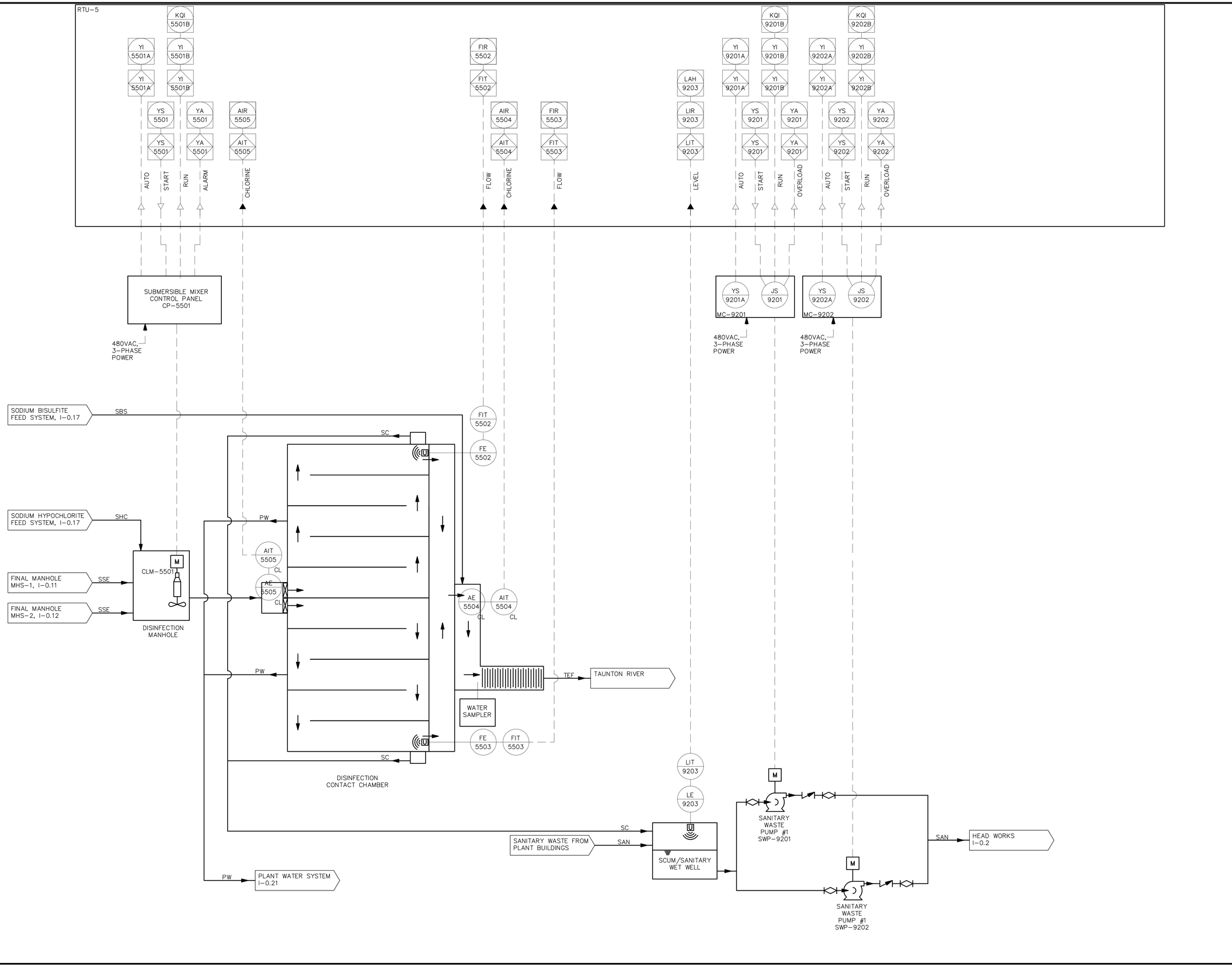

PREPARED BY

BETA
www.BETA-Inc.com

REGISTERED PROFESSIONAL

COMMONWEALTH OF MASSACHUSETTS
MICHAEL J. COTTER
ELECTRICAL
No. 40599
REGISTERED PROFESSIONAL ENGINEER

SUBCONSULTANT

SAR ENGINEERING, INC.

Mechanical/Electrical Engineers
150 Grossman Drive, Suite 309
Braintree, Massachusetts 02184
617 328-9215
web: www.sar.com

PROJECT

Taunton Wastewater Treatment Facility Improvements Phase 1

Taunton, MA

TITLE

INSTRUMENTATION & CONTROLS DISINFECTION

NO.	REVISIONS	DATE

DRAWN BY:	RB
DESIGNED BY:	MC
CHECKED BY:	MC
ISSUE DATE:	7/2/21
BETA JOB NO.:	6050

SCALE

AS SHOWN

UNLESS OTHERWISE NOTED OR CHANGED BY REPRODUCTION

SHEET NO.

I-0.13

3/29/2022 2:22 PM W:\YEAR - 2018\18009.00 - TAUNTON WWTF UPGRADES\ELECTRICAL DEPARTMENT\PHASE 2\18009.00 I&C - P2.DWG (BETA STB BW.STB)

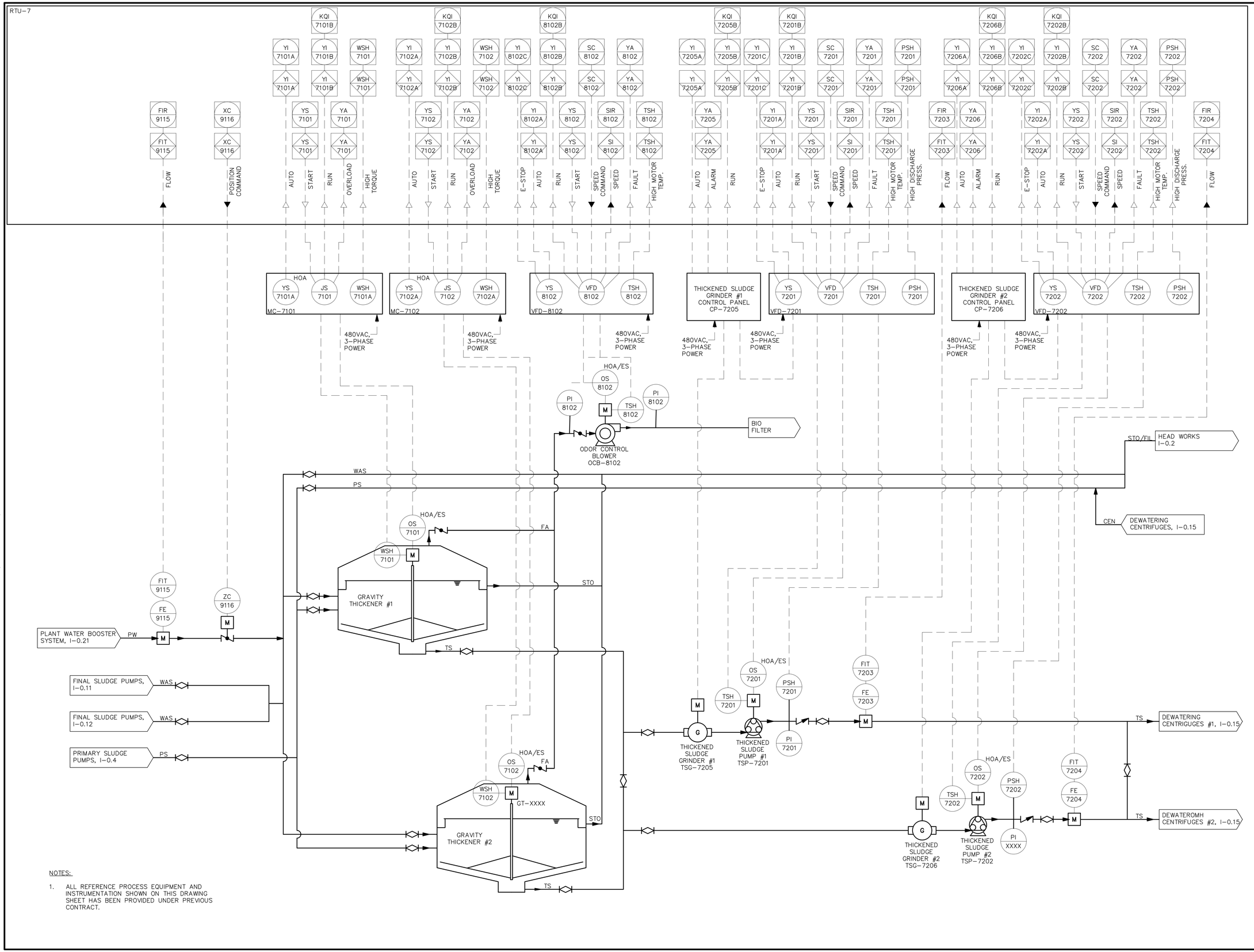

NOTES:

1. ALL REFERENCE PROCESS EQUIPMENT AND INSTRUMENTATION SHOWN ON THIS DRAWING SHEET HAS BEEN PROVIDED UNDER PREVIOUS CONTRACT.

PREPARED BY

BETA
www.BETA-Inc.com

REGISTERED PROFESSIONAL

COMMONWEALTH OF MASSACHUSETTS
MICHAEL J. COTTER
ELECTRICAL
No. 40599
REGISTERED PROFESSIONAL ENGINEER

SUBCONSULTANT

SAR ENGINEERING, INC.
Mechanical/Electrical Engineers
150 Grossman Drive, Suite 309
Braintree, Massachusetts 02184
617 328-9215
web: www.sar.com

PROJECT

Taunton Wastewater Treatment Facility Improvements Phase 1

Taunton, MA

TITLE

INSTRUMENTATION & CONTROLS SLUDGE THICKENING

NO.	REVISIONS	DATE

DRAWN BY:	RB
DESIGNED BY:	MC
CHECKED BY:	MC
ISSUE DATE:	7/2/21
BETA JOB NO.:	6050

SCALE

AS SHOWN

UNLESS OTHERWISE NOTED OR CHANGED BY REPRODUCTION

SHEET NO.

I-0.14

3/29/2022 2:23 PM W:\YEAR - 2018\18009.00 - TAUNTON WWTF UPGRADES\ELECTRICAL DEPARTMENT\PHASE 2\18009.00 I&C - P2.DWG (BETA STB BW.STB)

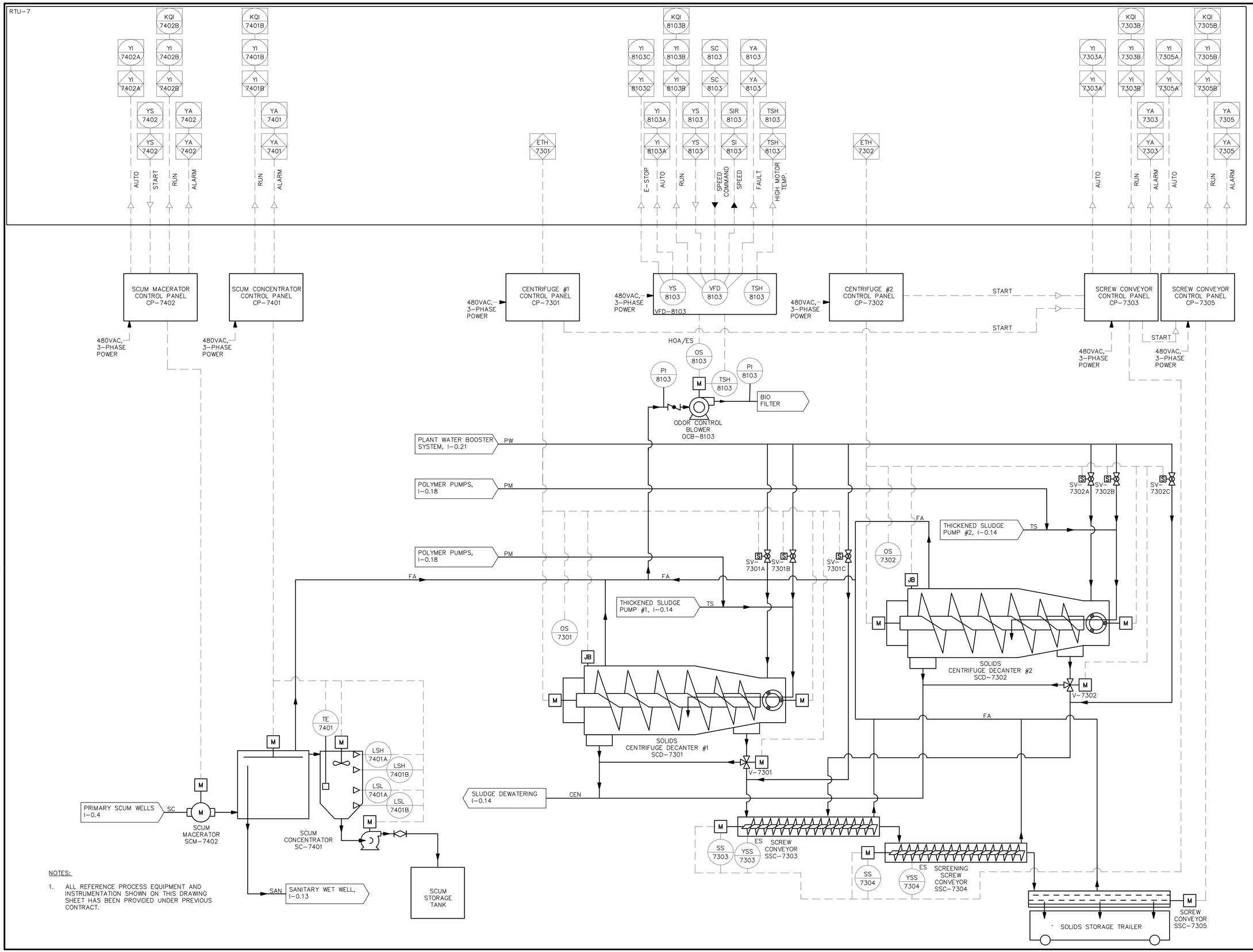

NOTES:

1. ALL REFERENCE PROCESS EQUIPMENT AND INSTRUMENTATION SHOWN ON THIS DRAWING SHEET HAS BEEN PROVIDED UNDER PREVIOUS CONTRACT.

PREPARED BY

BETA
www.BETA-Inc.com

REGISTERED PROFESSIONAL

COMMONWEALTH OF MASSACHUSETTS
MICHAEL J. COTTER
ELECTRICAL
No. 40599
REGISTERED PROFESSIONAL ENGINEER

SUBCONSULTANT

SAR ENGINEERING, INC.
Mechanical/Electrical Engineers
150 Grossman Drive, Suite 309
Braintree, Massachusetts 02184
617 328-9215
web: www.sar.com

PROJECT

Taunton Wastewater Treatment Facility Improvements Phase 1

Taunton, MA

TITLE

INSTRUMENTATION & CONTROLS DEWATERING

NO.	REVISIONS	DATE

DRAWN BY:	RB
DESIGNED BY:	MC
CHECKED BY:	MC
ISSUE DATE:	7/2/21
BETA JOB NO.:	6050

SCALE

AS SHOWN

UNLESS OTHERWISE NOTED OR CHANGED BY REPRODUCTION

SHEET NO.

I-0.15

3/29/2022 2:23 PM W:\YEAR - 2018\18009.00 - TAUNTON WWTF UPGRADES\ELECTRICAL DEPARTMENT\PHASE 2\18009.00 I&C - P2.DWG (BETA STB BW.STB)

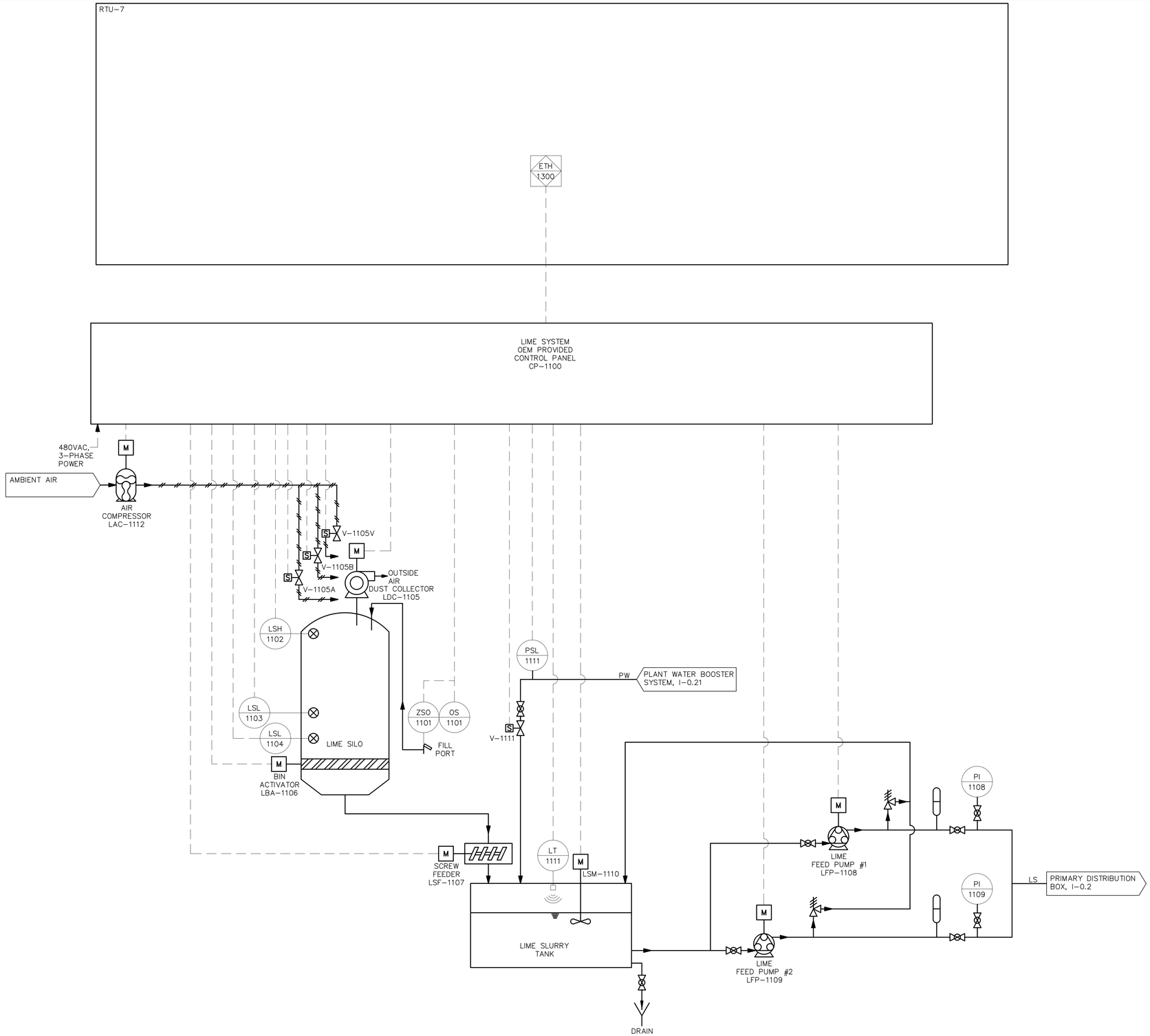

PREPARED BY

BETA
www.BETA-Inc.com

REGISTERED PROFESSIONAL

COMMONWEALTH OF MASSACHUSETTS
MICHAEL J. COTTER
ELECTRICAL
No. 40599
REGISTERED PROFESSIONAL ENGINEER

SUBCONSULTANT

SAR ENGINEERING, INC.
Mechanical/Electrical Engineers
150 Grossman Drive, Suite 309
Braintree, Massachusetts 02184
617 328-9215
web: www.sar.com

PROJECT

Taunton Wastewater Treatment Facility Improvements Phase 1

Taunton, MA

TITLE

INSTRUMENTATION & CONTROLS LIME SYSTEM

NO.	REVISIONS	DATE

DRAWN BY:	RB
DESIGNED BY:	MC
CHECKED BY:	MC
ISSUE DATE:	7/2/21
BETA JOB NO.:	6050

SCALE

AS SHOWN

UNLESS OTHERWISE NOTED OR CHANGED BY REPRODUCTION

SHEET NO. I-0.16

3/29/2022 2:23 PM W:\YEAR - 2018\18009.00 - TAUNTON WWTF UPGRADES\ELECTRICAL DEPARTMENT\PHASE 2\18009.00 I&C - P2.DWG (BETA STB BW.STB)

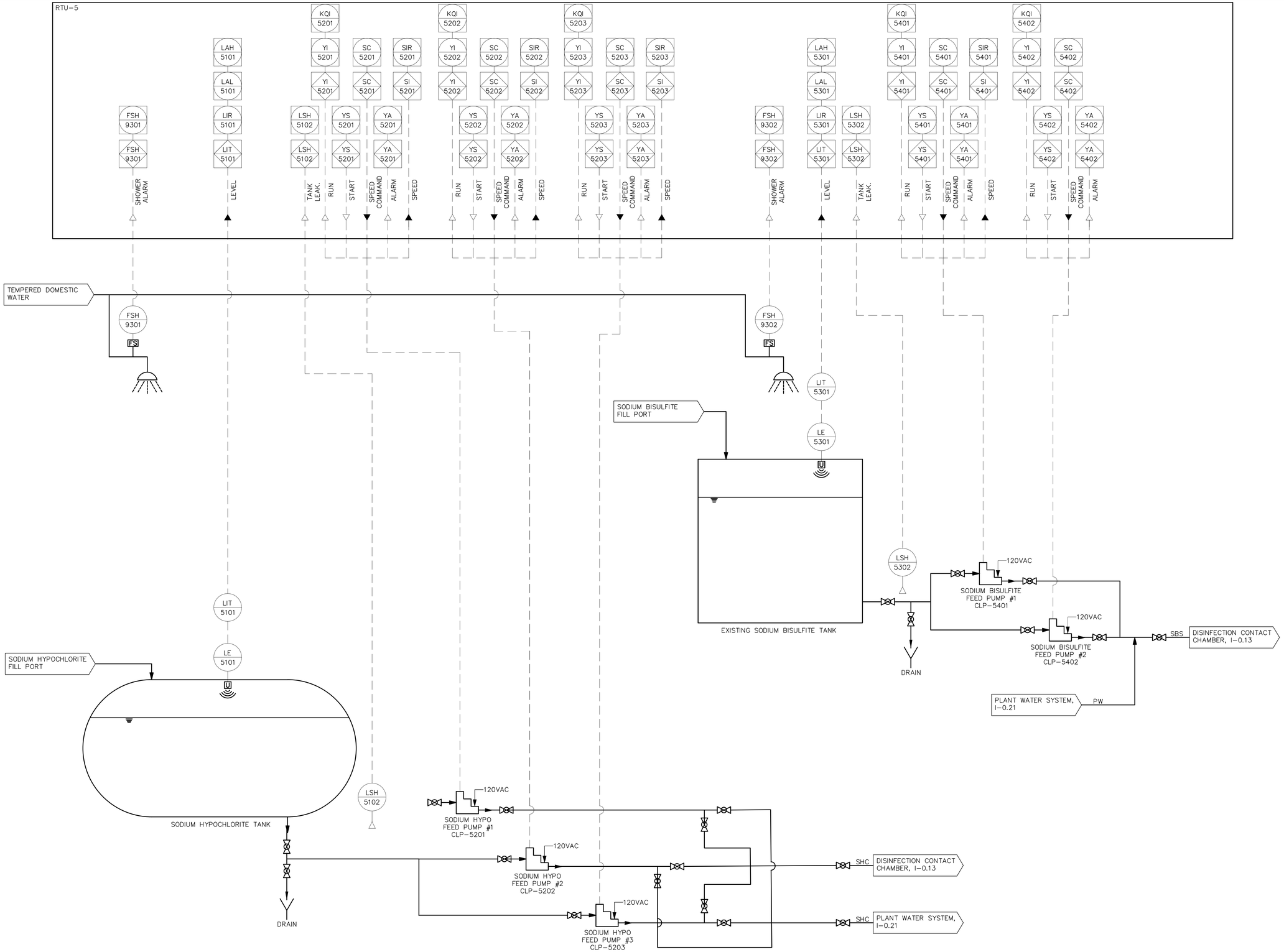

PREPARED BY

BETA
www.BETA-Inc.com

REGISTERED PROFESSIONAL

COMMONWEALTH OF MASSACHUSETTS
MICHAEL J. COTTER
ELECTRICAL
No. 40599
REGISTERED PROFESSIONAL ENGINEER

SUBCONSULTANT

SAR ENGINEERING, INC.

Mechanical/Electrical Engineers
150 Grossman Drive, Suite 309
Braintree, Massachusetts 02184
617 328-9215
web: www.sar.com

PROJECT

Taunton Wastewater Treatment Facility Improvements Phase 1

Taunton, MA

TITLE

INSTRUMENTATION & CONTROLS SODIUM HYPOCHLORITE & SODIUM BISULFITE SYSTEMS

NO.	REVISIONS	DATE

DRAWN BY:	RB
DESIGNED BY:	MC
CHECKED BY:	MC
ISSUE DATE:	7/2/21
BETA JOB NO.:	6050

SCALE

AS SHOWN

UNLESS OTHERWISE NOTED OR CHANGED BY REPRODUCTION

SHEET NO.

I-0.17

3/29/2022 2:23 PM W:\YEAR - 2018\18009.00 - TAUNTON WWTF UPGRADES\ELECTRICAL DEPARTMENT\PHASE 2\18009.00 I&C - P2.DWG (BETA STB BW.STB)

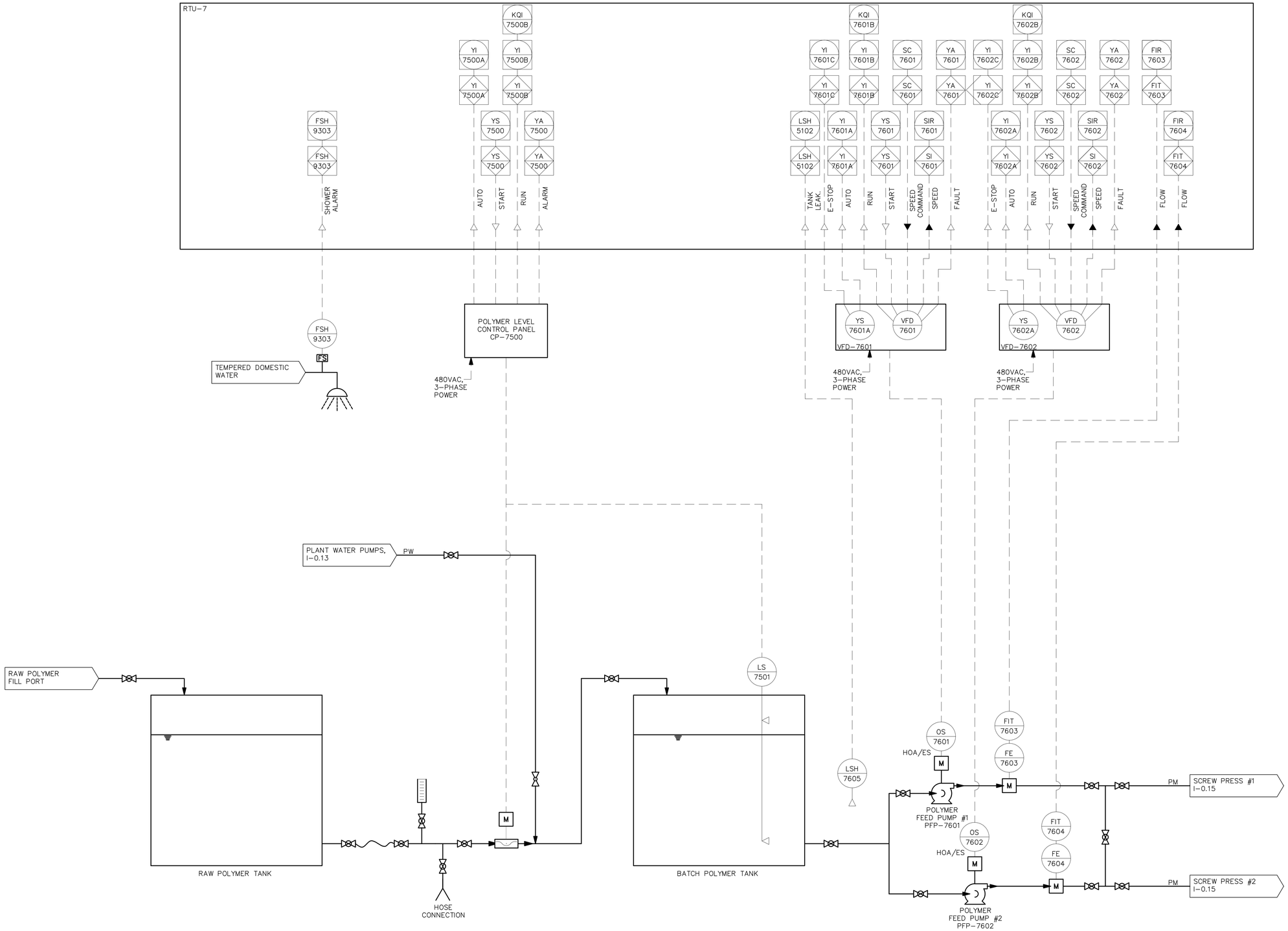

NOTES:

1. ALL REFERENCE PROCESS EQUIPMENT AND INSTRUMENTATION SHOWN ON THIS DRAWING SHEET HAS BEEN PROVIDED UNDER PREVIOUS CONTRACT.

PREPARED BY

BETA
www.BETA-Inc.com

REGISTERED PROFESSIONAL

COMMONWEALTH OF MASSACHUSETTS
MICHAEL J. COTTER
ELECTRICAL
No. 40599
REGISTERED PROFESSIONAL ENGINEER

SUBCONSULTANT

SAR ENGINEERING, INC.
Mechanical/Electrical Engineers
150 Grossman Drive, Suite 309
Braintree, Massachusetts 02184
617 328-9215
web: www.sar.com

PROJECT

Taunton Wastewater Treatment Facility Improvements Phase 1

Taunton, MA

TITLE

INSTRUMENTATION & CONTROLS POLYMER SYSTEM

NO.	REVISIONS	DATE

DRAWN BY:	RB
DESIGNED BY:	MC
CHECKED BY:	MC
ISSUE DATE:	7/2/21
BETA JOB NO.:	6050

SCALE

AS SHOWN

UNLESS OTHERWISE NOTED OR CHANGED BY REPRODUCTION

SHEET NO. I-0.18

3/29/2022 2:23 PM W:\YEAR - 2018\18009.00 - TAUNTON WWTF UPGRADES\ELECTRICAL DEPARTMENT\PHASE 2\18009.00 I&C - P2.DWG (BETA STB BW.STB)

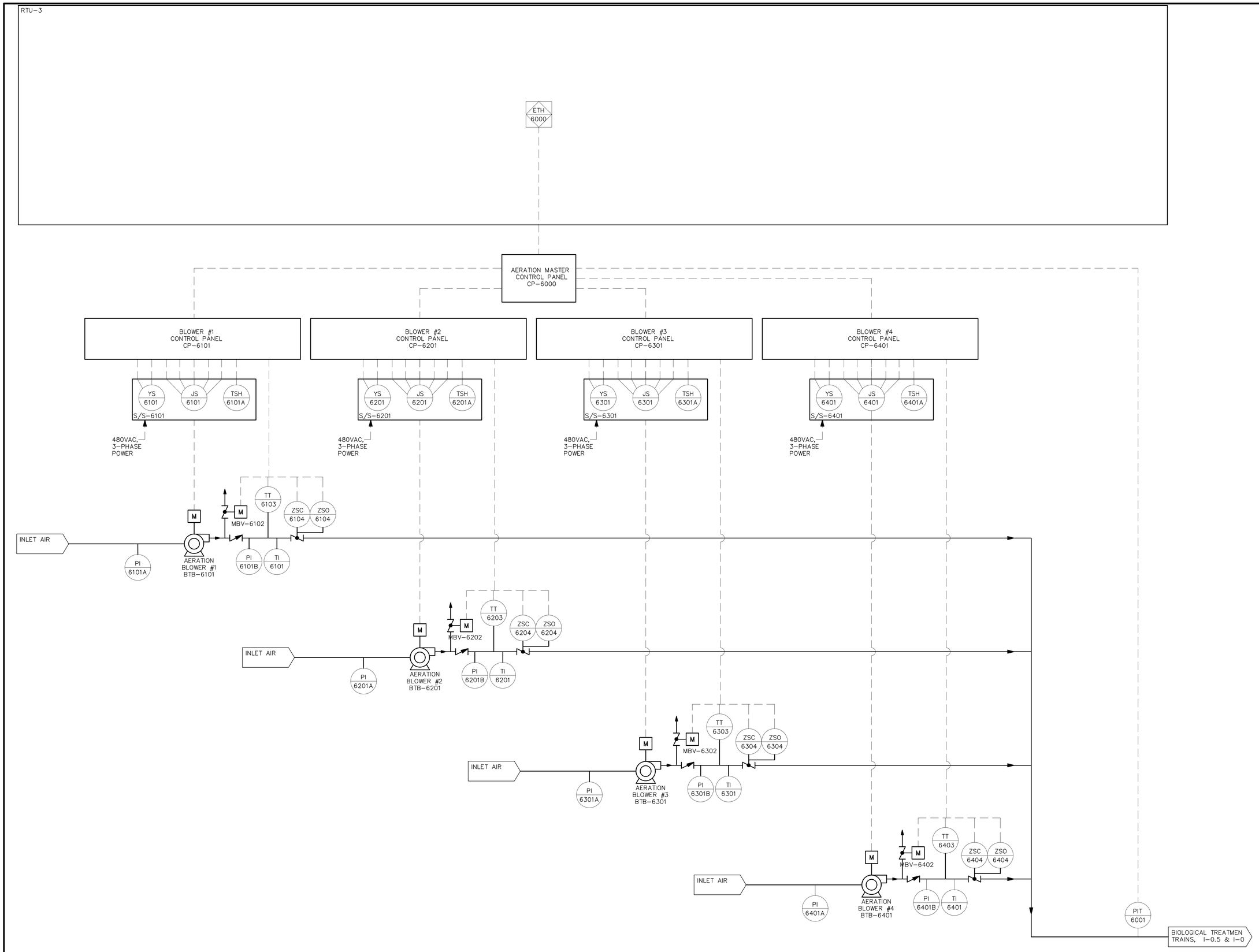

PREPARED BY

BETA
www.BETA-Inc.com

REGISTERED PROFESSIONAL

COMMONWEALTH OF MASSACHUSETTS
MICHAEL J. COTTER
ELECTRICAL
No. 40599
REGISTERED PROFESSIONAL ENGINEER

SUBCONSULTANT

SAR ENGINEERING, INC.
Mechanical/Electrical Engineers
150 Grossman Drive, Suite 309
Braintree, Massachusetts 02184
617 328-9215
web: www.sar.com

PROJECT

Taunton Wastewater Treatment Facility Improvements Phase 2

Taunton, MA

TITLE

INSTRUMENTATION & CONTROLS AERATION BLOWERS

NO.	REVISIONS	DATE

DRAWN BY:	RB
DESIGNED BY:	MC
CHECKED BY:	MC
ISSUE DATE:	03/31/22
BETA JOB NO.:	6050

SCALE

NONE

UNLESS OTHERWISE NOTED OR CHANGED BY REPRODUCTION

SHEET NO.

I-0.19

3/30/2022 3:44 PM W:\YEAR - 2018\18009.00 - TAUNTON WWTF UPGRADES\ELECTRICAL DEPARTMENT\PHASE 2\18009.00 I&C - P2.DWG (BETA STB BW.STB)

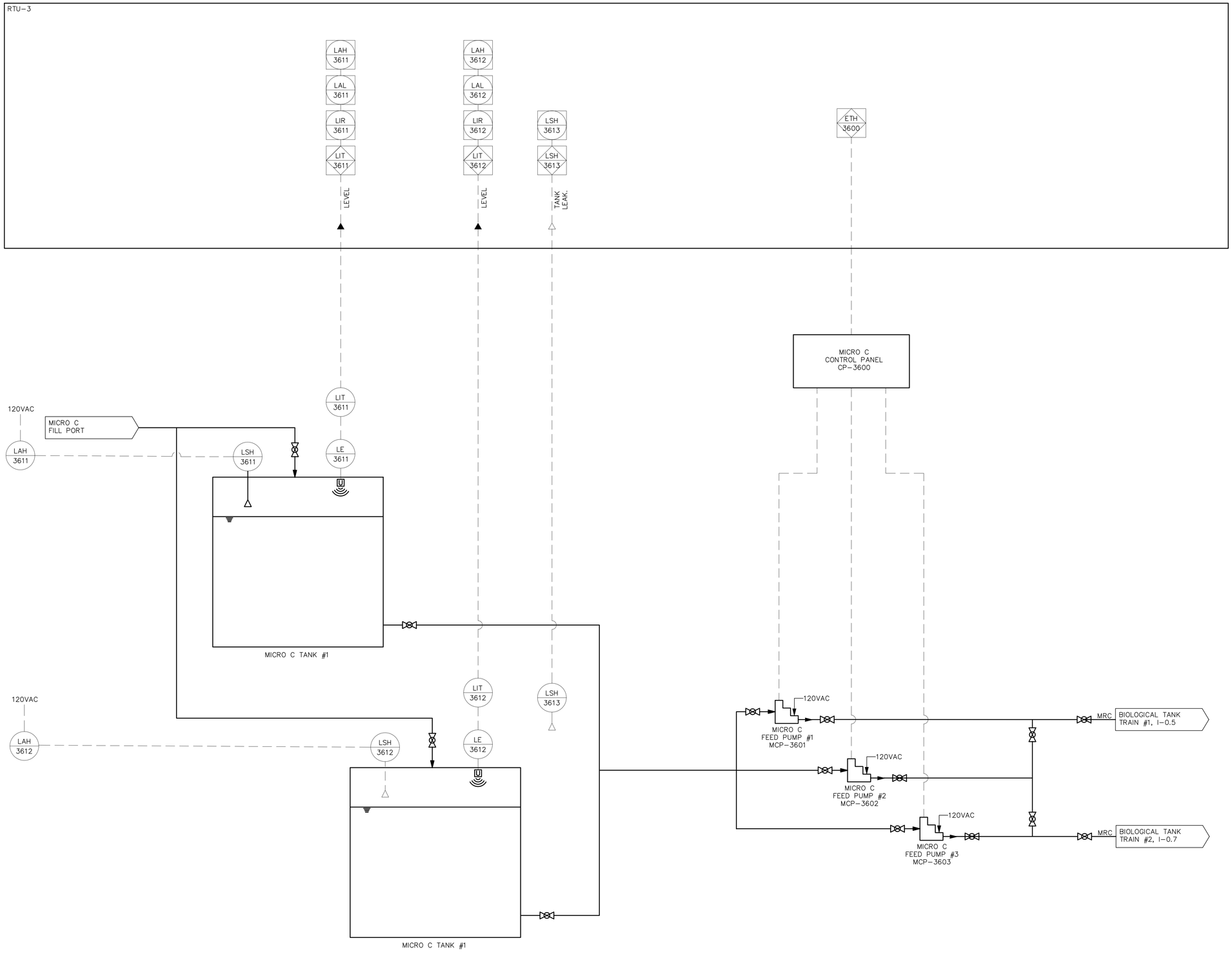

PREPARED BY

BETA
www.BETA-Inc.com

REGISTERED PROFESSIONAL

COMMONWEALTH OF MASSACHUSETTS
MICHAEL J. COTTER
ELECTRICAL
No. 40599
REGISTERED PROFESSIONAL ENGINEER

SUBCONSULTANT

SAR ENGINEERING, INC.

Mechanical/Electrical Engineers
150 Grossman Drive, Suite 309
Braintree, Massachusetts 02184
617 328-9215
web: www.sar.com

PROJECT

Taunton Wastewater Treatment Facility Improvements Phase 2

Taunton, MA

TITLE

INSTRUMENTATION & CONTROLS MICRO C SYSTEM

NO.	REVISIONS	DATE

DRAWN BY:	RB
DESIGNED BY:	MC
CHECKED BY:	MC
ISSUE DATE:	03/31/22
BETA JOB NO.:	6050

SCALE

NONE

UNLESS OTHERWISE NOTED OR CHANGED BY REPRODUCTION

SHEET NO. I-0.20

3/29/2022 2:24 PM W:\YEAR - 2018\18009.00 - TAUNTON WWTF UPGRADES\ELECTRICAL DEPARTMENT\PHASE 2\18009.00 I&C - P2.DWG (BETA STB BW.STB)

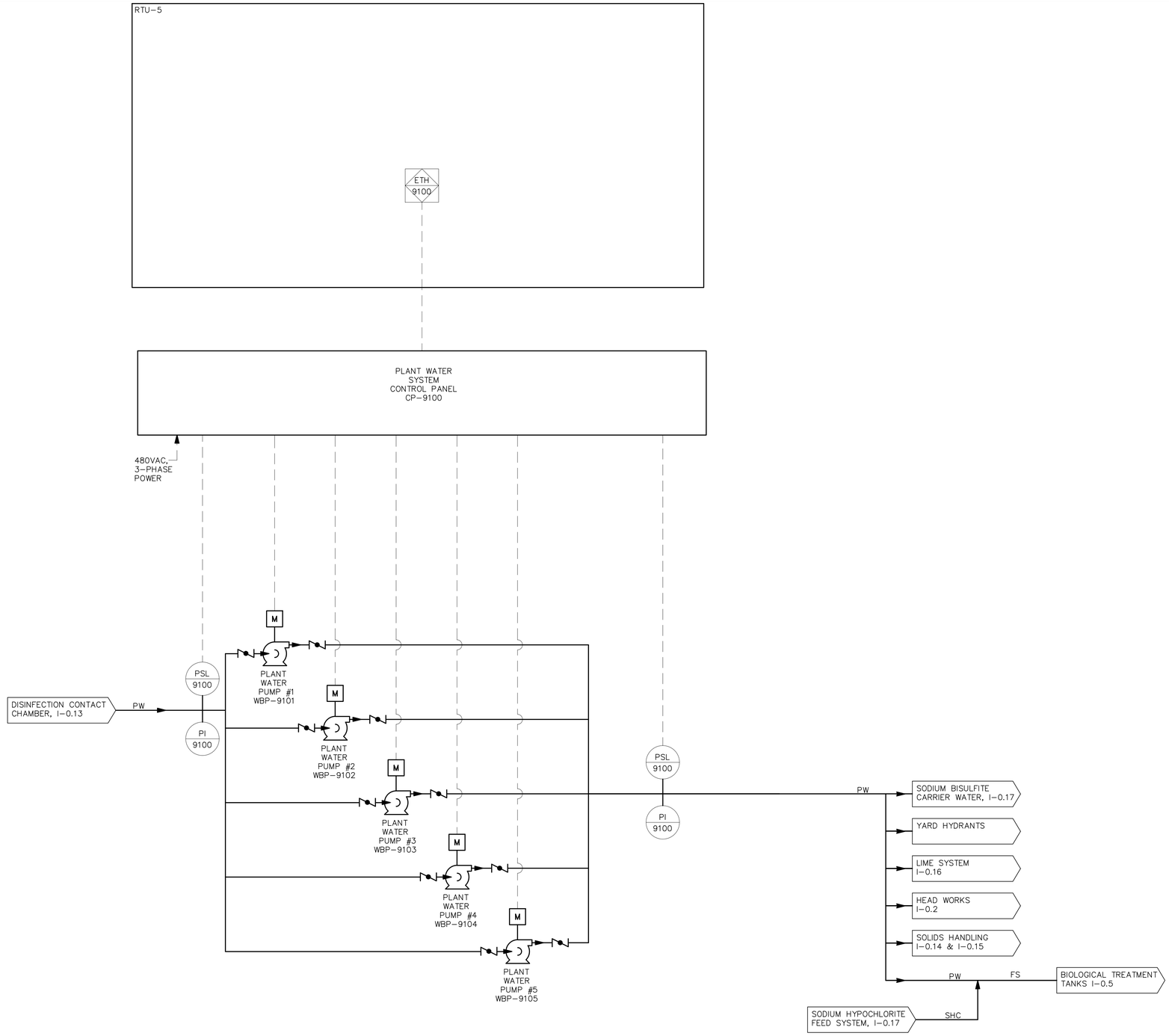

PREPARED BY

BETA
www.BETA-Inc.com

REGISTERED PROFESSIONAL

COMMONWEALTH OF MASSACHUSETTS
MICHAEL J. COTTER
ELECTRICAL
No. 40599
REGISTERED PROFESSIONAL ENGINEER

SUBCONSULTANT

SAR
ENGINEERING, INC.

Mechanical/Electrical Engineers
150 Grossman Drive, Suite 309
Braintree, Massachusetts 02184
617 328-9215
web: www.sar.com

PROJECT

Taunton Wastewater Treatment Facility Improvements Phase 1

Taunton, MA

TITLE

INSTRUMENTATION & CONTROLS PLANT WATER

NO.	REVISIONS	DATE

DRAWN BY:	RB
DESIGNED BY:	MC
CHECKED BY:	MC
ISSUE DATE:	7/2/21
BETA JOB NO.:	6050

SCALE

AS SHOWN

UNLESS OTHERWISE NOTED OR CHANGED BY REPRODUCTION

SHEET NO.

I-0.21

3/29/2022 2:24 PM W:\YEAR - 2018\18009.00 - TAUNTON WWTF UPGRADES\ELECTRICAL DEPARTMENT\PHASE 2\18009.00 I&C - P2.DWG (BETA STB BW.STB)

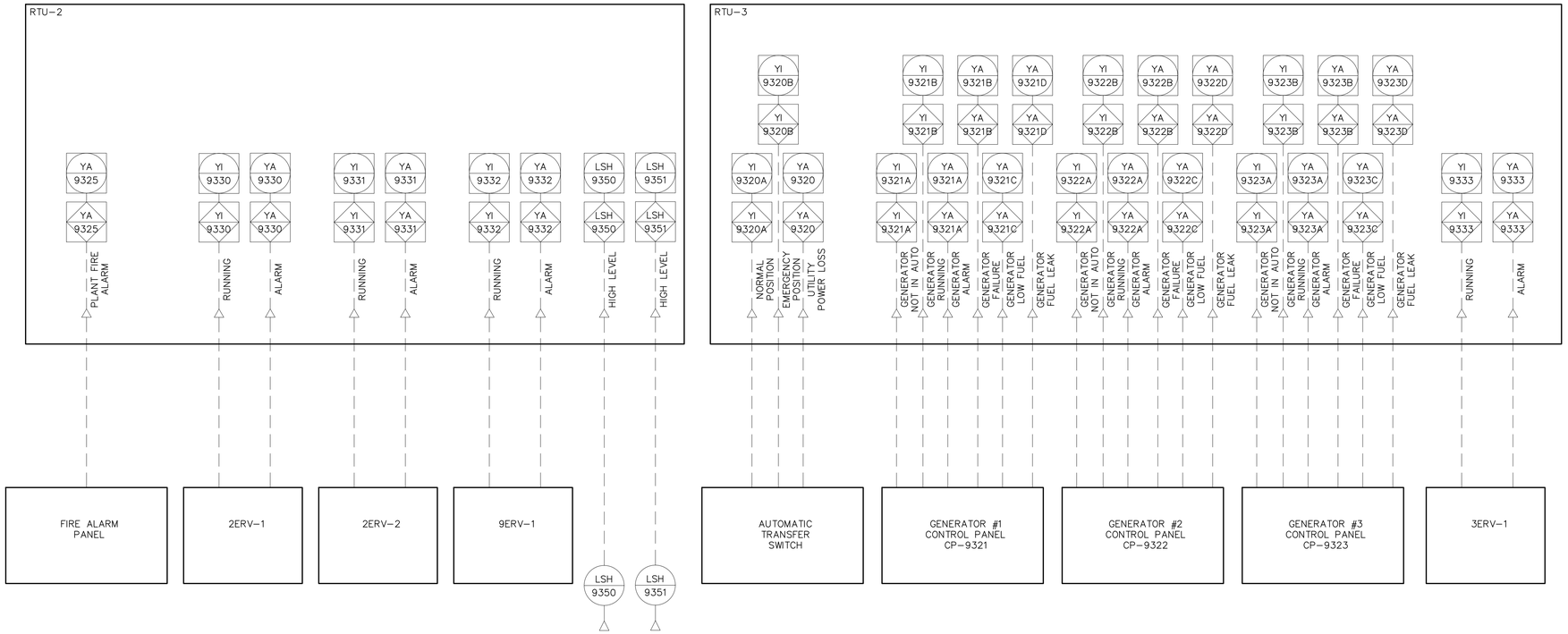

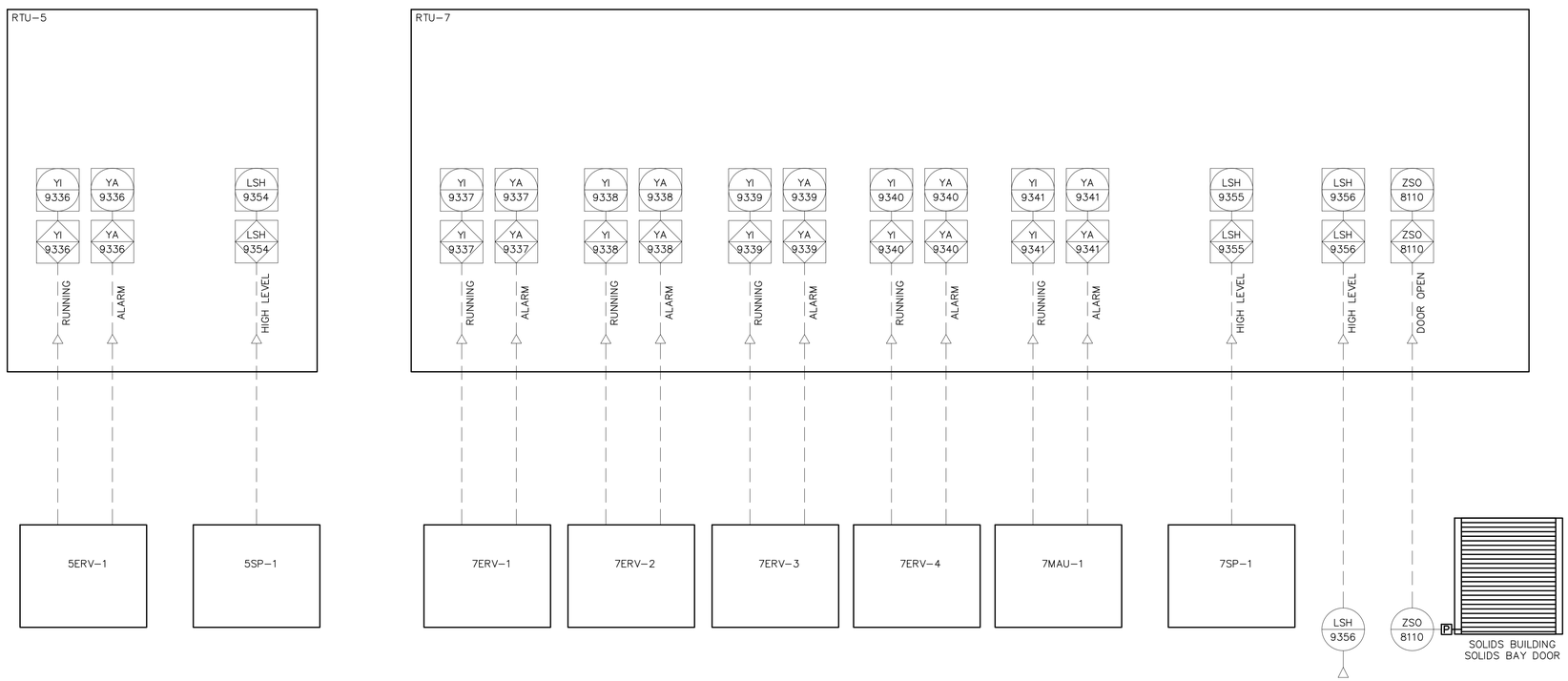

PREPARED BY

BETA
www.BETA-Inc.com

REGISTERED PROFESSIONAL

COMMONWEALTH OF MASSACHUSETTS
MICHAEL J. COTTER
ELECTRICAL
No. 40599
REGISTERED PROFESSIONAL ENGINEER

SUBCONSULTANT

SAR ENGINEERING, INC.
Mechanical/Electrical Engineers
150 Grossman Drive, Suite 309
Braintree, Massachusetts 02184
617 328-9215
web: www.sar.com

PROJECT

Taunton Wastewater Treatment Facility Improvements Phase 1

Taunton, MA

TITLE

INSTRUMENTATION & CONTROLS HVAC & PLUMBING SYSTEMS

NO.	REVISIONS	DATE

DRAWN BY:	RB
DESIGNED BY:	MC
CHECKED BY:	MC
ISSUE DATE:	7/2/21
BETA JOB NO.:	6050

SCALE

AS SHOWN

UNLESS OTHERWISE NOTED OR CHANGED BY REPRODUCTION

SHEET NO. I-0.22

3/29/2022 2:24 PM W:\YEAR - 2018\18009.00 - TAUNTON WWTF UPGRADES\ELECTRICAL DEPARTMENT\PHASE 2\18009.00 I&C - P2.DWG (BETA STB.BW.STB)

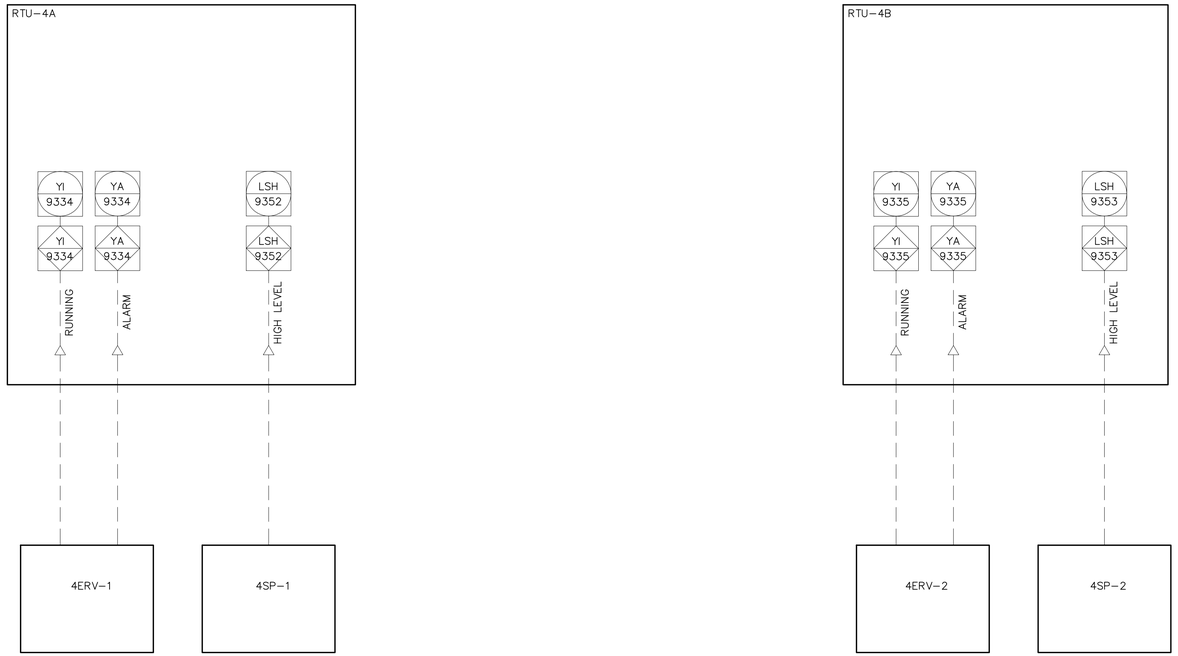

PREPARED BY

BETA
www.BETA-Inc.com

REGISTERED PROFESSIONAL

COMMONWEALTH OF MASSACHUSETTS
MICHAEL J. COTTER
ELECTRICAL
No. 40599
REGISTERED PROFESSIONAL ENGINEER

SUBCONSULTANT

SAR ENGINEERING, INC.
Mechanical/Electrical Engineers
150 Grossman Drive, Suite 309
Braintree, Massachusetts 02184
617 328-9215
web: www.sar.com

PROJECT

Taunton Wastewater Treatment Facility Improvements Phase 2

Taunton, MA

TITLE

INSTRUMENTATION & CONTROLS HVAC & PLUMBING SYSTEMS

NO.	REVISIONS	DATE

DRAWN BY:	RB
DESIGNED BY:	MC
CHECKED BY:	MC
ISSUE DATE:	03/31/22
BETA JOB NO.:	6050

SCALE

NONE

UNLESS OTHERWISE NOTED OR CHANGED BY REPRODUCTION

SHEET NO. I-0.23

3/29/2022 2:25 PM W:\YEAR - 2018\18009.00 - TAUNTON WWTF UPGRADES\ELECTRICAL DEPARTMENT\PHASE 2\18009.00 I&C - P2.DWG (BETA STB BW.STB)

ELECTRICAL SYMBOLS

F1 1 a	LINEAR LIGHTING FIXTURES "F1" INDICATES FIXTURE TYPE – TYPICAL FOR ALL FIXTURES "1" INDICATES CIRCUIT NUMBER – TYPICAL FOR ALL FIXTURE "a" INDICATES THE SWITCH CONTROL – TYPICAL FOR ALL FIXTURES
	WALL MOUNTED LIGHTING FIXTURE.
	SURFACE OR PENDANT MOUNTED FIXTURE.
	POLE MOUNTED SITE LIGHT FIXTURE
	EMERGENCY EXIT SIGN
	EMERGENCY LIGHTING BATTERY UNIT WITH TWO LIGHT HEADS
	REMOTE EMERGENCY LIGHTING UNIT WITH TWO LIGHTING HEADS PROVIDE 3/4", 2#10, 1#10GND TO NEAREST THE EMEGENCY LIGHTING BATTERY UNIT
S_a^{WP}	SINGLE POLE SWITCH 120V, 20A "a" INDICATES THE SWITCH CONTROL, "WP" INDICATES WITH WEATHERPROOF COVER
S_2	2–POLE SWITCH 120V, 20A 1 POLE FOR ROOM LIGHT FIXTURES, 1–POLE FOR EXHAUST FAN CONTROL
S_{3a}	3–WAY SWITCH 120V, 20A "a" INDICATES THE SWITCH CONTROL
S_{4a}	4–WAY SWITCH 120V, 20A "a" INDICATES THE SWITCH CONTROL
TC	DIGITAL TIME CLOCK SWITCH
TM	MECHANICAL TIMER SWITCH
OC	WALL MOUNTED DUAL TECHNOLOGY OCCUPANCY SENSOR/SWITCH
S	LOW VOLTAGE SWITCH
OC	CEILING MOUNTED DUAL TECHNOLOGY OCCUPANCY SENSOR
LCP	LIGHTING CONTROL PANEL
1_1	DUPLEX RECEPTACLE, WEATHER–RESISTANT 120V, 20A WITH WEATHERPROOF COVER "1" INDICATES CIRCUIT NUMBER – TYPICAL FOR ALL RECEPTACLES
^{GF}	DUPLEX RECEPTACLE, 120V, 20A "GF" INDICATES GROUND FAULT TYPE RECEPTACLE
^{WP}	(2) DUPLEX (QUAD) RECEPTACLES, 120V, 20A "WP" INDICATES WITH WEATHERPROOF COVER
^{WP}	SIMPLEX RECEPTACLE, WP INDICATES WEATHER RESISTANT 120V, 20A UNFUSED DISCONNECT SWITCH, "30" INDICATES 30 AMP RATING, PROVIDE 3–POLE "WP" INDICATES WITH WEATHERPROOF COVER
$_{30}$	UNLESS OTHERWISE INDICATED.
F_{20}	FUSED DISCONNECT SWITCH, "20" INDICATES 20 AMP FUSE RATING, PROVIDE 3–POLE UNLESS OTHERWISE INDICATED.
	3–PHASE RECEPTACLE
MCP FVNR	WALL MOUNTED COMBINATION MOTOR STARTER WITH MOTOR CIRCUIT PROTECTOR, "FVNR" INDICATES TYPE OF MOTOR STARTER
MCP FVNR	MOTOR STARTER WITH MOTOR CIRCUIT PROTECTOR, "FVNR" INDICATES TYPE OF MOTOR STARTER
VFD	ENCLOSED VARIABLE FREQUENCY DRIVE
Sm	MANUAL MOTOR STARTER 120V, 20A
J J	JUNCTION BOX
HH	POLYMER CONCRETE HAND HOLE
AR1	ALARM RELAY, "AR1" REFERS TO RELAY NAME DESIGNATION
CR1	CONTROL RELAY, "CR1" REFERS TO RELAY NAME DESIGNATION
M	MOTOR START RELAY
TR1	TIMING RELAY, "TR1" REFERS TO RELAY NAME DESIGNATION
	NORMALY OPEN RELAY CONTACT
	NORMALLY CLOSED RELAY CONTACT
	OPERATOR PUSH BUTTON NORMALLY OPEN CONTACT
	OPERATOR PUSH BUTTON NORMALLY CLOSED CONTACT
	PRESSURE SWITCH – CLOSES ON HIGH PRESSURE
	PRESSURE SWITCH – CLOSES ON LOW PRESSURE

ELECTRICAL SYMBOLS

	UNDERGROUND CONDUIT DUCT BANK
PP1(1)	HOMERUN DESIGNATION TO PANEL PP1 CIRCUIT #1, WITH THE FOLOWING CONDUIT/WIRES UNLESS OTHERWISE NOTED: • 3/4"C WITH 2#12, 1#12GND FOR 20AMP SINGLE PHASE CIRCUITS. • 3/4"C WITH 3#12, 1#12GND FOR 20AMP THREE PHASE CIRCUITS. • 3/4"C WITH 2#10, 1#10GND FOR 30AMP SINGLE PHASE CIRCUITS. • 3/4"C WITH 3#10, 1#10GND FOR 30AMP THREE PHASE CIRCUITS. • 3/4"C WITH 2#8, 1#10GND FOR 40AMP & 50AMP SINGLE PHASE CIRCUITS. • 3/4"C WITH 3#8, 1#10GND FOR 40AMP & 50AMP THREE PHASE CIRCUITS.
	EYS TYPE CONDUIT SEAL
SPD	SURGE PROTECTION DEVICE
GFM	GROUND FAULT MONITOR AND INDICATION LIGHT
KWH	KILOWATT HOUR DEMAND METER
	UTILITY POLE
20 100 LSIG	MOLDED CASE CIRCUIT BREAKER, 3–POLE UNLESS OTHERWISE INDICATED, "20" INDICATES TRIP AMPERE RATING, "100" INDCATES FRAME SIZE, "LSIG" LONG, SHORT, INSTANTANEOUS AND GROUND FAULT PROTECTION RESPECTIVELY
	DRY TYPE TRANSFORMER
EH	CONCRETE HAND HOLE (REFER TO SITE DETAILS)
	3/4"ø X 10'–0" COPPER CLAD GROUND ROD
	BUILDING GROUNDING SYSTEM
10	MOTOR, "10" INDICATES HORSEPOWER RATING
XX	CABLE/CONDUIT DESIGNATION, "XX" REFERS CABLE CONDUIT REFERENCE, REFER TO CABLE/CONDUIT SCHEDULES.
OS–XXXX YYY	OPERATOR STATION (SUPPLIED BY OTHER DIV. 16 UNO), "XXXX" REFERS TO TAGNAME ID, "YYY" REFERS TO THE TYPE OF OPERATOR STATION
XX–XXXX	UNLESS OTHERWISE NOTED INSTRUMENATION OR PROCESS EQUIPMENT (SUPPLIED BY OTHER DIVISIONS) "XX–XXXX" REFERS TO TAGNAME ID
E	GENERATOR EMERGENCY STOP, PROVIDE WITH 3 SEPARATE NORMALLY CLOSED CONTACTS
O	OCCUPIED/UNOCCUPIED SELECTOR SWITCH. (SUPPLIED BY DIV. 16)
T	THERMOSTAT (SUPPLIED BY DIV. 15)
M	MOTOR OPERATED DAMPER (SUPPLIED BY DIV. 15)
F XKW	ELECTRIC UNIT HEATER, "X" INDICATES UNIT ELECTRIC COIL RATING (SUPPLIED BY DIV. 15)
CUH 1 P11–LP (21)	EQUIPMENT CIRCUIT NUMBER DESIGNATION TO PANEL PP1–LP CIRCUIT #21,

TELE/DATA LEGEND

1T 2D	WALL MOUNTED DATA OUTLET, 2D INDICATES (2) CAT6 TERMINAL DATA CONNECTORS, 1T INDICATES (1) CAT6 TERMINAL TELEPHONE CONNECTOR
WAP	CEILING MOUNTED WIRELESS ACCESS POINT WITH (1) CAT6 CABLE

DEMOLITION NOTES

1. UNLESS OTHERWISE NOTED, ALL EXISTING ELECTRICAL SYSTEMS WITHIN HATCH MARKS (POWER, LIGHTING, LOW VOLTAGE, CONTROLS, ETC) AND ASSOCIATED EQUIPMENT IS TO BE DEMOLISHED OR SALVAGED. DISCONNECT AND DE–ENERGIZE THE EQUIPMENT. REMOVE THE EQUIPMENT TO BE DEMOLISHED OR SALVAGED PER SECTION 02050. ALL CONTROL DEVICES, CONDUIT, CABLING, BOXES, SUPPORTS, ETC, ASSOCIATED WITH THE DEMOLISHED EQUIPMENT SHALL BE REMOVED. THE CONDUIT AND CABLING SHALL BE REMOVED BACK TO SOURCE.
2. NO DEVICE OR EQUIPMENT INDICATED FOR DEMOLITION WILL BE REUSED OR SALVAGED UNLESS SPECIFICALLY NOTED AS SUCH. ALL EQUIPMENT REMOVED SHALL BE REMOVED FROM SITE AND PROPERLY DISPOSED OF, PRIOR TO REMOVAL OF EQUIPMENT COORDINATE WITH OWNER FOR ANY EQUIPMENT THE OWNER WILL KEEP.
3. EXISTING EQUIPMENT INDICATED ON THE DEMOLITION PLANS ARE BASED ON SITE OBSERVATIONS AND IT IS NOT THE INTENTION OF THESE DRAWINGS TO SHOW ALL EQUIPMENT AND MATERIALS TO BE DISCONNECTED AND/OR REMOVED.
4. DEMOLITION ONE LINE DIAGRAMS ONLY INDICATE CURRENT ACTIVE EQUIPMENT AND DO NOT INDICATE ABANDONED EQUIPMENT NO LONGER IN SERVICE. DEMOLITION PLAN DRAWINGS INDICATE BOTH ACTIVE AND ABANDONED EQUIPMENT THAT IS REQUIRED TO BE DEMOLISHED.
5. RING OUT CIRCUITS PRIOR TO DEMOLITION TO DETERMINE ACTIVE CIRCUITS AND DEMOLISH ACTIVE CIRCUITS IN ACCORDANCE TO PHASING PLAN.

ELECTRICAL SYMBOLS

GDC	GAS DETECTION SYSTEM – CONTROL PANEL (SUPPLIED BY DIV. 17)
GD	GAS DETECTION SYSTEM – GAS SENSOR DETECTOR (SUPPLIED BY DIV. 17)
A	GAS DETECTION SYSTEM – AMBER ALARM BEACON (SUPPLIED BY DIV. 17)
H	GAS DETECTION SYSTEM – ALARM HORN (SUPPLIED BY DIV.17)

FIRE ALARM SYSTEM SYMBOLS

F	MANUAL FIRE ALARM STATION
F	FIRE ALARM AUDIO/VISUAL DEVICE
F V	FIRE ALARM VISUAL ONLY DEVICE
	FIRE ALARM BEACON
S	SMOKE DETECTOR
S D	DUCT SMOKE DETECTOR
RTS	REMOTE TEST STATION AND ALARM FOR DUCT SMOKE DETECTOR
H	HEAT DETECTOR, COMBINATION RATE–OF–RISE AND FIXED TEMPERATURE
C	CARBON MONOXIDE DETECTOR
M	INPUT MONITORING MODULE
C	RELAY CONTROL MODULE
FACP	FIRE ALARM CONTROL PANEL
FAA	FIRE ALARM ANNUNCIATOR PANEL
	REMOTE ALARM INDICATING LIGHT
E	MASTER BOX
K	KEY DEPOSITORY – KNOX BOX

GENERAL NOTES

1. GENERAL CONTRACTOR TO PROVIDE CONCRETE HOUSEKEEPING AND MOUNTING PADS ON ALL FLOOR AND GRADE MOUNTED ELECTRICAL EQUIPMENT, THE FOLLOWING EQUIPMENT IS THE MINIMUM REQUIREMENT FOR PADS. ADDITIONAL PADS MAYBE REQUIRED BASED ON THE ELECTRICAL CONTRACTORS MOUNTING METHODS, ELECTRICAL CONTRACTOR SHALL COORDINATE WITH GENERAL CONTRACTOR FOR ALL PAD SIZES AND LOCATIONS.
   1.1. OIL FILLED TRANSFORMER
   1.2. SWITCHBOARDS
   1.3. GENERATOR
   1.4. DISTRIBUTION PANELBOARDS
   1.5. DRY TYPE TRANSFORMERS
   1.6. FREE STANDING VFDS AND CONTROL PANELS
2. ALL CONDUIT AND EQUIPMENT SHALL BE INSTALLED AND GROUNDED IN ACCORDANCE WITH THE LATEST EDITION OF THE NATIONAL ELECTRICAL CODE AND APPLICABLE LOCAL CODES.
3. BONDING JUMPERS, CONDUIT CLAMPS AND POINTS OF ATTACHMENT ARE NOT SHOWN ON DRAWINGS. SIZE BONDING JUMPERS IN ACCORDANCE WITH THE NATIONAL ELECTRICAL CODE. THE POINTS OF ATTACHMENT OF THE GROUND CLAMPS SHALL BE ACCESSIBLE LOCATIONS.
4. EQUIPMENT & CONDUIT INSTALLATIONS ARE SHOWN DIAGRAMMATICALLY ONLY AND SHALL BE INSTALLED IN A MANNER TO PREVENT CONFLICTS WITH EQUIPMENT AND STRUCTURAL CONDITIONS. EXPOSED CONDUITS SHALL BE INSTALLED PARALLEL TO BEAMS AND WALLS.
5. CONDUITS SHALL BE TERMINATED SO AS TO PERMIT NEAT CONNECTIONS TO MOTORS AND OTHER EQUIPMENT.
6. NO CONDUIT SMALLER THAN 3/4" PIPE SIZE NOR WIRE SMALLER THAN NO. 12 A.W.G. SHALL BE USED UNLESS OTHERWISE NOTED.
7. RECEPTACLES AND SWITCHES SHALL BE MOUNTED 45" ABOVE FINISHED FLOOR.
8. THE WIRING AND BLOCK DIAGRAMS, QUANTITY AND SIZE OF WIRES AND CONDUIT REPRESENT A SUGGESTED ARRANGEMENT BASED UPON SELECTED STANDARD COMPONENTS OF ELECTRICAL AND PROCESS EQUIPMENT. MODIFICATIONS ACCEPTABLE TO THE ENGINEER MAY BE MADE BY THE CONTRACTOR TO ACCOMMODATE EQUIPMENT ACTUALLY PURCHASED. THE BASIC SEQUENCE AND METHOD OF CONTROL MUST BE MAINTAINED AS INDICATED ON THE DRAWINGS AND/OR SPECIFICATIONS.

TEMPORARY WORK NOTES

1. WORK INDICATED AS TEMPORARY SHALL BE DONE ACCORDANCE WITH NEC ARTICLE 590, INSTALLED IN A NEAT MANNER AND WORKMAN LIKE MANNER.
2. THE USE OF PVC CONDUIT, SE CABLE, AND TRAY CABLE WHERE ALLOWED BY NEC SHALL BE ACCEPTABLE FOR TEMPORARY WORK.
3. SE CABLE AND TRAY CABLE FOR INTERIOR TEMPORARY WORK SHALL BE PROPERLY FASTENED TO BUILDING STRUCTURES AND INSTALLED IN SUCH A MANNER NOT TO INHIBIT ACCESS TO AND AROUND EQUIPMENT.
4. SE CABLE FOR EXTERIOR TEMPORARY WORK SHALL BE PROPERLY FASTENED TO BUILDING EXTERIOR SURFACES AND PROPERLY PROTECTED FROM VEHICLE DAMAGE WHERE RUN BETWEEN BUILDINGS.

ABBREVIATIONS

(2)1"C, 3#8, #10GND	2, 1–INCH CONDUITS EACH CONDUIT CONTAINING 3–#8 AWG WIRES AND 1–#10 GROUND CONDUCTOR
3/4" CE	EMPTY CONDUIT. NUMERAL DENOTES SIZE
AFF	ABOVE FINISHED FLOOR
AFG	ABOVE FINISHED GRADE
AR	ALARM RELAY
ATS	AUTOMATIC TRANSFER SWITCH
CR	CONTROL RELAY
CP	CONTROL PANEL
DRG. DWG.	DRAWING
EAN	EXCEPT AS NOTED
EC	ELECTRICAL CONTRACTOR
ETM	ELAPSED TIME METER
FE	FLOW ELEMENT
FIT	FLOW INDICATOR TRANSMITTER
FS	FLOW SWITCH
FT	FLOW TRANSMITTER
FVNR	FULL VOLTAGE NON–REVERSING
GND, GRD	GROUNDING CONDUCTOR (EQUIPMENT)
HOA	HAND–OFF–AUTOMATIC
HH	HANDHOLE
J OR JB	JUNCTION BOX
JPB	JOG PUSHBUTTON
LE	LEVEL ELEMENT
LIT	LEVEL INDICATOR TRANSMITTER
LL	LOW LEVEL
LS	LEVEL SWITCH
LT	LEVEL TRANSMITTER
MC	MOTOR CONTROLLER (STARTER)
MCC	MOTOR CONTROL CENTER
MH	MANHOLE
MFR	MANUFACTURER
MS	MOTION SENSOR
NTS	NOT TO SCALE
OEM	ORIGINAL EQUIOPMENT MANUFACTURE SUPPLIED
OH	OVERHEAD
OL	MOTOR OVERLOAD HEATER
OS	OPERATOR STATION
PB	PUSHBUTTON CONTROL STATION MOMENTARY CONTACT TYPE, STOP START
PBE	PUSHBUTTON CONTROL STATION MAINTAINED EMERGENCY STOP TYPE, TWIST TO RELEASE
PBL	PUSHBUTTON CONTROL STATION MOMENTARY TYPE WITH LOCK–OUT DEVICE, STOP–START
PBM	PUSHBUTTON CONTROL STATION MAINTAINED CONTACT TYPE, STOP START
PIT	PRESSURE INDICATOR TRANSMITTER
PL	PUSHBUTTON CONTROL STATION MOMENTARY TYPE WITH LOCK–OUT DEVICE, STOP
PS	PRESSURE SWITCH
PT	PRESSURE TRANSMITTER
RGS	RIGID GALVANIZED STEEL
RVNR	REDUCED VOLTAGE NON–REVERSING
SPD	SURGE SUPPRESSOR DEVICE
SOV	SOLENOID VALVE
S/S	SOFT STARTER
TB	TERMINAL BOX
TD	MOTOR TEMPERATURE DETECTOR
TR	TIMING RELAY
TS	TEMPERATURE SWITCH
TSP	TWISTED SHEILDED PAIR
TSTW	TWO SPEED TWO WINDING
TYP	TYPICAL
UG	UNDERGROUND
UNO	UNLESS OTHERWISE NOTED
VFD	VARIABLE FREQUENCY DRIVE
WP	WATER PROOF
WSH	HIGH TORQUE SWITCH
XFMR	TRANSFORMER

PREPARED BY

BETA
www.BETA-Inc.com

REGISTERED PROFESSIONAL

COMMONWEALTH OF MASSACHUSETTS
MICHAEL J. COTTER
ELECTRICAL
No. 40599
REGISTERED PROFESSIONAL ENGINEER

SUBCONSULTANT

SAR ENGINEERING, INC.
Mechanical/Electrical Engineers
150 Grossman Drive, Suite 309
Braintree, Massachusetts 02184
617 328-9215
web: www.sar.com

PROJECT

Taunton Wastewater Treatment Facility Improvements Phase 2

Taunton, MA

TITLE

ELECTRICAL LEGEND AND NOTES

NO.	REVISIONS	DATE

DRAWN BY:	RB
DESIGNED BY:	MC
CHECKED BY:	MC
ISSUE DATE:	03/31/22
BETA JOB NO.:	6050

SCALE

UNLESS OTHERWISE NOTED OR CHANGED BY REPRODUCTION

SHEET NO. E-0.1

3/29/2022 1:42 PM W:\YEAR - 2018\18009.00 - TAUNTON WWTF UPGRADES\ELECTRICAL DEPARTMENT\PHASE 2\18009.00 ELEC LEGEND-PHASE 2.DWG (BETA STB BW.STB)

NOTE:

1. DIESEL PUMP HEADS ARE LOCATED ON TOP DIESEL TANK, PROVIDE STANCHION MOUNTED DISCONNECT SWITCHES AND RUN CONDUIT/WIRE UP SIDE OF TANK TO EACH PUMPS.
2. PROVIDE (2) 1" UNDERGROUND CONDUIT TO GATE CONTROLLER. (1) CONDUIT TO HAVE 2#12, #12GND CONDUCTORS AND TERMINATE IN 6LP1 CIRCUIT #11. (1) CONDUIT TO HAVE 8#14 CONDUCTORS AND TERMINATE IN RTU-3 CONTROL PANEL.

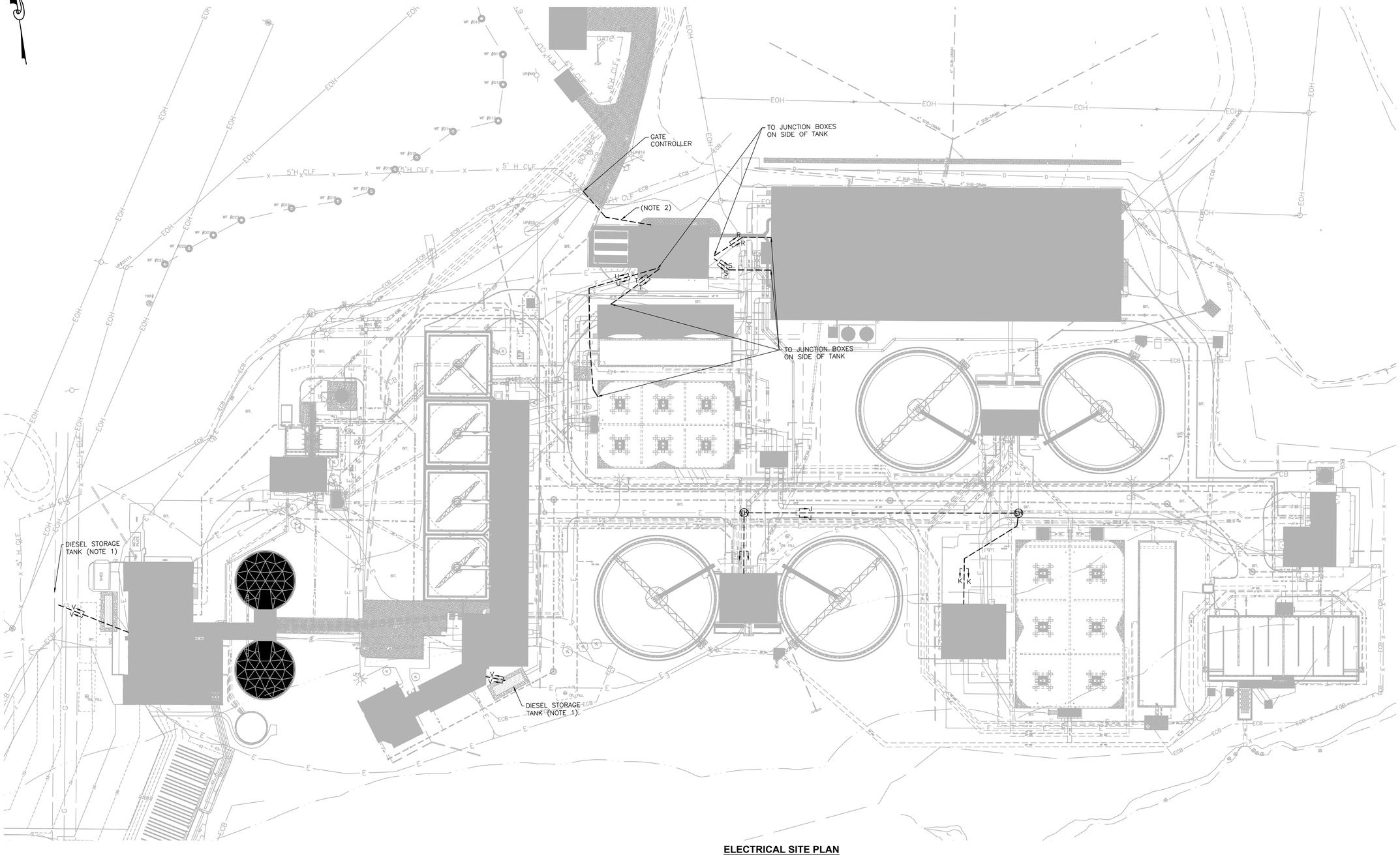

ELECTRICAL SITE PLAN
SCALE: 1" = 40'-0"

PREPARED BY

BETA
www.BETA-Inc.com

REGISTERED PROFESSIONAL

COMMONWEALTH OF MASSACHUSETTS
MICHAEL J. COTTER
ELECTRICAL
No. 40599
REGISTERED PROFESSIONAL ENGINEER

SUBCONSULTANT

SAR ENGINEERING, INC.
Mechanical/Electrical Engineers
150 Grossman Drive, Suite 309
Braintree, Massachusetts 02184
617 328-9215
web: www.sar.com

PROJECT

Taunton Wastewater Treatment Facility Improvements Phase 2

Taunton, MA

TITLE

Electrical Site Plan

NO.	REVISIONS	DATE

DRAWN BY:	RLB
DESIGNED BY:	MC
CHECKED BY:	MC
ISSUE DATE:	03/31/22
BETA JOB NO.:	6050

SCALE

40 0 40 80
SCALE IN FEET: 1"=40'

UNLESS OTHERWISE NOTED OR CHANGED BY REPRODUCTION

SHEET NO.

E-0.2

3/30/2022 7:11 AM W:\YEAR - 2018\18009.00 - TAUNTON WWTF UPGRADES\ELECTRICAL DEPARTMENT\PHASE 2\18009.00 ELEC SITE PLAN - PHASE 2.DWG (BETA STB BW.STB)

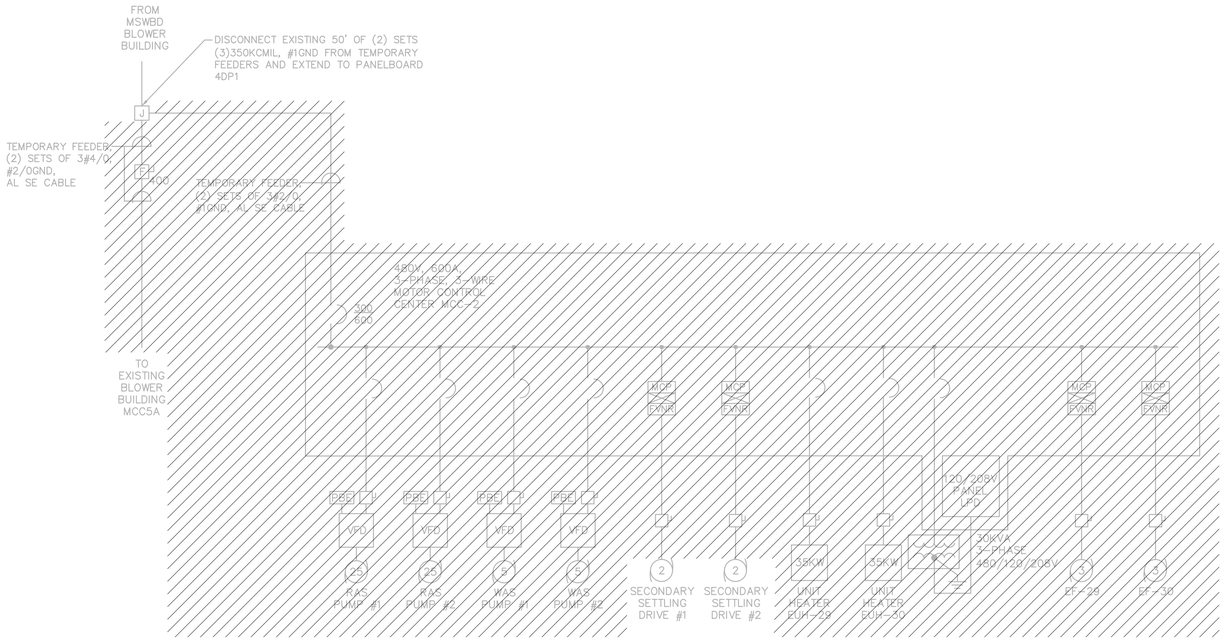

SLUDGE PUMPING STATION #1 ONE LINE DIAGRAM

NOT TO SCALE

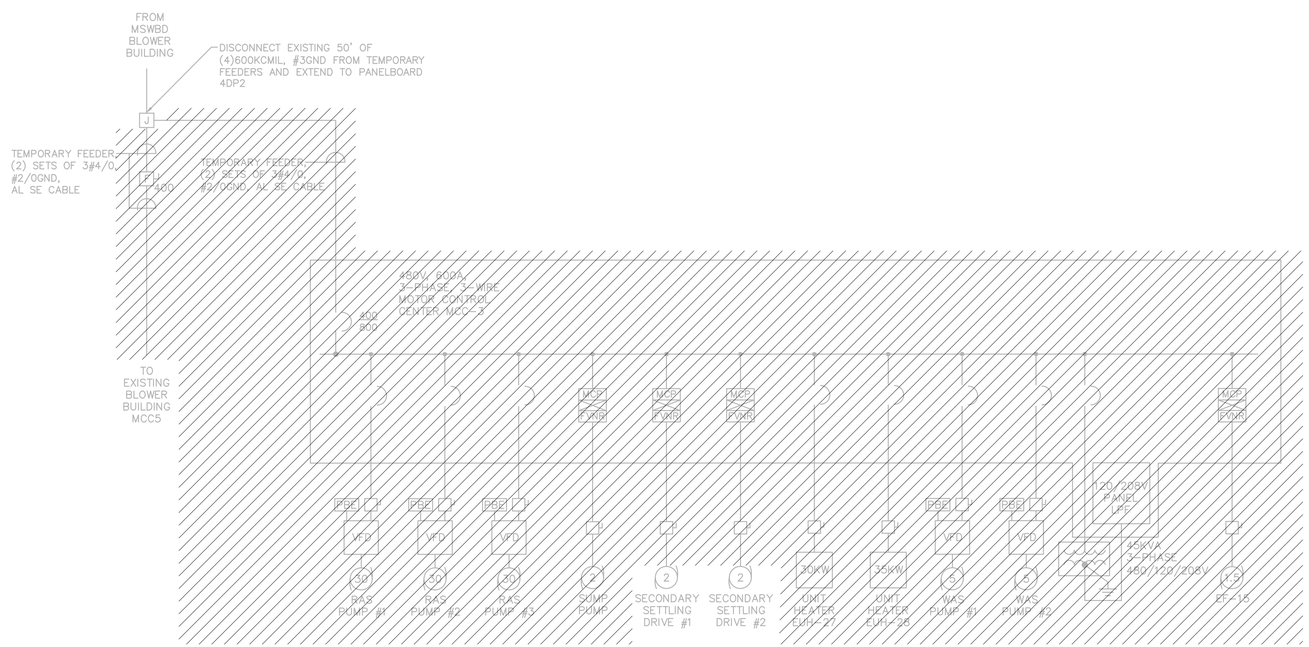

SLUDGE PUMPING STATION #2 ONE LINE DIAGRAM

NOT TO SCALE

PREPARED BY

BETA
www.BETA-Inc.com

REGISTERED PROFESSIONAL

COMMONWEALTH OF MASSACHUSETTS
MICHAEL J. COTTER
ELECTRICAL
No. 40599
REGISTERED PROFESSIONAL ENGINEER

SUBCONSULTANT

SAR ENGINEERING, INC.
Mechanical/Electrical Engineers
150 Grossman Drive, Suite 309
Braintree, Massachusetts 02184
617 328-9215
web: www.sar.com

PROJECT

Taunton Wastewater Treatment Facility Improvements Phase 2

Taunton, MA

TITLE

ELECTRICAL SLUDGE PUMPING STATIONS #1 & #2 ONE LINE DIAGRAM - DEMOLITION

NO.	REVISIONS	DATE

DRAWN BY:	RB
DESIGNED BY:	MC
CHECKED BY:	MC
ISSUE DATE:	03/31/22
BETA JOB NO.:	6050

SCALE

NONE

UNLESS OTHERWISE NOTED OR CHANGED BY REPRODUCTION

SHEET NO.

E-0.3

3/30/2022 1:25 PM W:\YEAR - 2018\18009.00 - TAUNTON WWTF UPGRADES\ELECTRICAL DEPARTMENT\PHASE 2\18009.00 ELEC ONE LINE - PHASE 2.DWG (BETA STB BW.STB)

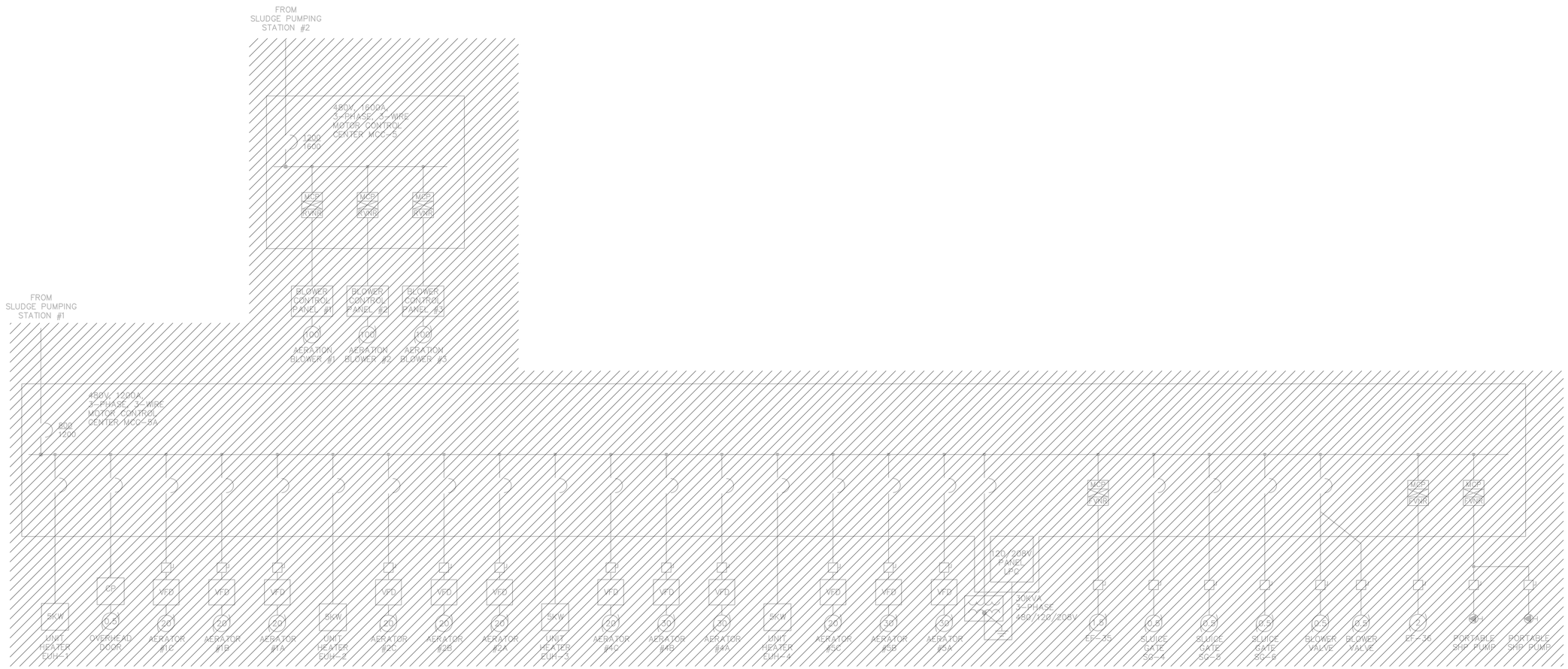

EXISTING BLOWER BUILDING ONE LINE DIGRAM

NOT TO SCALE

PREPARED BY

BETA
www.BETA-Inc.com

REGISTERED PROFESSIONAL

COMMONWEALTH OF MASSACHUSETTS
MICHAEL J. COTTER
ELECTRICAL
No. 40999
REGISTERED PROFESSIONAL ENGINEER

SUBCONSULTANT

SAR ENGINEERING, INC.
Mechanical/Electrical Engineers
150 Grossman Drive, Suite 309
Braintree, Massachusetts 02184
617 328-9215
web: www.sar.com

PROJECT

Taunton Wastewater Treatment Facility Improvements Phase 2

Taunton, MA

TITLE

ELECTRICAL
EXISTING BLOWER BUILDING
ONE LINE DIAGRAM - DEMOLITION

NO.	REVISIONS	DATE

DRAWN BY:	RB
DESIGNED BY:	MC
CHECKED BY:	MC
ISSUE DATE:	03/31/22
BETA JOB NO.:	6050

SCALE

NONE

UNLESS OTHERWISE NOTED OR CHANGED BY REPRODUCTION

SHEET NO.

E-0.4

3/29/2022 2:11 PM W:\YEAR - 2018\18009.00 - TAUNTON WWTF UPGRADES\ELECTRICAL DEPARTMENT\PHASE 2\18009.00 ELEC ONE LINE - PHASE 2.DWG (BETA STB BW.STB)

NOTES:

1. SEAL INTERIOR OF CONDUIT FROM TANK WITH ELECTRICAL PUTTY SEALANT AT CONDUIT ENTRANCE INTO DISCONNECT SWITCH

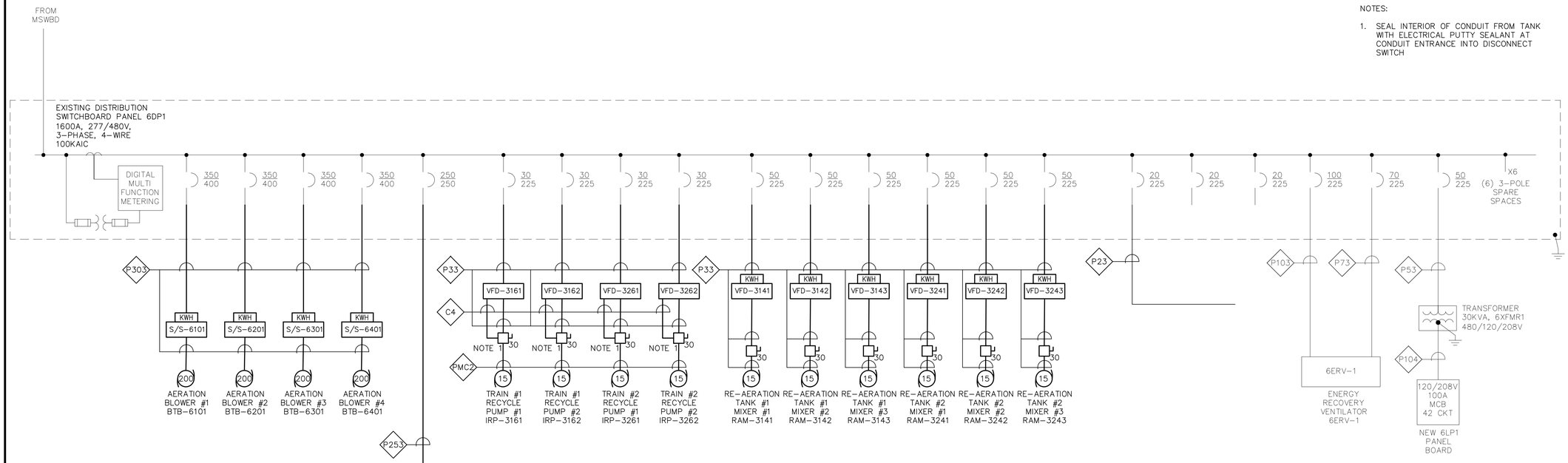

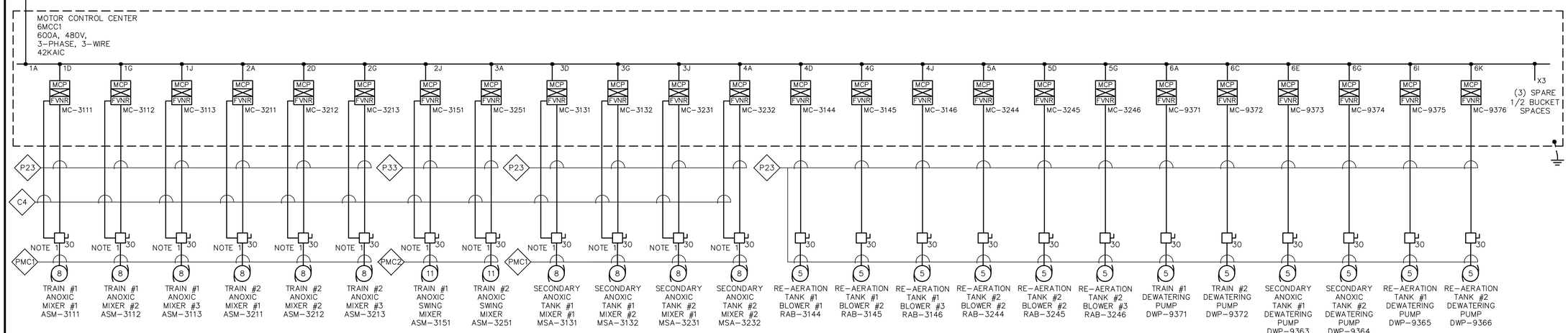

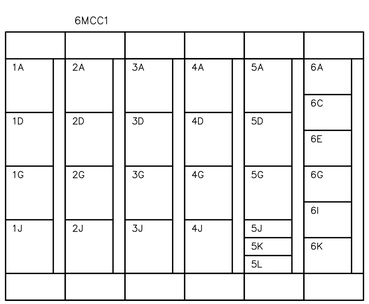

6MCC1 BUCKET LAYOUT DIAGRAM

NOT TO SCALE

NEW BLOWER BUILDING ONE LINE DIAGRAM

NOT TO SCALE

PREPARED BY

BETA
www.BETA-Inc.com

REGISTERED PROFESSIONAL

COMMONWEALTH OF MASSACHUSETTS
MICHAEL J. COTTER
ELECTRICAL
No. 40599
REGISTERED PROFESSIONAL ENGINEER

SUBCONSULTANT

SAR ENGINEERING, INC.

Mechanical/Electrical Engineers
150 Grossman Drive, Suite 309
Braintree, Massachusetts 02184
617 328-9215
web: www.sar.com

PROJECT

Taunton Wastewater Treatment Facility Improvements Phase 2

Taunton, MA

TITLE

ELECTRICAL
NEW BLOWER BUILDING
ONE LINE DIAGRAM

NO.	REVISIONS	DATE

DRAWN BY:	RB
DESIGNED BY:	MC
CHECKED BY:	MC
ISSUE DATE:	03/31/22
BETA JOB NO.:	6050

SCALE

NONE

UNLESS OTHERWISE NOTED OR CHANGED BY REPRODUCTION

SHEET NO. E-0.5

3/30/2022 3:00 PM W:\YEAR - 2018\18009.00 - TAUNTON WWTF UPGRADES\ELECTRICAL DEPARTMENT\PHASE 2\18009.00 ELEC ONE LINE - PHASE 2.DWG (BETA STB BW.STB)

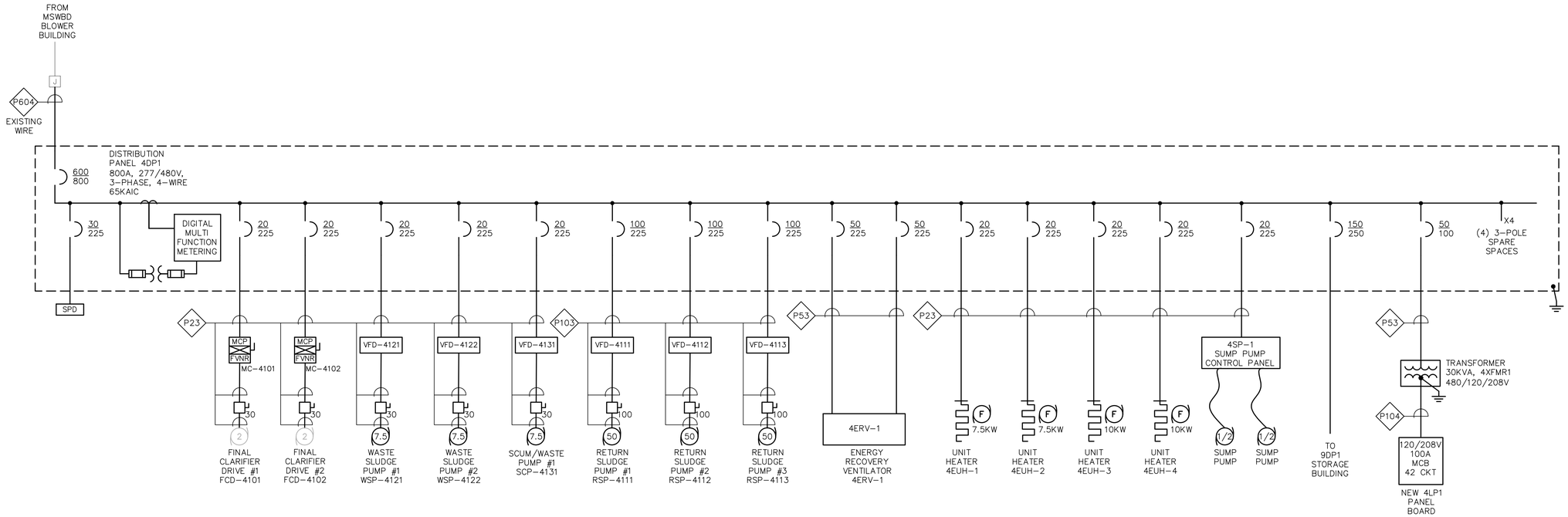

SLUDGE PUMPING STATION #1 ONE LINE DIAGRAM

NOT TO SCALE

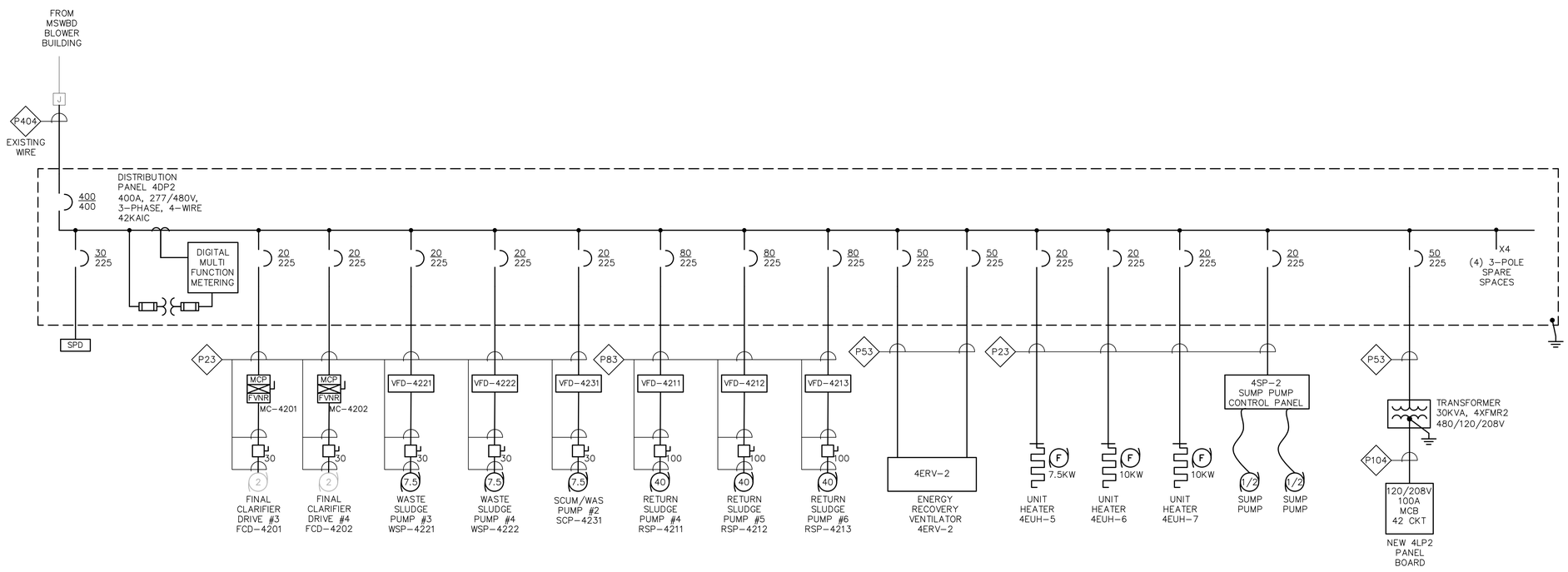

SLUDGE PUMPING STATION #2 ONE LINE DIAGRAM

NOT TO SCALE

PREPARED BY

BETA
www.BETA-Inc.com

REGISTERED PROFESSIONAL

COMMONWEALTH OF MASSACHUSETTS
MICHAEL J. COTTER
ELECTRICAL
No. 40599
REGISTERED PROFESSIONAL ENGINEER

SUBCONSULTANT

SAR ENGINEERING, INC.
Mechanical/Electrical Engineers
150 Grossman Drive, Suite 309
Braintree, Massachusetts 02184
617 328-9215
web: www.sar.com

PROJECT

Taunton Wastewater Treatment Facility Improvements Phase 2

Taunton, MA

TITLE

ELECTRICAL SLUDGE PUMPING STATIONS #1 & #2 ONE LINE DIAGRAM

NO.	REVISIONS	DATE

DRAWN BY:	RB
DESIGNED BY:	MC
CHECKED BY:	MC
ISSUE DATE:	03/31/22
BETA JOB NO.:	6050

SCALE

NONE

UNLESS OTHERWISE NOTED OR CHANGED BY REPRODUCTION

SHEET NO.

E-0.6

3/30/2022 3:00 PM W:\YEAR - 2018\18009.00 - TAUNTON WWTF UPGRADES\ELECTRICAL DEPARTMENT\PHASE 2\18009.00 ELEC ONE LINE - PHASE 2.DWG (BETA STB BW.STB)

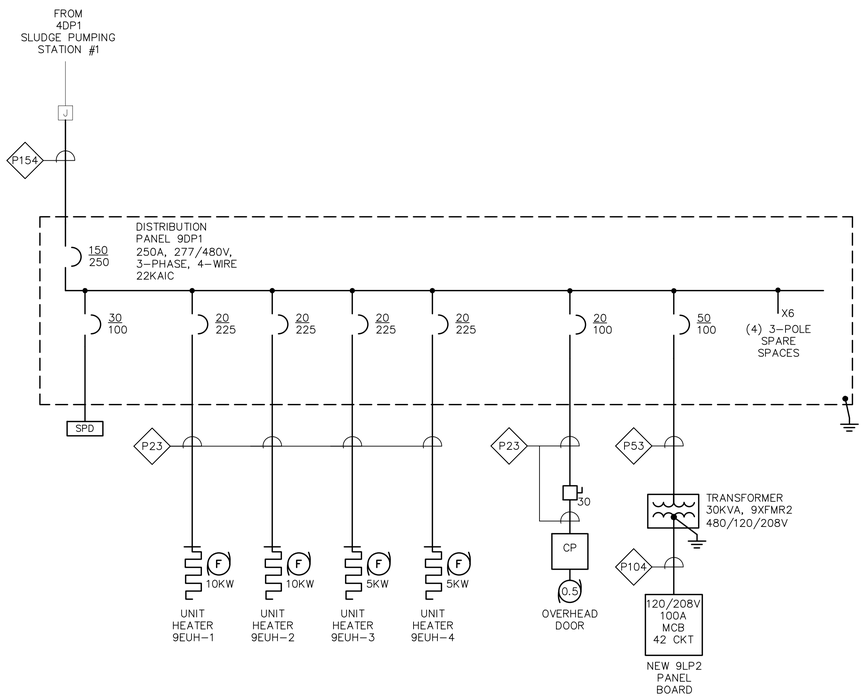

STORAGE BUILDING ONE LINE DIAGRAM

NOT TO SCALE

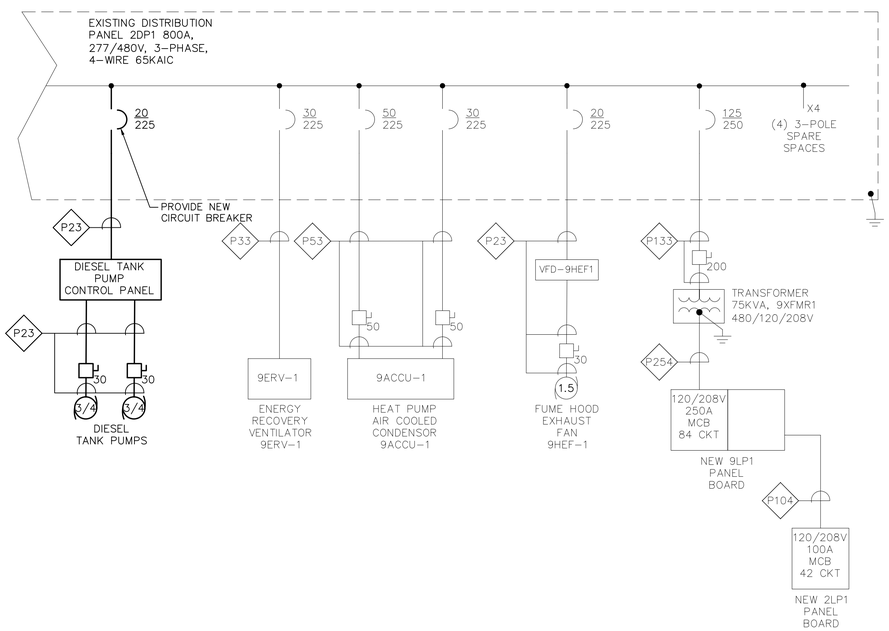

OPERATIONS BUILDING ONE LINE DIAGRAM

NOT TO SCALE

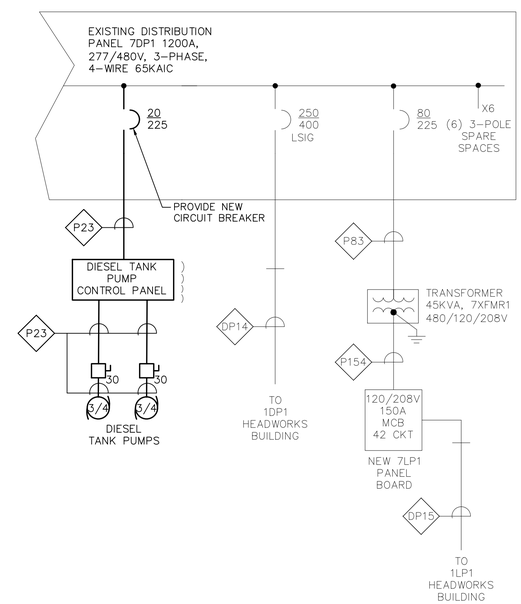

SOLIDS HANDLING BUILDING ONE LINE DIAGRAM

NOT TO SCALE

PREPARED BY

BETA
www.BETA-Inc.com

REGISTERED PROFESSIONAL

COMMONWEALTH OF MASSACHUSETTS
MICHAEL J. COTTER
ELECTRICAL
No. 40599
REGISTERED PROFESSIONAL ENGINEER

SUBCONSULTANT

SAR ENGINEERING, INC.
Mechanical/Electrical Engineers
150 Grossman Drive, Suite 309
Braintree, Massachusetts 02184
617 328-9215
web: www.sar.com

PROJECT

Taunton Wastewater Treatment Facility Improvements Phase 2

Taunton, MA

TITLE

ELECTRICAL
STORAGE BUILDING
ONE LINE DIAGRAM

NO.	REVISIONS	DATE

DRAWN BY:	RB
DESIGNED BY:	MC
CHECKED BY:	MC
ISSUE DATE:	03/31/22
BETA JOB NO.:	6050

SCALE

NONE

UNLESS OTHERWISE NOTED OR CHANGED BY REPRODUCTION

SHEET NO.

E-0.7

3/30/2022 3:03 PM W:\YEAR - 2018\18009.00 - TAUNTON WWTF UPGRADES\ELECTRICAL DEPARTMENT\PHASE 2\18009.00 ELEC ONE LINE - PHASE 2.DWG (BETA STB BW.STB)

PANELBOARD SCHEDULE

NO. 4LP1 — LOCATION: SLUDGE PUMP STATION #1

120/208 V, 3 PH, 4 W, 100 A MAINS — 100 A SOLID NEUTRAL — 100 A MCB

10,000 AIC AT 120 V — 100 A GROUND BUS — – A MLO — SURFACE MOUNTING

CIRCUIT	DESCRIPTION OF LOAD	LOAD (KVA) AØ	LOAD (KVA) BØ	LOAD (KVA) CØ	BREAKER TRIP	BREAKER POLE	BREAKER POLE	BREAKER TRIP	LOAD (KVA) AØ	LOAD (KVA) BØ	LOAD (KVA) CØ	DESCRIPTION OF LOAD	CIRCUIT
1	UPPER LEVEL & EXTERIOR LIGHTING	0.6			20	1	1	20	0.4			FLOW METERS	2
3	LOWER LEVEL LIGHTING		0.5		20	1	1	20		0.2		LEVEL TRANSMITTER	4
5	UPPER LEVEL RECETPACLES			0.8	20	1	1	20			1.0	RTU–4A SCADA CONTROL PANEL	6
7	LOWER LEVEL RECEPTACLES	0.8			20	1	1	20	0.4			CLARIFIER RECEPTACLES *	8
9	ROOF RECEPTACLE & LIGHT		0.25		20	1	1	20		0.45		CLARIFIER LIGHTS	10
11	FIRE ALARM CONTROL PANEL			0.50	20	1	1	20			–	SPARE	12
13	SPARE	–			20	1	1	20	–			SPARE	14
15	SPARE		–		20	1	1	20		–		SPARE	16
17	SPARE			–	20	1	1	20			–	SPARE	18
19	SPARE	–			20	1	1	20	–			SPARE	20
21	SPARE		–		20	1	1	20		–		SPARE	22
23	SPARE			–	20	1	1	20			–	SPARE	24
25	SPARE	–			20	1	1	20	–			SPARE	26
27	SPARE		–		20	1	1	20		–		SPARE	28
29	SPARE			–	20	1	1	20			–	SPARE	30
31	SPARE	–			20	1	1	20	–			SPARE	32
33	SPARE		–		20	1	1	20		–		SPARE	34
35	SPARE			–	20	1	1	20			–	SPARE	36
37	SPARE	–			20	1	1	20	–			SPARE	38
39	SPARE		–		20	1	1	20		–		SPARE	40
41	SPARE			–	20	1	1	20			–	SPARE	42
SUB–TOTAL CONNECTED		1.4	0.75	1.3					0.80	0.65	1.0	SUB–TOTAL CONNECTED	

*PROVIDE GFCI BREAKER

SUB–TOTAL CONNECTED KVA AØ = 2.2
SUB–TOTAL CONNECTED KVA BØ = 1.4
SUB–TOTAL CONNECTED KVA CØ = 2.3
TOTAL CONNECTED KVA = 5.9

PANELBOARD SCHEDULE

NO. 4LP2 — LOCATION: SLUDGE PUMP STATION #2

120/208 V, 3 PH, 4 W, 100 A MAINS — 100 A SOLID NEUTRAL — 100 A MCB

10,000 AIC AT 120 V — 100 A GROUND BUS — – A MLO — SURFACE MOUNTING

CIRCUIT	DESCRIPTION OF LOAD	LOAD (KVA) AØ	LOAD (KVA) BØ	LOAD (KVA) CØ	BREAKER TRIP	BREAKER POLE	BREAKER POLE	BREAKER TRIP	LOAD (KVA) AØ	LOAD (KVA) BØ	LOAD (KVA) CØ	DESCRIPTION OF LOAD	CIRCUIT
1	UPPER LEVEL & EXTERIOR LIGHTING	0.3			20	1	1	20	0.4			FLOW METERS	2
3	LOWER LEVEL LIGHTING		0.5		20	1	1	20		0.2		LEVEL TRANSMITTER	4
5	UPPER LEVEL RECETPACLES			0.6	20	1	1	20			1.0	RTU–4B SCADA CONTROL PANEL	6
7	LOWER LEVEL RECEPTACLES	0.8			20	1	1	20	0.4			CLARIFIER RECEPTACLES *	8
9	ROOF RECEPTACLE & LIGHT		0.25		20	1	1	20		0.45		CLARIFIER LIGHTS	10
11	FIRE ALARM CONTROL PANEL			0.50	20	1	1	20			–	SPARE	12
13	SPARE	–			20	1	1	20	–			SPARE	14
15	SPARE		–		20	1	1	20		–		SPARE	16
17	SPARE			–	20	1	1	20			–	SPARE	18
19	SPARE	–			20	1	1	20	–			SPARE	20
21	SPARE		–		20	1	1	20		–		SPARE	22
23	SPARE			–	20	1	1	20			–	SPARE	24
25	SPARE	–			20	1	1	20	–			SPARE	26
27	SPARE		–		20	1	1	20		–		SPARE	28
29	SPARE			–	20	1	1	20			–	SPARE	30
31	SPARE	–			20	1	1	20	–			SPARE	32
33	SPARE		–		20	1	1	20		–		SPARE	34
35	SPARE			–	20	1	1	20			–	SPARE	36
37	SPARE	–			20	1	1	20	–			SPARE	38
39	SPARE		–		20	1	1	20		–		SPARE	40
41	SPARE			–	20	1	1	20			–	SPARE	42
SUB–TOTAL CONNECTED		1.1	0.75	1.1					0.80	0.65	1.0	SUB–TOTAL CONNECTED	

*PROVIDE GFCI BREAKER

SUB–TOTAL CONNECTED KVA AØ = 1.90
SUB–TOTAL CONNECTED KVA BØ = 1.40
SUB–TOTAL CONNECTED KVA CØ = 2.10
TOTAL CONNECTED KVA = 5.40

PANELBOARD SCHEDULE

NO. 9LP2 — LOCATION: STORAGE BUILDING

120/208 V, 3 PH, 4 W, 100 A MAINS — 100 A SOLID NEUTRAL — 100 A MCB

10,000 AIC AT 120 V — 100 A GROUND BUS — – A MLO — SURFACE MOUNTING

CIRCUIT	DESCRIPTION OF LOAD	LOAD (KVA) AØ	LOAD (KVA) BØ	LOAD (KVA) CØ	BREAKER TRIP	BREAKER POLE	BREAKER POLE	BREAKER TRIP	LOAD (KVA) AØ	LOAD (KVA) BØ	LOAD (KVA) CØ	DESCRIPTION OF LOAD	CIRCUIT
1	LIGHTING	0.70			20	1	1	20	0.1			EXHAUST FAN 9EF–1	2
3	RECEPTACLES		1.08		20	1	1	20		–		SPARE	4
5	RECEPTACLES			1.08	20	1	1	20			–	SPARE	6
7	FIRE ALARM CONTROL PANEL	0.50			20	1	1	20	–			SPARE	8
9	SPARE		–		20	1	1	20		–		SPARE	10
11	SPARE			–	20	1	1	20			–	SPARE	12
13	SPARE	–			20	1	1	20	–			SPARE	14
15	SPARE		–		20	1	1	20		–		SPARE	16
17	SPARE			–	20	1	1	20			–	SPARE	18
19	SPARE	–			20	1	1	20	–			SPARE	20
21	SPARE		–		20	1	1	20		–		SPARE	22
23	SPARE			–	20	1	1	20			–	SPARE	24
25	SPARE	–			20	1	1	20	–			SPARE	26
27	SPARE		–		20	1	1	20		–		SPARE	28
29	SPARE			–	20	1	1	20			–	SPARE	30
31	SPARE	–			20	1	1	20	–			SPARE	32
33	SPARE		–		20	1	1	20		–		SPARE	34
35	SPARE			–	20	1	1	20			–	SPARE	36
37	SPARE	–			20	1	1	20	–			SPARE	38
39	SPARE		–		20	1	1	20		–		SPARE	40
41	SPARE			–	20	1	1	20			–	SPARE	42
SUB–TOTAL CONNECTED		1.2	1.08	1.08					0.1	–	–	SUB–TOTAL CONNECTED	

*PROVIDE GFCI BREAKER

SUB–TOTAL CONNECTED KVA AØ = 1.3
SUB–TOTAL CONNECTED KVA BØ = 1.08
SUB–TOTAL CONNECTED KVA CØ = 1.08
TOTAL CONNECTED KVA = 3.46

PANELBOARD SCHEDULE

NO. 6LP1 – EXISTING — LOCATION: BLOWER BUILDING

120/208 V, 3 PH, 4 W, 100 A MAINS — 100 A SOLID NEUTRAL — 100 A MCB

10,000 AIC AT 120 V — 100 A GROUND BUS — – A MLO — SURFACE MOUNTING

CIRCUIT	DESCRIPTION OF LOAD	LOAD (KVA) AØ	LOAD (KVA) BØ	LOAD (KVA) CØ	BREAKER TRIP	BREAKER POLE	BREAKER POLE	BREAKER TRIP	LOAD (KVA) AØ	LOAD (KVA) BØ	LOAD (KVA) CØ	DESCRIPTION OF LOAD	CIRCUIT
1	LIGHTING	0.70			20	1	1	20	1.0			RTU–3 SCADA CONTROL PANEL	2
3	BLOWER RM. RECEPTACLES		1.10		20	1	1	20		1.0		BIOLOGICAL TANKS ANALYZERS – TRAIN 1	4
5	ELEC RM RECEPTACLES			0.40	20	1	1	20			1.0	BIOLOGICAL TANKS ANALYZERS – TRAIN 2	6
7	FIRE ALARM CONTROL PANEL	0.50			20	1	1	20	0.8			SECONDARY ANOXIC TANK ANALYZERS	8
9	ROOFTOP LIGHTING AND RECEPTACLES		0.30		20	1	1	20		0.4		RE–AERATION TANKS ANALYZERS	10
11	ENTRANCE GATE			0.5	20	1	1	20			0.75	AIR FLOW METERS – TRAIN 1	12
13	SPARE	–			20	1	1	20	0.75			AIR FLOW METERS – TRAIN 2	14
15	BLOWER MASTER CONTROL PANEL CP–6000		0.5		20	1	1	30		2.2		AERATION VALVES – TRAIN 1	16
17	MICRO–C CONTROL PANEL CP–3600			0.25	20	1	1	30			2.2	AERATION VALVES – TRAIN 1	18
19	BIOLOGICAL TANKS LIGHTS	0.21			20	1	1	30	2.2			AERATION VALVES – TRAIN 2	20
21	RE–AERATION & SECONDARY ANOXIC TANKS LIGHTS		0.19		20	1	1	30		2.2		AERATION VALVES – TRAIN 2	22
* 23	BIOLOGICAL TANKS RECEPTACLES			1.4	20	1	1	20			0.50	MICRO–C CHEMICAL PUMPS	24 *
* 25	RE–AERATION & SECONDARY ANOXIC TANKS RECEPTACLES	1.2			20	1	1	20	0.25			MICRO–C CHEMICAL PUMP	26 *
27	AERATION BLOWER #1 CONTROL PANEL CP–6101		0.5		30#	1	1	20		0.50		LEVEL TRANSMITTERS LIT–3611 & LIT–3612	28
29	AERATION BLOWER #2 CONTROL PANEL CP–6201			0.5	30#	1	1	20			1.1	AERATION VALVE – TRAIN 1	30
31	AERATION BLOWERS #1 & #2 VALVES	2.2			30#	1	1	20	1.1			AERATION VALVE – TRAIN 2	32
33	AERATION BLOWER #3 & #4 VALVES		2.2		30#	1	1	20		–		SPARE	34
35	SPARE			–	20	1	1	20			1.5	ELECTRIC WALL HEATER 6EUH–1	36
37	SPARE	–			20	1	1	20	1.8			ELECTRIC WATER HEATER 6EWH–1	38
39	SPARE		–		20	1	1	30		0.5		AERATION BLOWER #3 CONTROL PANEL CP–6301	40
41	SPARE			–	20	1	1	30			0.5	AERATION BLOWER #4 CONTROL PANEL CP–6401	42
43	GENERATOR #1 BLOCK JACKET HEATER	2.0			30	2	1	20	1.0			GENERATOR #1 ALTERNATOR HEATER	44
45			2.0				1	20		0.5		GENERATOR #1 BATTERY CHARGER	46
47	GENERATOR #2 BLOCK JACKET HEATER			2.0	30	2	1	20			1.0	GENERATOR #2 ALTERNATOR HEATER	48
49		2.0					1	20	0.5			GENERATOR #2 BATTERY CHARGER	50
51	GENERATOR #3 BLOCK JACKET HEATER		2.0		30	2	1	20		1.0		GENERATOR #3 ALTERNATOR HEATER	52
53				2.0			1	20			0.5	GENERATOR #3 BATTERY CHARGER	54
SUB–TOTAL CONNECTED		8.81	8.79	7.05					9.40	8.30	9.05	SUB–TOTAL CONNECTED	

*PROVIDE GFCI BREAKER

#REPLACE EXISTING CIRCUIT BREAKER

SUB–TOTAL CONNECTED KVA AØ = 18.21
SUB–TOTAL CONNECTED KVA BØ = 17.09
SUB–TOTAL CONNECTED KVA CØ = 16.10
TOTAL CONNECTED KVA = 51.40

PREPARED BY

BETA
www.BETA-Inc.com

REGISTERED PROFESSIONAL

COMMONWEALTH OF MASSACHUSETTS — MICHAEL J. COTTER — ELECTRICAL — No. 40599 — REGISTERED PROFESSIONAL ENGINEER

SUBCONSULTANT

SAR ENGINEERING, INC.
Mechanical/Electrical Engineers
150 Grossman Drive, Suite 309
Braintree, Massachusetts 02184
617 328-9215
web: www.sar.com

PROJECT

Taunton Wastewater Treatment Facility Improvements Phase 2

Taunton, MA

TITLE

ELECTRICAL PANELBOARD SCHEDULES

NO.	REVISIONS	DATE

DRAWN BY: RB
DESIGNED BY: MC
CHECKED BY: MC
ISSUE DATE: 03/31/22
BETA JOB NO.: 6050

SCALE: NONE

UNLESS OTHERWISE NOTED OR CHANGED BY REPRODUCTION

SHEET NO. E-0.08

3/30/2022 7:23 AM W:\YEAR - 2018\18009.00 - TAUNTON WWTF UPGRADES\ELECTRICAL DEPARTMENT\PHASE 2\18009.00 ELEC DIAGRAMS AND DETAILS - PHASE 2.DWG (BETA STB.BW.STB)

POWER CABLE/CONDUIT SCHEDULE

SYMBOL	CONDUIT SIZE	CONDUCTORS	GND*
P22	3/4"	(2)#12	(1)#12
P23	3/4"	(3)#12	(1)#12
P26	3/4"	(6)#12	(1)#12
P32	3/4"	(2)#10	(1)#10
P33	3/4"	(3)#10	(1)#10
P53	3/4"	(3)#8	(1)#10
P54	3/4"	(4)#8	(1)#10
P63	1"	(3)#6	(1)#8
P64	1"	(4)#6	(1)#8
P83	1 1/4"	(3)#4	(1)#8
P84	1 1/4"	(4)#4	(1)#8
P103	1 1/2"	(3)#3	(1)#6
P104	1 1/2"	(4)#3	(1)#6
P113	1 1/2"	(3)#2	(1)#6
P114	1 1/2"	(4)#2	(1)#6
P133	2"	(3)#1	(1)#6
P134	2"	(4)#1	(1)#6
P153	2"	(3)#1/0	(1)#6
P154	2"	(4)#1/0	(1)#6
P173	2 1/2"	(3)#2/0	(1)#6
P174	2 1/2"	(4)#2/0	(1)#6
P203	2 1/2"	(3)#3/0	(1)#4
P204	2 1/2"	(4)#3/0	(1)#4
P233	3"	(3)#4/0	(1)#4
P234	3"	(4)#4/0	(1)#4
P253	3"	(3)250KCMIL	(1)#4
P254	3"	(4)250KCMIL	(1)#4
P303	3"	(3)350KCMIL	(1)#4
P304	3"	(4)350KCMIL	(1)#4
P403	4"	(3)500KCMIL	(1)#3
P404	4"	(4)500KCMIL	(1)#3
P804	(2)4"	(8)500KCMIL	(2)#1/0
PMC1	1 1/2" THRU TANK SLAB	MANUFACIURE SUPPLIED MOTOR CABLE	
PMC2	2" THRU TANK SLAB	MANUFACTURE SUPPLIED MOTOR CABLE	

SIGNAL CABLE/CONDUIT SCHEDULE

SYMBOL	CONDUIT SIZE	CONDUCTORS
S	1"	VENDER PROVIDED
S1	3/4"	1-2/C#16 TSP
S13	3/4"	1-3/C#16 TSP
S2	3/4"	2-2/C#16 TSP
S23	3/4"	2-3/C#16 TSP
S3	1"	3-2/C#16 TSP
S33	1"	3-3/C#16 TSP
S4	1"	4-2/C#16 TSP
S5	1"	5-2/C#16 TSP
S6	1 1/2"	6-2/C#16 TSP
S7	1 1/2"	7-2/C#16 TSP
S8	1 1/2"	8-2/C#16 TSP
S9	1 1/2"	9-2/C#16 TSP
S10	2"	10-2/C#16 TSP
TC1	3/4"	8/C#18

TELE/DATA CABLE/CONDUIT SCHEDULE

SYMBOL	CONDUIT SIZE	CABLES
TD1	1"	1-CAT6
TD2	1"	2-CAT6
FO6	1"	6 STRAND FIBER OPTIC
FO12	2"	12 STRAND FIBER OPTIC

CONTROL CABLE/CONDUIT SCHEDULE

SYMBOL	CONDUIT SIZE	CONDUCTORS
C2	3/4"	2#14
C4	3/4"	4#14
C5	3/4"	5#14
C6	3/4"	6#14
C7	3/4"	7#14
C8	3/4"	8#14
C9	3/4"	9#14
C10	3/4"	10#14
C12	3/4"	12#14
C16	1"	16#14
C20	1"	20#14
C30	1"	30#14
C50	1 1/2"	50#14

NOTE: CONDUIT AND CONDUCTOR SIZES ARE TO BE PER THE ABOVE SCHEDULES UNLESS OTHERWISE NOTED.

LIGHTING FIXTURE SCHEDULE

TYPE	DESCRIPTION	MANUFACTURER & CATALOG SERIES	LAMPS		VOLTS	WATTS	MOUNTING		REMARKS
			TYPE	LUMENS			TYPE	HEIGHT	
F1	96" LED ENCLOSED AND GASKETED INDUSTRIAL LIGHTING FIXTURE.	LITHONIA FEM-L96-9000LM-IMAFL-MVOLT-35K-80CRI	LED 3500K	8124lm	120	54	PENDANT	13'-5"ABOVE FINISHED FLOOR UNLESS OTHERWISE NOTED	
F2	48" LED ENCLOSED AND GASKETED INDUSTRIAL LIGHTING FIXTURE.	LITHONIA FEM-L48-4000LM-IMAFL-MVOLT-35K-80CRI	LED 3500K	3615lm	120	24	PENDANT	13'-5"ABOVE FINISHED FLOOR UNLESS OTHERWISE NOTED	
F3	48" LED ENCLOSED AND GASKETED INDUSTRIAL LIGHTING FIXTURE.	LITHONIA FEM-L48-4000LM-IMAFL-MVOLT-35K-80CRI	LED 3500K	3615lm	120	24	SURFACE		
F7	LED FLOOD LIGHT KNUCKLE MOUNT WITH 1/2" THREADED PIPE	LITHONIA OFL1-LED-P1-40K-MVOLT-THK-M	LED 4000K	2295lm	120	21	PIPE		
	SELF CONTAINED EMERGENCY LIGHTING BATTERY UNIT NEMA 4 WITH TWO LIGHTING HEADS	REFER TO SPECIFICATIONS	LED	–	120	8	WALL		INSTALL 3/4"C, 2#12, 1#12GND TO REMOTE HEADS
	SEALED-BEAM WEATHERPROOF REMOTE LIGHTING FIXTURE WITH TWO LIGHTING HEADS	REFER TO SPECIFICATIONS	LED	–	120	8	WALL		
	EMERGENCY EXIT SIGN LED TYPE WITH BATTERY BACK-UP NEMA 4X	REFER TO SPECIFICATIONS	LED	–	120	3	WALL		

LIGHTING FIXTURE SCHEDULES NOTES:

1. THE CATALOG NUMBERS LISTED ARE GIVEN AS A GUIDE TO THE DESIGN AND QUALITY OF FIXTURE DESIRED. EQUIVALENT DESIGNS, MATERIALS, DIMENSIONS, COEFFICIENT OF UTILIZATIONS AND EQUAL QUALITY FIXTURES OF OTHER MANUFACTURERS WILL BE ACCEPTABLE.

PREPARED BY

BETA
www.BETA-Inc.com

REGISTERED PROFESSIONAL

COMMONWEALTH OF MASSACHUSETTS
MICHAEL J. COTTER
ELECTRICAL
No. 40999
REGISTERED PROFESSIONAL ENGINEER

SUBCONSULTANT

SAR ENGINEERING, INC.
Mechanical/Electrical Engineers
150 Grossman Drive, Suite 309
Braintree, Massachusetts 02184
617 328-9215
web: www.sar.com

PROJECT

Taunton Wastewater Treatment Facility Improvements Phase 2

Taunton, MA

TITLE

ELECTRICAL LIGHTING & CABLE/CONDUIT SCHEDULES

NO.	REVISIONS	DATE

DRAWN BY:	RB
DESIGNED BY:	MC
CHECKED BY:	MC
ISSUE DATE:	03/31/22
BETA JOB NO.:	6050

SCALE

NONE

UNLESS OTHERWISE NOTED OR CHANGED BY REPRODUCTION

SHEET NO. E-0.09

3/29/2022 1:58 PM W:\YEAR - 2018\18009.00 - TAUNTON WWTF UPGRADES\ELECTRICAL DEPARTMENT\PHASE 2\18009.00 ELEC DIAGRAMS AND DETAILS - PHASE 2.DWG (BETA STB BW STB)

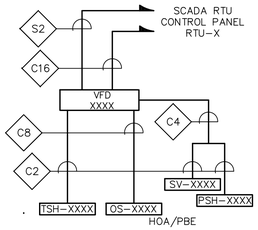

CONTROL BLOCK WIRING DIAGRAM
RETURN, WASTE, AND SCUM/WASTE SLUDGE PUMPS

NOT TO SCALE

TYPICAL FOR:

- VFD-4111/OS-4111/TSH-4111/PSH-4111/SV-4111 – RTU-4A
- VFD-4112/OS-4112/TSH-4112/PSH-4112/SV-4112 – RTU-4A
- VFD-4113/OS-4113/TSH-4113/PSH-4113/SV-4113 – RTU-4A
- VFD-4121/OS-4121/TSH-4121/PSH-4121/SV-4121 – RTU-4A
- VFD-4122/OS-4122/TSH-4122/PSH-4122/SV-4122 – RTU-4A
- VFD-4131/OS-4131/TSH-4131/PSH-4131/SV-4131 – RTU-4A
- VFD-4211/OS-4211/TSH-4211/PSH-4211/SV-4211 – RTU-4B
- VFD-4212/OS-4212/TSH-4212/PSH-4212/SV-4212 – RTU-4B
- VFD-4213/OS-4213/TSH-4213/PSH-4213/SV-4213 – RTU-4B
- VFD-4221/OS-4221/TSH-4221/PSH-4221/SV-4221 – RTU-4B
- VFD-4222/OS-4222/TSH-4222/PSH-4222/SV-4222 – RTU-4B
- VFD-4231/OS-4231/TSH-4231/PSH-4231/SV-4231 – RTU-4B

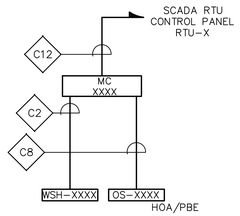

CONTROL BLOCK WIRING DIAGRAM
CLARIFIER DRIVES

NOT TO SCALE

TYPICAL FOR:

- MC-4101/OS-4101/WSH-4101 – RTU-4A
- MC-4102/OS-4102/WSH-4102 – RTU-4A
- MC-4201/OS-4201/WSH-4201 – RTU-4B
- MC-4202/OS-4202/WSH-4202 – RTU-4B

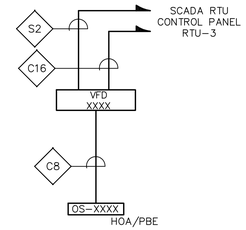

CONTROL BLOCK WIRING DIAGRAM
RECYCLE PUMPS

NOT TO SCALE

TYPICAL FOR:

- VFD-3161/OS-3161
- VFD-3162/OS-3162
- VFD-3261/OS-3261
- VFD-3262/OS-3262

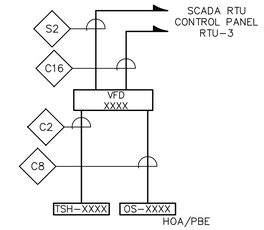

CONTROL BLOCK WIRING DIAGRAM
RE-AERATION MIXERS

NOT TO SCALE

TYPICAL FOR:

- VFD-3141/OS-3141/TSH-3141
- VFD-3142/OS-3142/TSH-3142
- VFD-3143/OS-3143/TSH-3143
- VFD-3241/OS-3241/TSH-3241
- VFD-3242/OS-3242/TSH-3242
- VFD-3243/OS-3243/TSH-3243

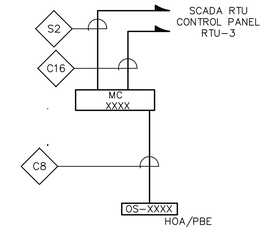

CONTROL BLOCK WIRING DIAGRAM
RE-AERATION BLOWERS

NOT TO SCALE

TYPICAL FOR:

- MC-3144/OS-3144/TSH-3144
- MC-3145/OS-3145/TSH-3145
- MC-3146/OS-3146/TSH-3146
- MC-3244/OS-3244/TSH-3244
- MC-3245/OS-3245/TSH-3245
- MC-3246/OS-3246/TSH-3246

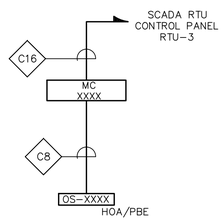

CONTROL BLOCK WIRING DIAGRAM
ANOXIC MIXERS

NOT TO SCALE

TYPICAL FOR:

- MC-3111/OS-3111
- MC-3112/OS-3112
- MC-3113/OS-3113
- MC-3131/OS-3131
- MC-3132/OS-3132
- MC-3151/OS-3151
- MC-3211/OS-3211
- MC-3212/OS-3212
- MC-3213/OS-3213
- MC-3231/OS-3231
- MC-3232/OS-3232
- MC-3251/OS-3251

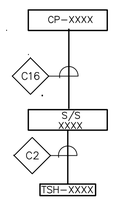

CONTROL BLOCK WIRING DIAGRAM
AERATION BLOWERS

NOT TO SCALE

TYPICAL FOR:

- S/S-6101/CP-6101/TSH-6101
- S/S-6201/CP-6201/TSH-6201
- S/S-6301/CP-6301/TSH-6301
- S/S-6401/CP-6401/TSH-6401

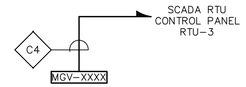

CONTROL BLOCK WIRING DIAGRAM
SLIDE GATES

NOT TO SCALE

TYPICAL FOR:

- SG-3411
- SG-3422
- SG-3431
- SG-3432
- SG-3441
- SG-3442
- SG-3443
- SG-3444

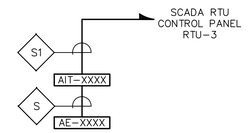

CONTROL BLOCK WIRING DIAGRAM
SINGLE ANALYZERS

NOT TO SCALE

TYPICAL FOR:

- AE-3503/AIT-3503
- AE-3504/AIT-3504
- AE-3510/AIT-3510
- AE-3513/AIT-3513
- AE-3523/AIT-3523
- AE-3524/AIT-3524
- AE-3530/AIT-3530
- AE-3533/AIT-3533

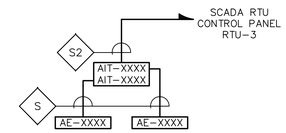

CONTROL BLOCK WIRING DIAGRAM
DUAL ANALYZERS

NOT TO SCALE

TYPICAL FOR:

- AE-3501/AIT-3501, AE-3502/AIT-3502
- AE-3505/AIT-3505, AE-3506/AIT-3506
- AE-3507/AIT-3507, AE-3508/AIT-3508
- AE-3511/AIT-3511, AE-3512/AIT-3512
- AE-3521/AIT-3521, AE-3522/AIT-3522
- AE-3525/AIT-3525, AE-3526/AIT-3526
- AE-3527/AIT-3527, AE-3528/AIT-3528
- AE-3531/AIT-3531, AE-3532/AIT-3532

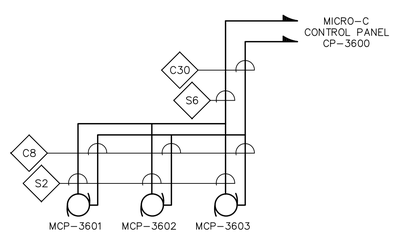

CONTROL BLOCK WIRING DIAGRAM
MICRO-C FEED PUMPS

NOT TO SCALE

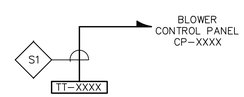

CONTROL BLOCK WIRING DIAGRAM
BLOWER TEMPERATURE TRANSMITTERS

NOT TO SCALE

TYPICAL FOR:

- TT-6103/CP-6101
- TT-6203/CP-6201
- TT-6303/CP-6301
- TT-6403/CP-6401

CONTROL BLOCK WIRING DIAGRAM
DUAL ANALYZERS

NOT TO SCALE

TYPICAL FOR:

- AE-3501/AIT-3501, AE-3502/AIT-3502
- AE-3505/AIT-3505, AE-3506/AIT-3506
- AE-3507/AIT-3507, AE-3508/AIT-3508
- AE-3511/AIT-3511, AE-3512/AIT-3512
- AE-3521/AIT-3521, AE-3522/AIT-3522
- AE-3525/AIT-3525, AE-3526/AIT-3526
- AE-3527/AIT-3527, AE-3528/AIT-3528
- AE-3531/AIT-3531, AE-3532/AIT-3532

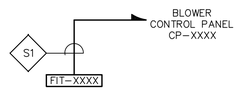

CONTROL BLOCK WIRING DIAGRAM
AERATION THERMAL MASS FLOW METERS

NOT TO SCALE

TYPICAL FOR:

- FIT-3171/CP-6000
- FIT-3172/CP-6000
- FIT-3173/CP-6000
- FIT-3174/CP-6000
- FIT-3175/CP-6000
- FIT-3271/CP-6000
- FIT-3272/CP-6000
- FIT-3273/CP-6000
- FIT-3274/CP-6000
- FIT-3275/CP-6000

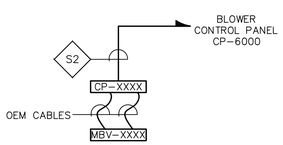

CONTROL BLOCK WIRING DIAGRAM
AERATION VALVES

NOT TO SCALE

TYPICAL FOR:

- MBV-3171/CP-3171
- MBV-3172/CP-3172
- MBV-3173/CP-3173
- MBV-3174/CP-3174
- MBV-3175/CP-3175
- MBV-3271/CP-3271
- MBV-3272/CP-3272
- MBV-3273/CP-3273
- MBV-3274/CP-3274
- MBV-3275/CP-3275

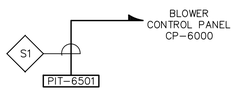

CONTROL BLOCK WIRING DIAGRAM
PRESSURE TRANSMITTERS

NOT TO SCALE

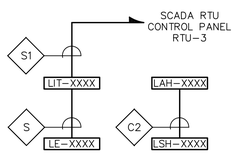

CONTROL BLOCK WIRING DIAGRAM
MICRO-C TANKS LEVEL MONITORING

NOT TO SCALE

TYPICAL FOR:

- LE-3611/LIT-3611/LSH-3611/LAH-3611
- LE-3612/LIT-3612/LSH-3612/LAH-3612

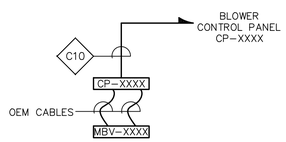

CONTROL BLOCK WIRING DIAGRAM
AERATION BLOWERS MOTORIZED VALVES

NOT TO SCALE

TYPICAL FOR:

- MBV-6102/CP-6101
- MBV-6202/CP-6201
- MBV-6302/CP-6301
- MBV-6402/CP-6401

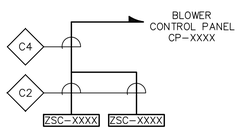

CONTROL BLOCK WIRING DIAGRAM
AERATION BLOWER MANUAL VALVES

NOT TO SCALE

TYPICAL FOR:

- ZSO-6104/ZSC-6104/CP-6101
- ZSO-6204/ZSC-6204/CP-6201
- ZSO-6304/ZSC-6204/CP-6301
- ZSO-6404/ZSC-6204/CP-6401

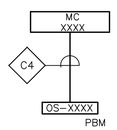

CONTROL BLOCK WIRING DIAGRAM
DEWATERING PUMPS

NOT TO SCALE

TYPICAL FOR:

- MC-9371/OS-9371
- MC-9372/OS-9372
- MC-9373/OS-9373
- MC-9374/OS-9374
- MC-9375/OS-9375
- MC-9376/OS-9376

PREPARED BY

BETA
www.BETA-Inc.com

REGISTERED PROFESSIONAL

COMMONWEALTH OF MASSACHUSETTS
MICHAEL J. COTTER
ELECTRICAL
No. 40599
REGISTERED PROFESSIONAL ENGINEER

SUBCONSULTANT

SAR ENGINEERING, INC.
Mechanical/Electrical Engineers
150 Grossman Drive, Suite 309
Braintree, Massachusetts 02184
617 328-9215
web: www.sar.com

PROJECT

Taunton Wastewater Treatment Facility Improvements Phase 2

Taunton, MA

TITLE

ELECTRICAL CONTROL BLOCK WIRING DIAGRAMS

NO.	REVISIONS	DATE

DRAWN BY:	RB
DESIGNED BY:	MC
CHECKED BY:	MC
ISSUE DATE:	03/31/22
BETA JOB NO.:	6050

SCALE

NONE

UNLESS OTHERWISE NOTED OR CHANGED BY REPRODUCTION

SHEET NO.

E-0.10

3/29/2022 1:59 PM W:\YEAR - 2018\18009.00 - TAUNTON WWTF UPGRADES\ELECTRICAL DEPARTMENT\PHASE 2\18009.00 ELEC DIAGRAMS AND DETAILS - PHASE 2.DWG (BETA STB BW STB)

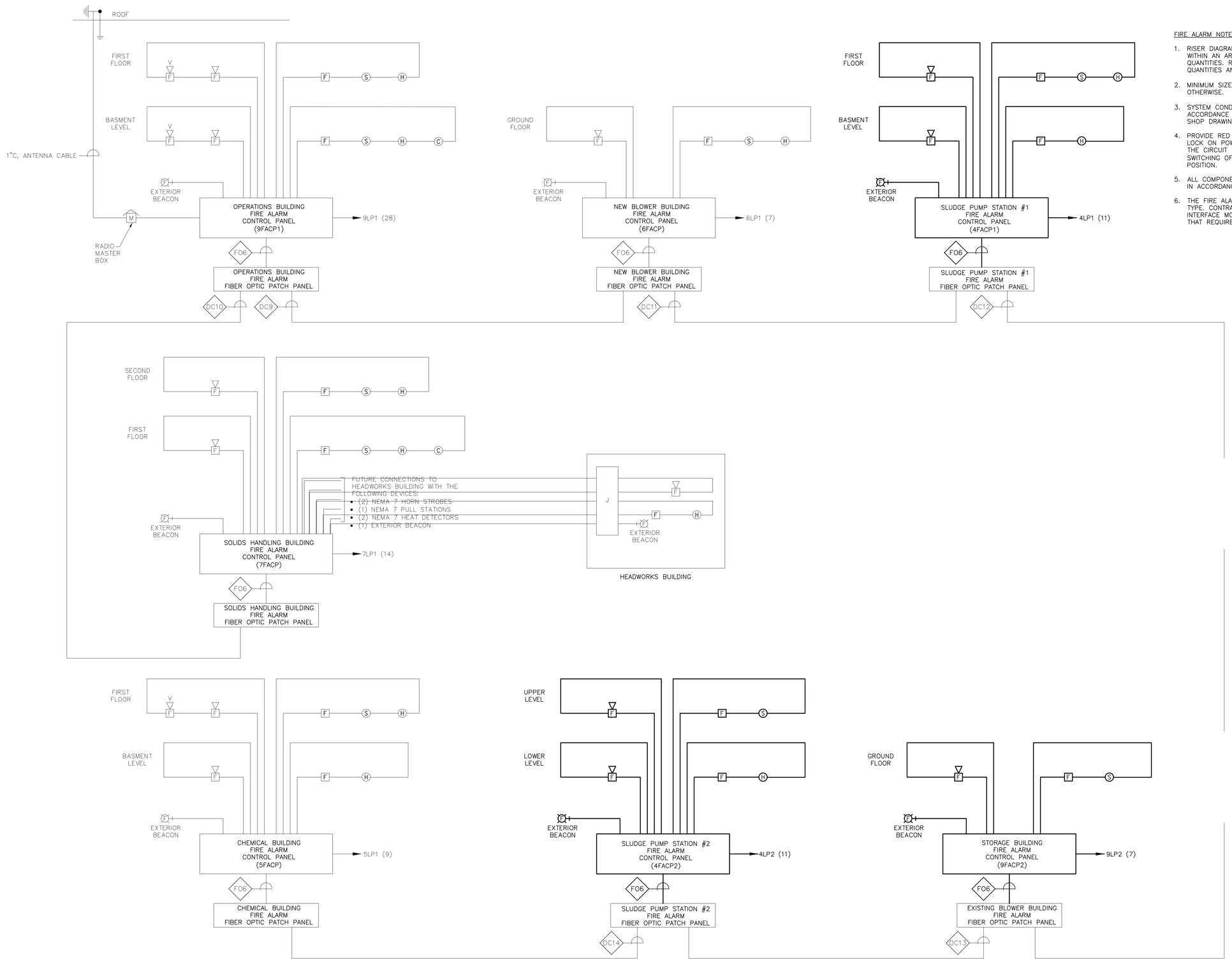

FIRE ALARM NOTES:

1. RISER DIAGRAM ONLY REPRESENTS TYPE OF DEVICES WITHIN AN AREA AND DOES NOT REPRESENT ACTUAL QUANTITIES. REFER TO PLAN DRAWINGS FOR EXACT QUANTITIES AND LOCATIONS OF DEVICES.
2. MINIMUM SIZE CONDUIT SHALL BE 3/4" UNLESS NOTED OTHERWISE.
3. SYSTEM CONDUIT/CABLING SHALL BE INSTALLED IN ACCORDANCE WITH EQUIPMENT SUPPLIERS APPROVED SHOP DRAWINGS AND WIRING DIAGRAMS.
4. PROVIDE RED COLORED CIRCUIT BREAKER HANDLE LOCK ON POWER CIRCUIT. HANDLE LOCK SHALL ALLOW THE CIRCUIT BREAKER TO TRIP, BUT PREVENT SWITCHING OF THE CIRCUIT BREAKER TO THE "OFF" POSITION.
5. ALL COMPONENTS OF THE SYSTEM SHALL BE MOUNTED IN ACCORDANCE WITH ADA REQUIREMENTS.
6. THE FIRE ALARM SYSTEM SHALL BE ADDRESSABLE TYPE. CONTRACTOR TO PROVIDE THE NECESSARY INTERFACE MODULES FOR THE FIRE ALARM DEVICES THAT REQUIRES THEM.

FIRE ALARM RISERS & PANEL INTERCONNECTION DIAGRAM

NOT TO SCALE

PREPARED BY

BETA
www.BETA-Inc.com

REGISTERED PROFESSIONAL

COMMONWEALTH OF MASSACHUSETTS
MICHAEL J. COTTER
ELECTRICAL
No. 40599
REGISTERED PROFESSIONAL ENGINEER

SUBCONSULTANT

SAR ENGINEERING, INC.
Mechanical/Electrical Engineers
150 Grossman Drive, Suite 309
Braintree, Massachusetts 02184
617 328-9215
web: www.sar.com

PROJECT

Taunton Wastewater Treatment Facility Improvements Phase 2

Taunton, MA

TITLE

ELECTRICAL SCADA PANEL INTERCONNECTION DIAGRAM

NO.	REVISIONS	DATE

DRAWN BY:	RB
DESIGNED BY:	MC
CHECKED BY:	MC
ISSUE DATE:	03/31/22
BETA JOB NO.:	6050

SCALE

NONE

UNLESS OTHERWISE NOTED OR CHANGED BY REPRODUCTION

SHEET NO. E-0.11

3/29/2022 1:59 PM W:\YEAR - 2018\18009.00 - TAUNTON WWTF UPGRADES\ELECTRICAL DEPARTMENT\PHASE 2\18009.00 ELEC DIAGRAMS AND DETAILS - PHASE 2.DWG (BETA STB BW.STB)

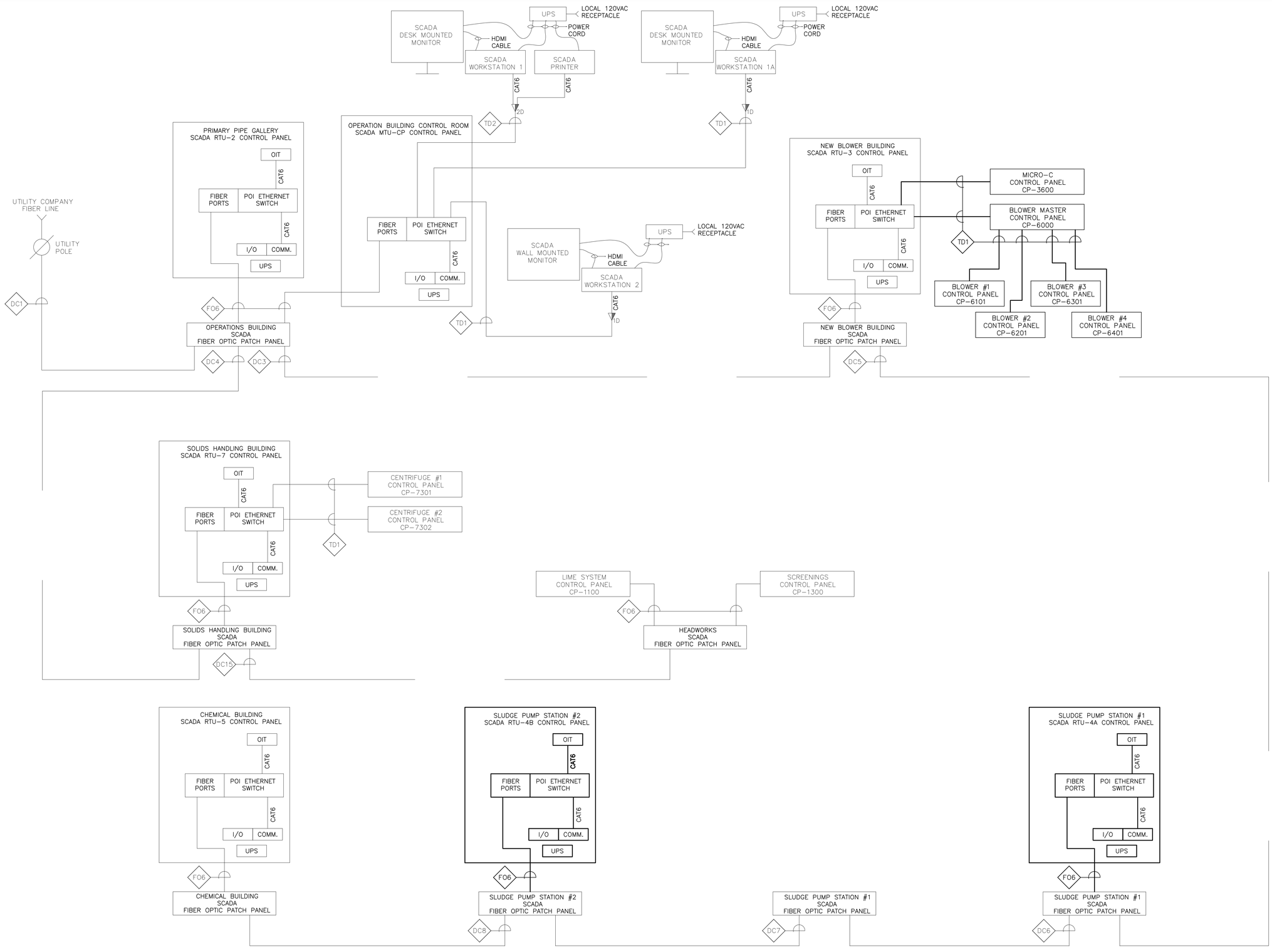

SCADA SYSTEM INTERCONNECTION DIAGRAM

NOT TO SCALE

PREPARED BY

BETA
www.BETA-Inc.com

REGISTERED PROFESSIONAL

COMMONWEALTH OF MASSACHUSETTS
MICHAEL J. COTTER
ELECTRICAL
No. 40599
REGISTERED PROFESSIONAL ENGINEER

SUBCONSULTANT

SAR ENGINEERING, INC.
Mechanical/Electrical Engineers
150 Grossman Drive, Suite 309
Braintree, Massachusetts 02184
617 328-9215
web: www.sar.com

PROJECT

Taunton Wastewater Treatment Facility Improvements Phase 2

Taunton, MA

TITLE

ELECTRICAL SCADA PANEL INTERCONNECTION DIAGRAM

NO.	REVISIONS	DATE

DRAWN BY:	RB
DESIGNED BY:	MC
CHECKED BY:	MC
ISSUE DATE:	03/31/22
BETA JOB NO.:	6050

SCALE

NONE

UNLESS OTHERWISE NOTED OR CHANGED BY REPRODUCTION

SHEET NO.

E-0.12

3/30/2022 3:09 PM W:\YEAR - 2018\18009.00 - TAUNTON WWTF UPGRADES\ELECTRICAL DEPARTMENT\PHASE 2\18009.00 ELEC DIAGRAMS AND DETAILS - PHASE 2.DWG (BETA STB BW.STB)

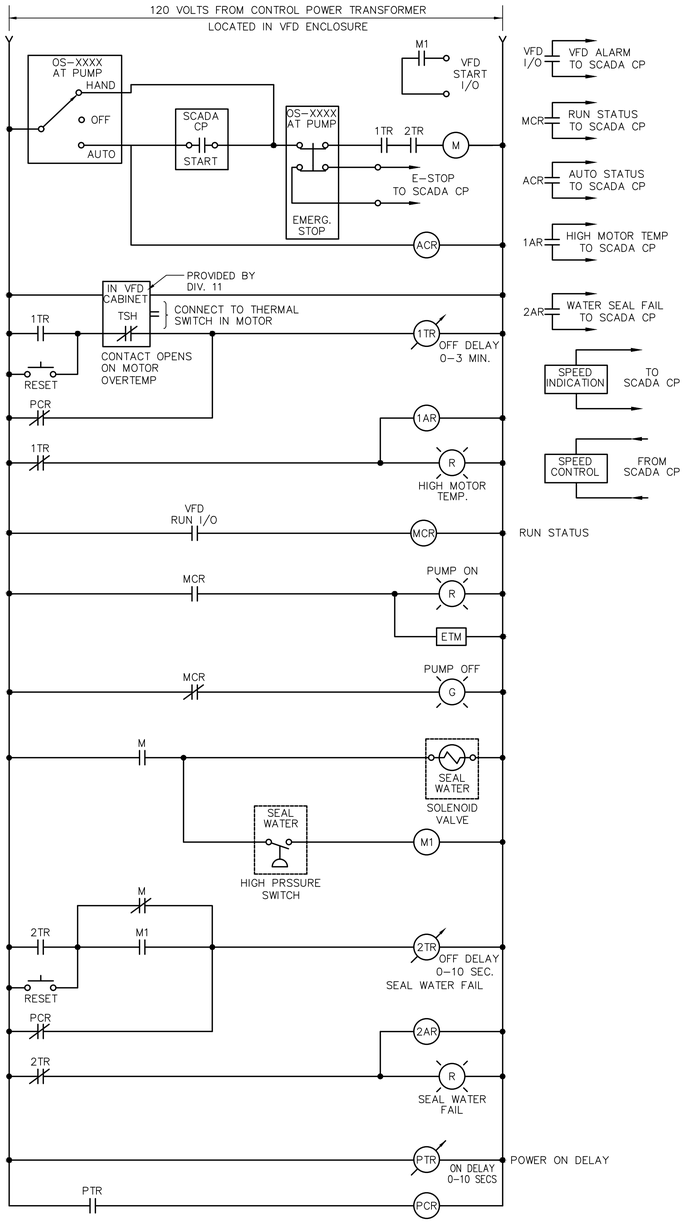

MOTOR CONTROL WIRING DIAGRAM
RETURN, WASTE, AND SCUM/WASTE SLUDGE PUMPS
NOT TO SCALE

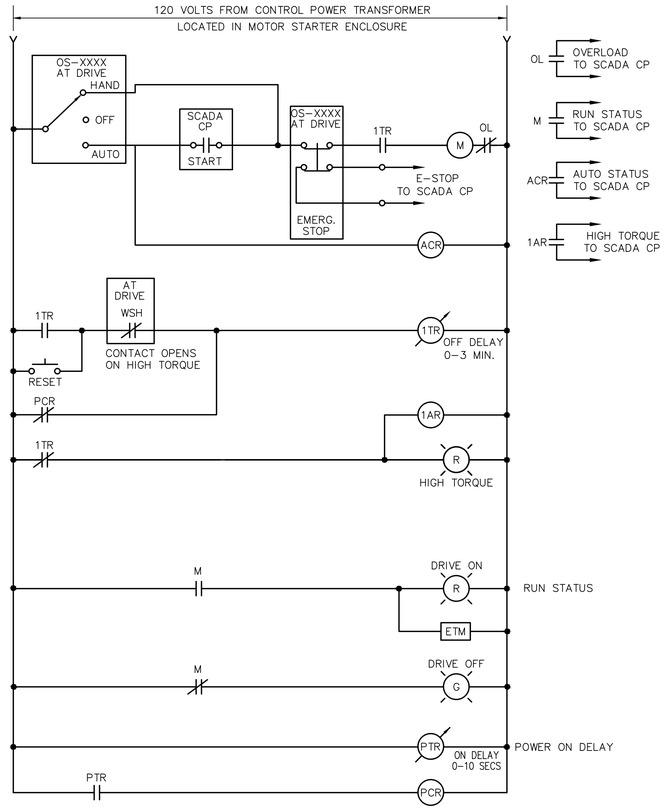

MOTOR CONTROL WIRING DIAGRAM
FINAL CLARIFIER DRIVES
NOT TO SCALE

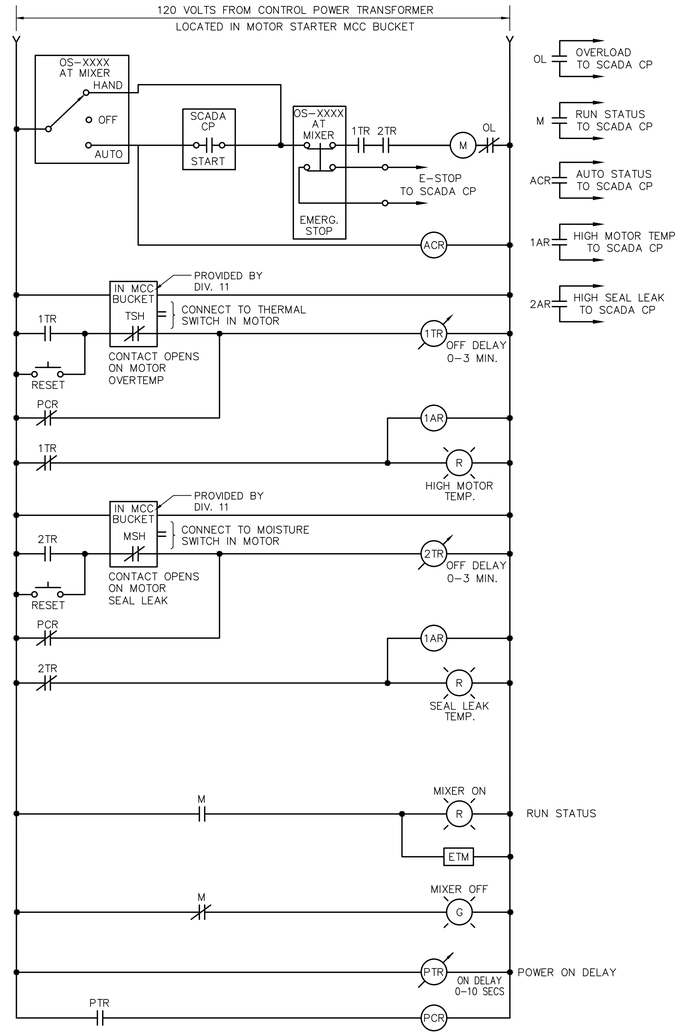

MOTOR CONTROL WIRING DIAGRAM
ANOXIC MIXERS
NOT TO SCALE

PREPARED BY

BETA
www.BETA-Inc.com

REGISTERED PROFESSIONAL

COMMONWEALTH OF MASSACHUSETTS
MICHAEL J. COTTER
ELECTRICAL
No. 40599
REGISTERED PROFESSIONAL ENGINEER

SUBCONSULTANT

SAR ENGINEERING, INC.
Mechanical/Electrical Engineers
150 Grossman Drive, Suite 309
Braintree, Massachusetts 02184
617 328-9215
web: www.sar.com

PROJECT

Taunton Wastewater Treatment Facility Improvements Phase 2

Taunton, MA

TITLE

ELECTRICAL MOTOR CONTROL WIRING DIAGRAMS

NO.	REVISIONS	DATE

DRAWN BY:	RB
DESIGNED BY:	MC
CHECKED BY:	MC
ISSUE DATE:	03/31/22
BETA JOB NO.:	6050

SCALE

NONE

UNLESS OTHERWISE NOTED OR CHANGED BY REPRODUCTION

SHEET NO.

E-0.13

3/30/2022 3:10 PM W:\YEAR - 2018\18009.00 - TAUNTON WWTF UPGRADES\ELECTRICAL DEPARTMENT\PHASE 2\18009.00 ELEC DIAGRAMS AND DETAILS - PHASE 2.DWG (BETA STB BW.STB)

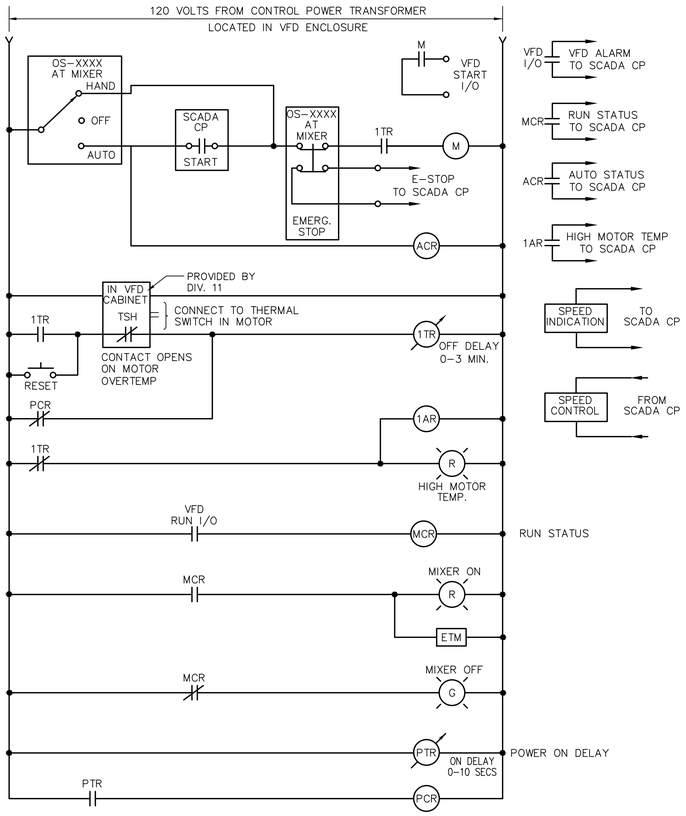

MOTOR CONTROL WIRING DIAGRAM
RE-AERATION MIXERS
NOT TO SCALE

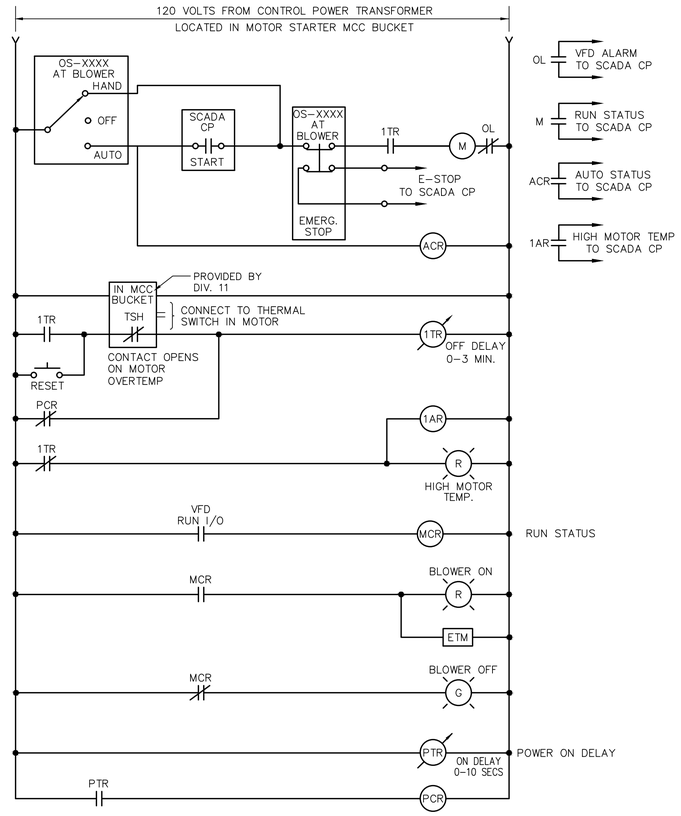

MOTOR CONTROL WIRING DIAGRAM
RE-AERATION BLOWERS
NOT TO SCALE

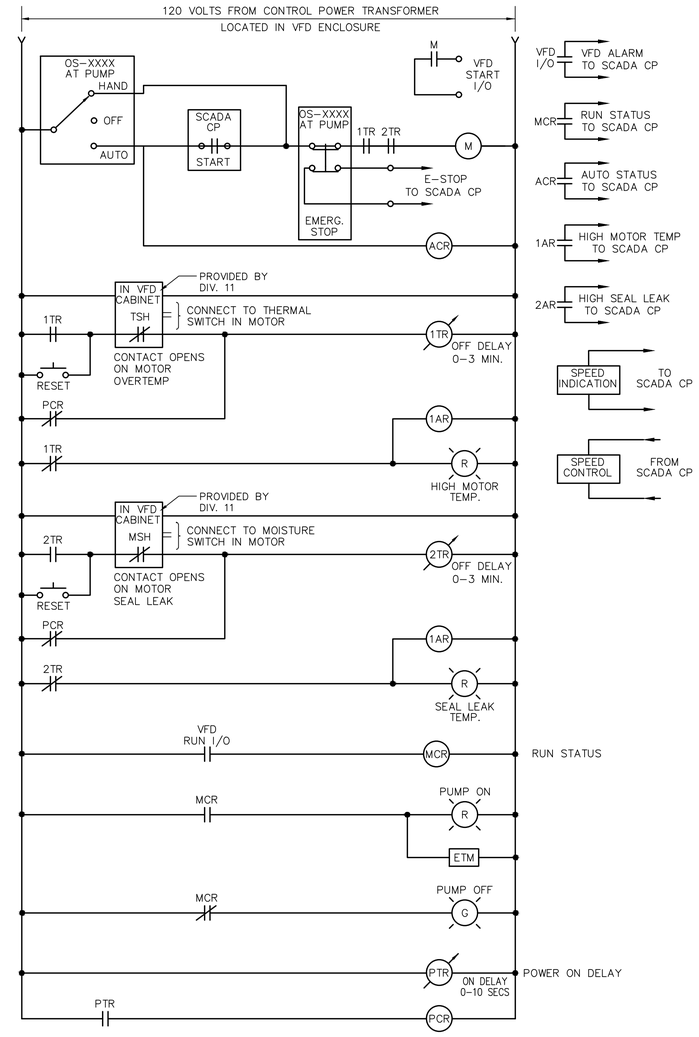

MOTOR CONTROL WIRING DIAGRAM
RECYCLE PUMPS
NOT TO SCALE

PREPARED BY

BETA
www.BETA-Inc.com

REGISTERED PROFESSIONAL

COMMONWEALTH OF MASSACHUSETTS
MICHAEL J. COTTER
ELECTRICAL
No. 40599
REGISTERED PROFESSIONAL ENGINEER

SUBCONSULTANT

SAR ENGINEERING, INC.
Mechanical/Electrical Engineers
150 Grossman Drive, Suite 309
Braintree, Massachusetts 02184
617 328-9215
web: www.sar.com

PROJECT

Taunton Wastewater Treatment Facility Improvements Phase 1

Taunton, MA

TITLE

ELECTRICAL MOTOR CONTROL WIRING DIAGRAMS

NO.	REVISIONS	DATE

DRAWN BY:	RB
DESIGNED BY:	MC
CHECKED BY:	MC
ISSUE DATE:	7/2/21
BETA JOB NO.:	6050

SCALE

UNLESS OTHERWISE NOTED OR CHANGED BY REPRODUCTION

SHEET NO.

E-0.14

3/30/2022 3:10 PM W:\YEAR - 2018\18009.00 - TAUNTON WWTF UPGRADES\ELECTRICAL DEPARTMENT\PHASE 2\18009.00 ELEC DIAGRAMS AND DETAILS - PHASE 2.DWG (BETA STB BW.STB)

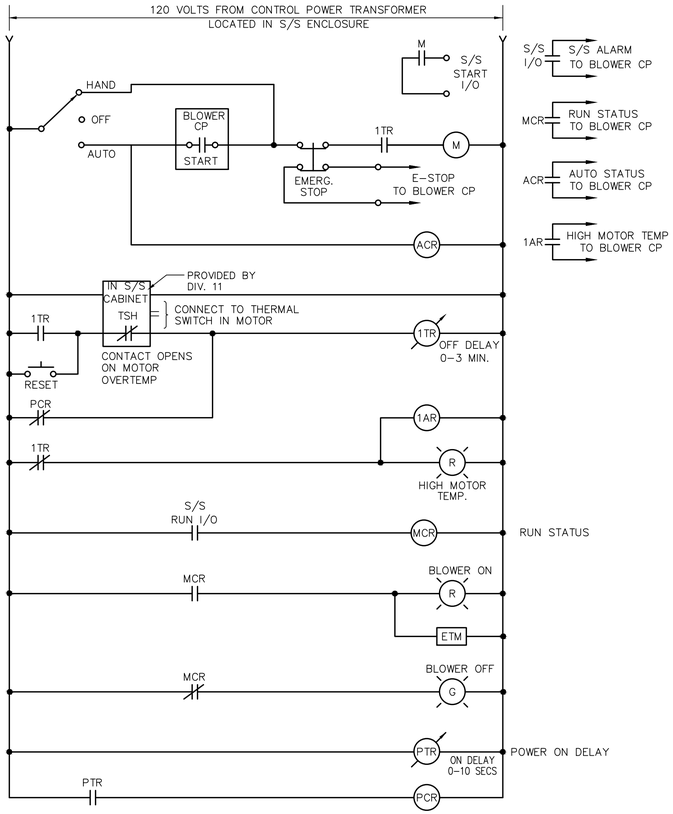

MOTOR CONTROL WIRING DIAGRAM
AERATION BLOWERS
NOT TO SCALE

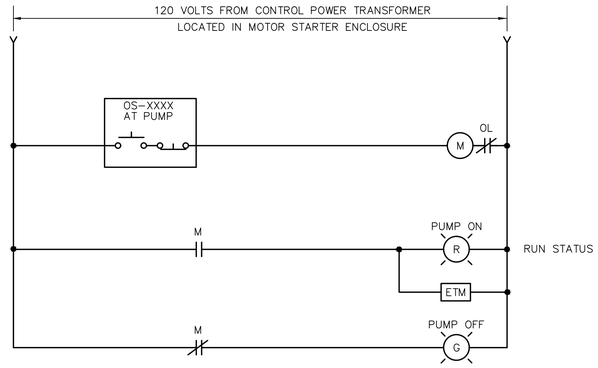

MOTOR CONTROL WIRING DIAGRAM
DEWATERING PUMPS
NOT TO SCALE

PREPARED BY

BETA
www.BETA-Inc.com

REGISTERED PROFESSIONAL

COMMONWEALTH OF MASSACHUSETTS
MICHAEL J. COTTER
ELECTRICAL
No. 40599
REGISTERED PROFESSIONAL ENGINEER

SUBCONSULTANT

SAR ENGINEERING, INC.
Mechanical/Electrical Engineers
150 Grossman Drive, Suite 309
Braintree, Massachusetts 02184
617 328-9215
web: www.sar.com

PROJECT

Taunton Wastewater Treatment Facility Improvements Phase 1

Taunton, MA

TITLE

ELECTRICAL MOTOR CONTROL WIRING DIAGRAMS

NO.	REVISIONS	DATE

DRAWN BY:	RB
DESIGNED BY:	MC
CHECKED BY:	MC
ISSUE DATE:	7/2/21
BETA JOB NO.:	6050

SCALE

UNLESS OTHERWISE NOTED OR CHANGED BY REPRODUCTION

SHEET NO. E-0.15

3/30/2022 3:10 PM W:\YEAR - 2018\18009.00 - TAUNTON WWTF UPGRADES\ELECTRICAL DEPARTMENT\PHASE 2\18009.00 ELEC DIAGRAMS AND DETAILS - PHASE 2.DWG (BETA STB BW.STB)

DUCT / CABLE SCHEDULE

DUCT NO.	SIZE	CONDUCTORS	FROM	TO
D1	1"	(6) #10, (2) #10 GND	VFD-3161, VFD-3162	IRP-3161, IRP-3162
D2	1"	(3) #12, (3) #10, #10 GND, #12 GND	MC-3101, MC-3151	ASM-3101, ASM-3151
D3	1"	(12) #12, (4) #12 GND	MC-3112, MC-3113, MC-9371, MC-9372	ASM-3112, ASM-3113, DWP-9371, DWP-9372
D4	1"	(4) #10, #10 GND	6LP1	TRAIN #1 AERATION VALVES
D5	1"	(6) #12, #12 GND	6LP1	TRAIN #1 ANALYZERS, FLOW METERS, BIOLOGICAL TANKS LIGHTS
D6	2"	(30) #14	VFD-3161, VFD-3162	IRP-3161, IRP-3162
D7	2"	(60) #14	MC-3101, MC-3151, MC-3112, MC-3113	ASM-3101, ASM-3151, ASM-3112, ASM-3113
D8	1"	(12) #14	RTU-3	TRAIN #1 & TRAIN #2 SLIDE GATES
D9	3"	(25) #16 TSP	RTU-3 & CP-6000	TRAIN #1 AERATION VALVES, FLOW METERS, ANALYZERS
D10	3"	PULL STRING	STUB UP AND CAP NEXT RTU-3	STUB UP AND CAP AT TRAIN #1 TANK
D11	1"	(6) #10, (2) #10 GND	VFD-3261, VFD-3262	IRP-3261, IRP-3262
D12	1"	(3) #12, (3) #10, #10 GND, #12 GND	MC-3213, MC-3251	ASM-3213, ASM-3251
D13	1"	(9) #12, (3) #12 GND	MC-3111, MC-3211, MC-3212	ASM-3111, ASM-3211, ASM-3212
D14	1"	(4) #10, #10 GND	6LP1	TRAIN #2 AERATION VALVES
D15	1"	(6) #12, #12 GND	6LP1	TRAIN #2 ANALYZERS, FLOW METERS, BIOLOGICAL TANKS RECEPTACLES
D16	1"	(30) #14	VFD-3261, VFD-3262	IRP-3261, IRP-3262
D17	2"	(70) #14	MC-3213, MC-3251, MC-3111, MC-3211, MC-3212	ASM-3213, ASM-3251, ASM-3111, ASM-3211, ASM-3212
D18	2"	(40) #14	RTU-3	MICRO-C PUMPS
D19	3"	(30) #16 TSP	RTU-3 & CP-6000	TRAIN #1 AERATION VALVES, FLOW METERS, ANALYZERS
D20	1"	(6) #12, #12 GND	6LP1	MICRO-C PUMPS, MICRO-C LEVEL TRANSMITTERS

DUCT / CABLE SCHEDULE

DUCT NO.	SIZE	CONDUCTORS	FROM	TO
D21	1"	(6) #12, (2) #12 GND	MC-3131, MC-3132	ASM-3131, ASM-3132
D22	1"	(12) #12, (4) #12 GND	MC-3231, MC-3232,MC-9373, MC-9374	ASM-3231, ASM-3232, DWP-9373, DWP-9374
D23	1"	(6) #12, #12 GND	6LP1	SEC. ANOXIC TANK ANALYZERS, LIGHTS, RECEPTACLES
D24	2"	(60) #14	MC-3131, MC-3132, MC-3231, MC-3231	ASM-3101, ASM-3151, ASM-3112, ASM-3113
D25	1"	(12) #14	RTU-3	SEC. ANOXIC TANKS SLIDE GATES
D26	2"	(6) #16 TSP	RTU-3	SEC. ANOXIC TANK ANALYZERS
D27	2"	PULL STRING	STUB UP AND CAP NEXT RTU-3	STUB UP AND CAP AT SEC. ANOXIC TANK
D28	2"	(6) #8, (2) #10 GND	VFD-3141, VFD-3142	MSA-3141, MSA-3142
D29	2"	(6) #8, (2) #10 GND	VFD-3143, VFD-3243	MSA-3143, MSA-3243
D30	2"	(6) #8, (2) #10 GND	VFD-3241, VFD-3242	MSA-3241, MSA-3242
D31	1"	(6) #12, (2) #12 GND	MC-9375, MC-9376	DWP-9375, DWP-9376
D32	1"	(6) #12, #12 GND	6LP1	RE-AERATION TANK ANALYZERS, LIGHTS, RECEPTACLES
D33	2"	(80) #14	VFD-3141, VFD-3142, VFD-3143, VFD-3243, VFD-3241, VFD-3242	MSA-3141, MSA-3142, MSA-3143, MSA-3243, MSA-3241, MSA-3242
D34	1"	(20) #14	RTU-3	RE-AERATION TANK SLIDE GATES
D35	2"	(4) #16 TSP	RTU-3	RE-AERATION TANK ANALYZERS
D36	2"	PULL STRING	STUB UP AND CAP NEXT RTU-3	STUB UP AND CAP AT SEC. ANOXIC TANK
D37	1"	(6) #12, (2) #12 GND	DIESEL TANK PUMP CONTROL PANEL	DIESEL STORAGE TANK PUMPS
D38	1"	PULL STRING	DIESEL TANK GAUGE LEAK DETECTION STATION PANEL	STUB UP AND CAP AT SEC. ANOXIC TANK
D39	1"	PULL STRING	DIESEL TANK GAUGE LEAK DETECTION STATION PANEL	STUB UP AND CAP AT SEC. ANOXIC TANK

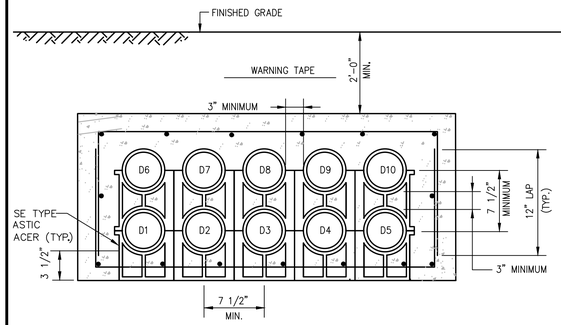

SECTION R-R

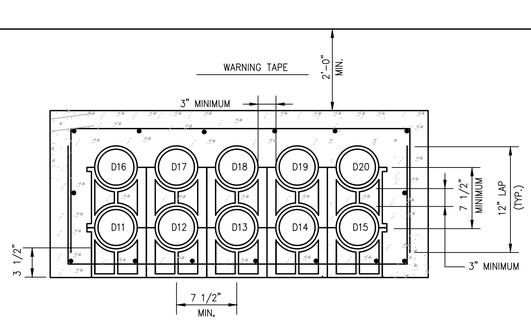

SECTION S-S

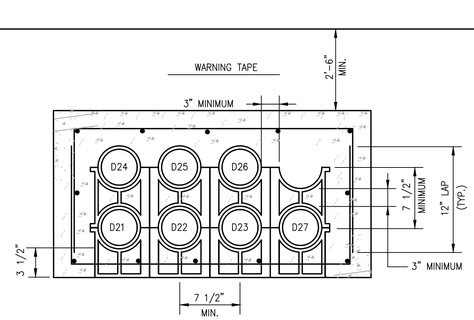

SECTION T-T

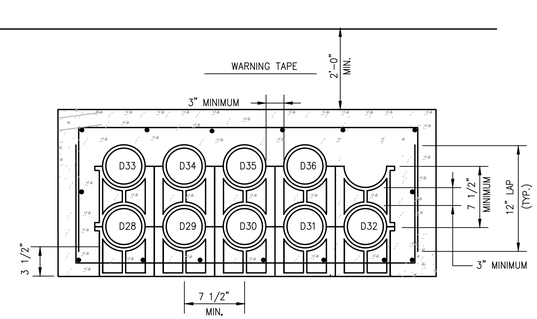

SECTION U-U

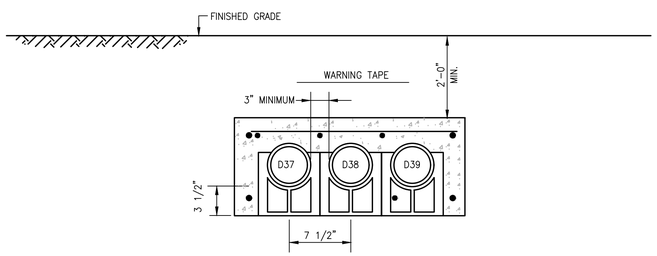

SECTION V-V

NOTES:

1. BACKFILL DUCT BANK IN LAYERS AND MANUALLY TAMP OR "PUDDLE" CONCRETE FILL. PROVIDE RED DUCT BANK MARKER TAPES, READING "CAUTION – ELECTRICAL LINES BELOW", OVER ENTIRE LENGTH OF DUCTLINE. LOCATE TAPES 12 INCHES BELOW GRADE. PROVIDE A TAPE FOR EVERY 12 INCHES OF WIDTH OF DUCTLINE.
2. A MINIMUM OF 12" SEPARATION SHALL BE KEPT BETWEEN DUCT BANK SECTIONS WITHIN SAME TRENCH.
3. A MINIMUM 3" OF CONCRETE SHALL KEPT BETWEEN CONDUITS AND THE PERIMETER OF ALL DUCTBANKS.

DUCTBANK SECTIONS

NO SCALE

PREPARED BY

BETA
www.BETA-Inc.com

REGISTERED PROFESSIONAL

COMMONWEALTH OF MASSACHUSETTS
MICHAEL J. COTTER
ELECTRICAL
No. 40999
REGISTERED PROFESSIONAL ENGINEER

SUBCONSULTANT

SAR ENGINEERING, INC.
Mechanical/Electrical Engineers
150 Grossman Drive, Suite 309
Braintree, Massachusetts 02184
617 328-9215
web: www.sar.com

PROJECT

Taunton Wastewater Treatment Facility Improvements Phase 1

Taunton, MA

TITLE

ELECTRICAL DUCTBANK SECTIONS

NO.	REVISIONS	DATE

DRAWN BY:	RB
DESIGNED BY:	MC
CHECKED BY:	MC
ISSUE DATE:	7/2/21
BETA JOB NO.:	6050

SCALE

UNLESS OTHERWISE NOTED OR CHANGED BY REPRODUCTION

SHEET NO. E-0.16

3/29/2022 2:09 PM W:\YEAR - 2018\18009.00 - TAUNTON WWTF UPGRADES\ELECTRICAL DEPARTMENT\PHASE 2\18009.00 ELEC DIAGRAMS AND DETAILS - PHASE 2.DWG (BETA - STB BW - STB)

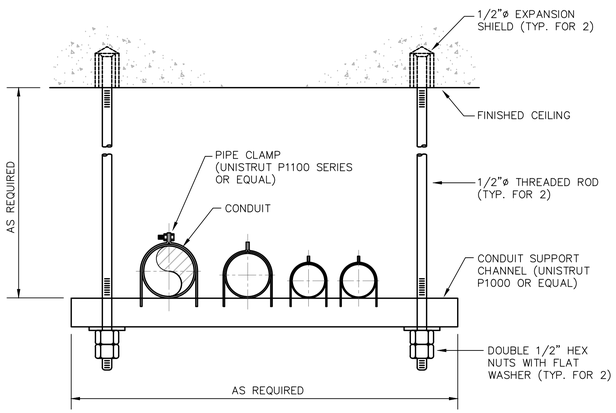

TYPICAL CONDUIT CEILING SUPPORT

NOT TO SCALE

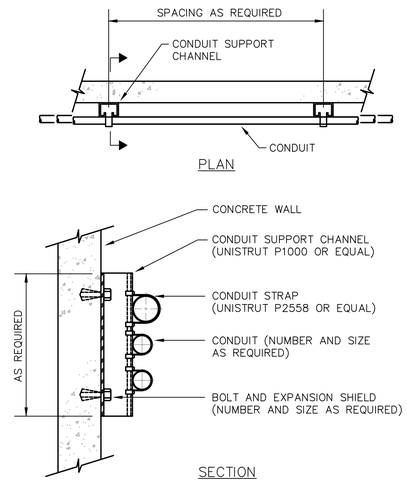

TYPICAL CONDUIT WALL SUPPORT

NOT TO SCALE

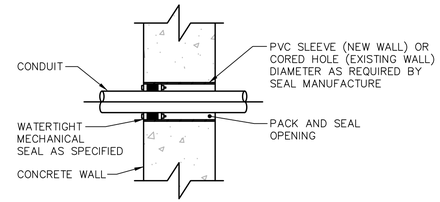

CONDUIT PENETRATION THROUGH NEW & EXISTING CONCRETE WALL

NOT TO SCALE

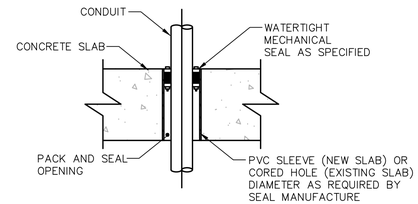

CONDUIT PENETRATION PASSING THROUGH NEW & EXISTING CONCRETE SLAB

NOT TO SCALE

GENERAI NOTES:

1. ALL MOUNTING BRACKETS, SUPPORTS, FASTENERS, AND ECT. WITHIN THE WET WELL SHALL BE STAINLESS STEEL.

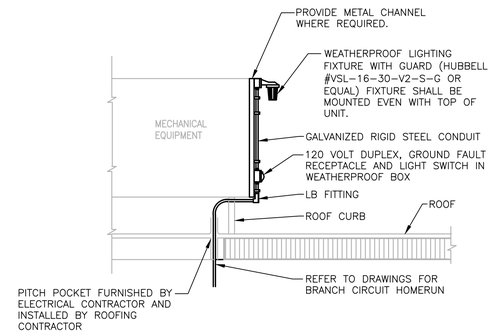

ROOFTOP LIGHT AND RECEPTACLE DETAIL

NOT TO SCALE

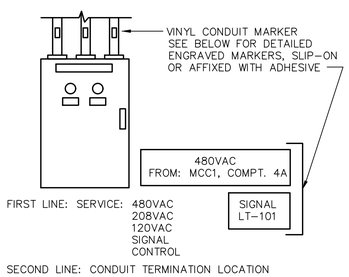

CONDUIT MARKER DETAIL

NOT TO SCALE

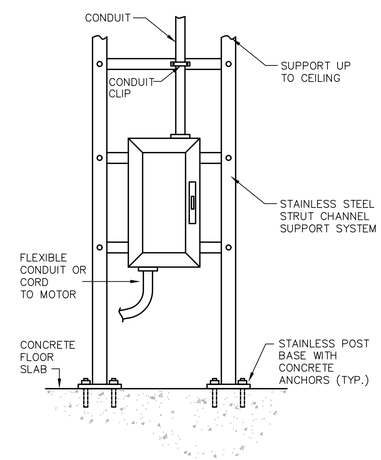

ELECTRICAL EQUIPMENT STANCHION MOUNTING DETAIL

NOT TO SCALE

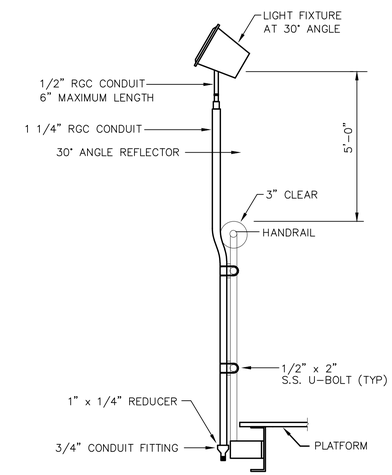

LIGHT FIXTURE AT CLARIFIERS RAIL MOUNTING DETAIL

NOT TO SCALE

POWER DUCT / CABLE SCHEDULE				
DUCT NO.	SIZE	CONDUCTORS	FROM	TO
DP12	EXIST. 3"	(4) 1/0, #6 GND	SLUDGE PUMPING STATION #1	EXISTING BLOWER BUILDING

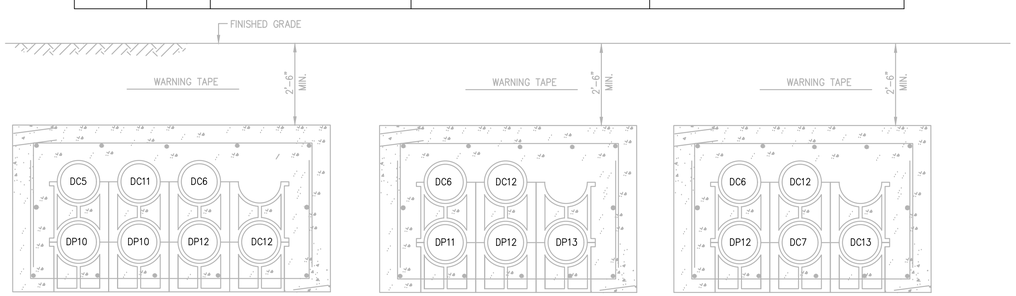

SECTION I-I

SECTION J-J

SECTION K-K

EXISTING DUCTBANK SECTIONS

NO SCALE

PREPARED BY

BETA
www.BETA-Inc.com

REGISTERED PROFESSIONAL

COMMONWEALTH OF MASSACHUSETTS
MICHAEL J. COTTER
ELECTRICAL
No. 40599
REGISTERED PROFESSIONAL ENGINEER

SUBCONSULTANT

SAR ENGINEERING, INC.
Mechanical/Electrical Engineers
150 Grossman Drive, Suite 309
Braintree, Massachusetts 02184
617 328-9215
web: www.sar.com

PROJECT

Taunton Wastewater Treatment Facility Improvements Phase 1

Taunton, MA

TITLE

ELECTRICAL DETAILS & EXISTING DUCTBANK SECTIONS

NO.	REVISIONS	DATE

DRAWN BY:	RB
DESIGNED BY:	MC
CHECKED BY:	MC
ISSUE DATE:	7/2/21
BETA JOB NO.:	6050

SCALE

UNLESS OTHERWISE NOTED OR CHANGED BY REPRODUCTION

SHEET NO. E-0.17

3/23/2022 2:01 PM W:\YEAR - 2018\18009.00 - TAUNTON WWTF UPGRADES\ELECTRICAL DEPARTMENT\PHASE 2\18009.00 ELEC DIAGRAMS AND DETAILS - PHASE 2.DWG (BETA STB BW.STB)

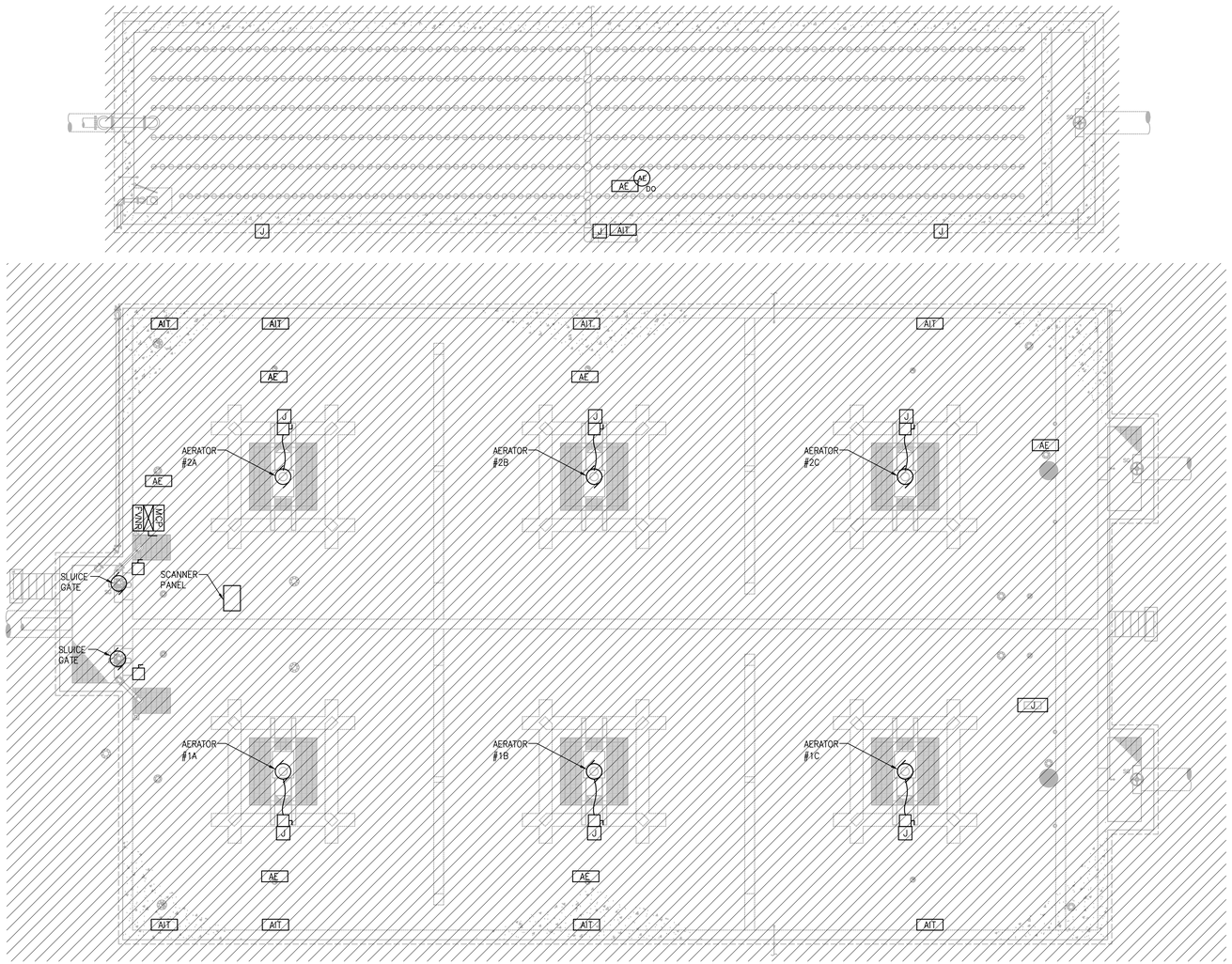

PLAN

SCALE: 1/8"= 1'-0"

PREPARED BY

BETA

www.BETA-Inc.com

REGISTERED PROFESSIONAL

COMMONWEALTH OF MASSACHUSETTS
MICHAEL J. COTTER
ELECTRICAL
No. 40999
REGISTERED PROFESSIONAL ENGINEER

SUBCONSULTANT

SAR ENGINEERING, INC.

Mechanical/Electrical Engineers
150 Grossman Drive, Suite 309
Braintree, Massachusetts 02184
617 328-9215
web: www.sar.com

PROJECT

Taunton Wastewater Treatment Facility Improvements Phase 2

Taunton, MA

TITLE

Electrical Demolition Aeration Tanks No. 1, 2, & 3 Plan

NO.	REVISIONS	DATE

DRAWN BY:	RLB
DESIGNED BY:	MC
CHECKED BY:	MC
ISSUE DATE:	03/31/22
BETA JOB NO.:	6050

SCALE

AS SHOWN

UNLESS OTHERWISE NOTED OR CHANGED BY REPRODUCTION

SHEET NO.

E-3.1

3/29/2022 1:43 PM W:\YEAR - 2018\18009.00 - TAUNTON WWTF UPGRADES\ELECTRICAL DEPARTMENT\PHASE 2\18009.00 ELEC AERATION TANKS - PHASE 2.DWG (BETA STB BW.STB)

NOTES:

1. PROVIDE SEPARATE PULL BOXES ON THE SIDE OF TANK FOR POWER WIRING, SIGNAL WIRING, AND CONTROL WIRING FOR INTERFACE TO DUCTBANK.

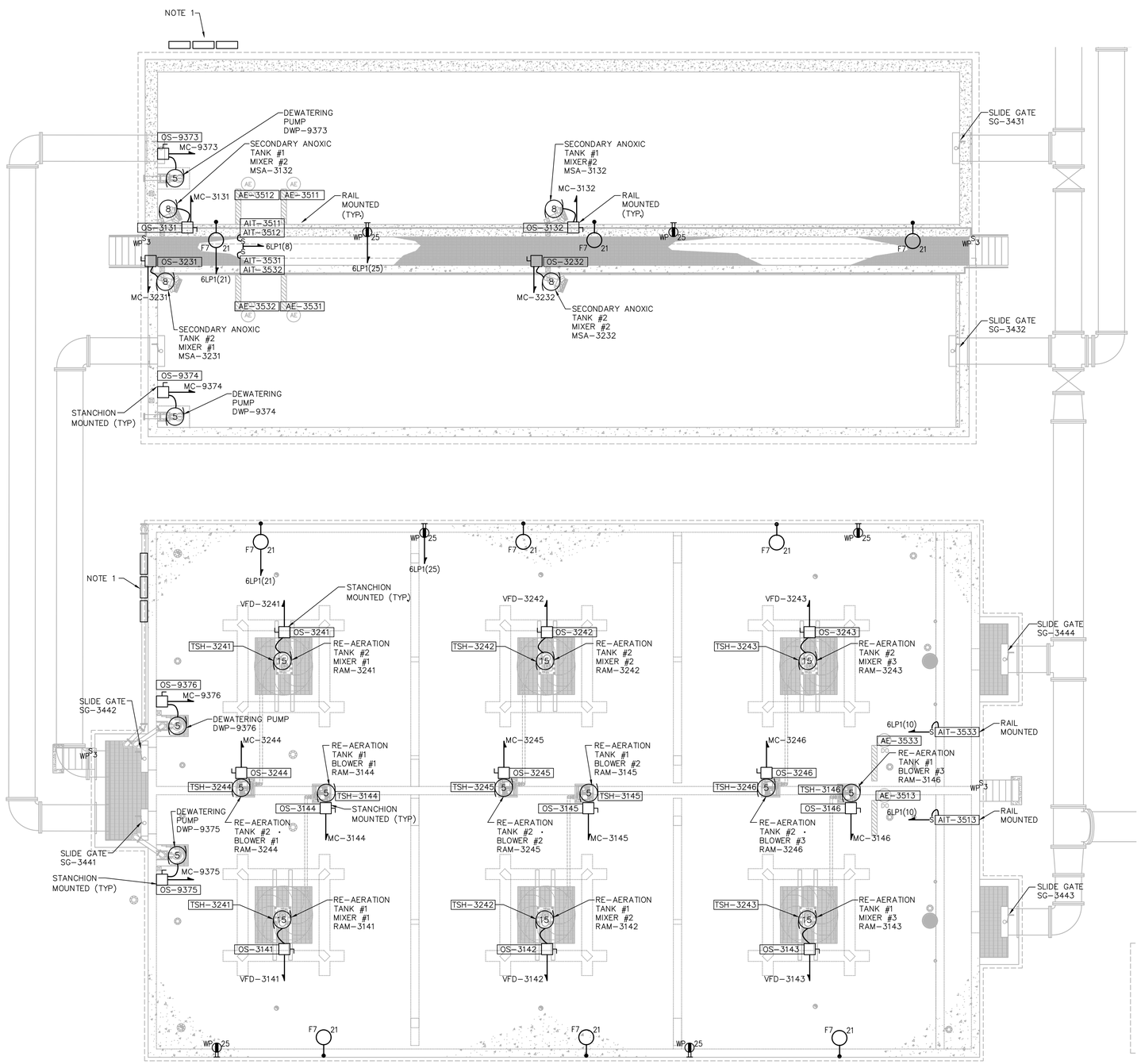

PLAN

SCALE: 1/8"= 1'-0"

PREPARED BY

BETA
www.BETA-Inc.com

REGISTERED PROFESSIONAL

COMMONWEALTH OF MASSACHUSETTS
MICHAEL J. COTTER
ELECTRICAL
No. 40999
REGISTERED PROFESSIONAL ENGINEER

SUBCONSULTANT

SAR ENGINEERING, INC.
Mechanical/Electrical Engineers
150 Grossman Drive, Suite 309
Braintree, Massachusetts 02184
617 328-9215
web: www.sar.com

PROJECT

Taunton Wastewater Treatment Facility Improvements Phase 2

Taunton, MA

TITLE

Electrical Secondary Anoxic & Re-Aeration Tanks No. 1 &2 Plans

NO.	REVISIONS	DATE

DRAWN BY:	RLB
DESIGNED BY:	MC
CHECKED BY:	MC
ISSUE DATE:	03/31/22
BETA JOB NO.:	6050

SCALE

AS SHOWN

UNLESS OTHERWISE NOTED OR CHANGED BY REPRODUCTION

SHEET NO.

E-3.2

3/30/2022 3:18 PM W:\YEAR - 2018\18009.00 - TAUNTON WWTF UPGRADES\ELECTRICAL DEPARTMENT\PHASE 2\18009.00 ELEC AERATION TANKS - PHASE 2.DWG (BETA STB BW.STB)

NOTES:

1. PROVIDE SEPARATE PULL BOXES ON THE SIDE OF TANK FOR POWER WIRING, SIGNAL WIRING, AND CONTROL WIRING FOR INTERFACE TO DUCTBANK.

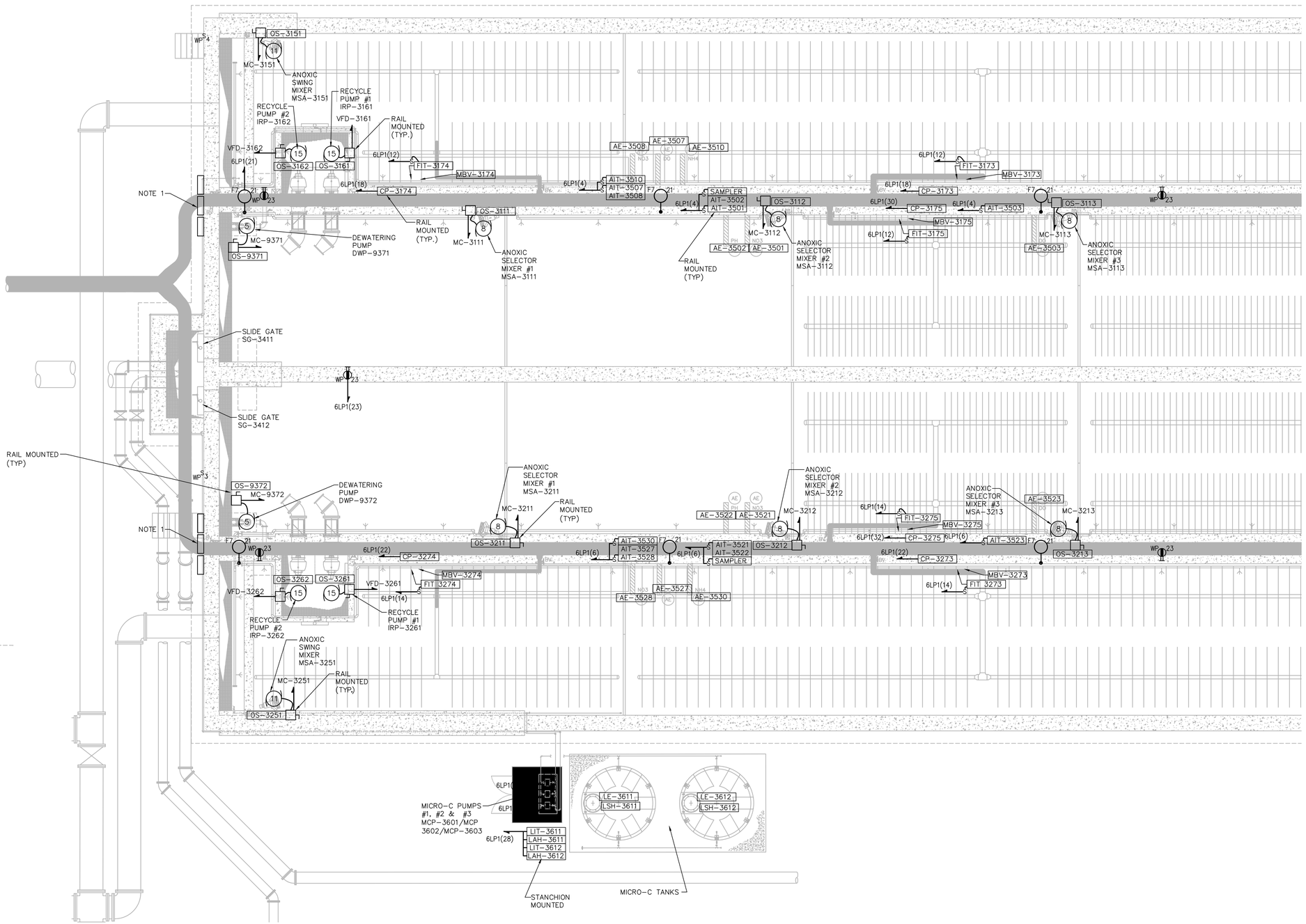

PLAN

SCALE: 1/8"= 1'-0"

PREPARED BY

BETA
www.BETA-Inc.com

REGISTERED PROFESSIONAL

COMMONWEALTH OF MASSACHUSETTS
MICHAEL J. COTTER
ELECTRICAL
No. 40599
REGISTERED PROFESSIONAL ENGINEER

SUBCONSULTANT

SAR ENGINEERING, INC.
Mechanical/Electrical Engineers
150 Grossman Drive, Suite 309
Braintree, Massachusetts 02184
617 328-9215
web: www.sar.com

PROJECT

Taunton Wastewater Treatment Facility Improvements Phase 2

Taunton, MA

TITLE

Electrical Biological Treatment Reactor Part Plan I

NO.	REVISIONS	DATE

DRAWN BY:	RLB
DESIGNED BY:	MC
CHECKED BY:	MC
ISSUE DATE:	03/31/22
BETA JOB NO.:	6050

SCALE

AS SHOWN

UNLESS OTHERWISE NOTED OR CHANGED BY REPRODUCTION

SHEET NO.

E-3.3

3/30/2022 3:19 PM W:\YEAR - 2018\18009.00 - TAUNTON WWTF UPGRADES\ELECTRICAL DEPARTMENT\PHASE 2\18009.00 ELEC AERATION TANKS - PHASE 2.DWG (BETA STB BW.STB)

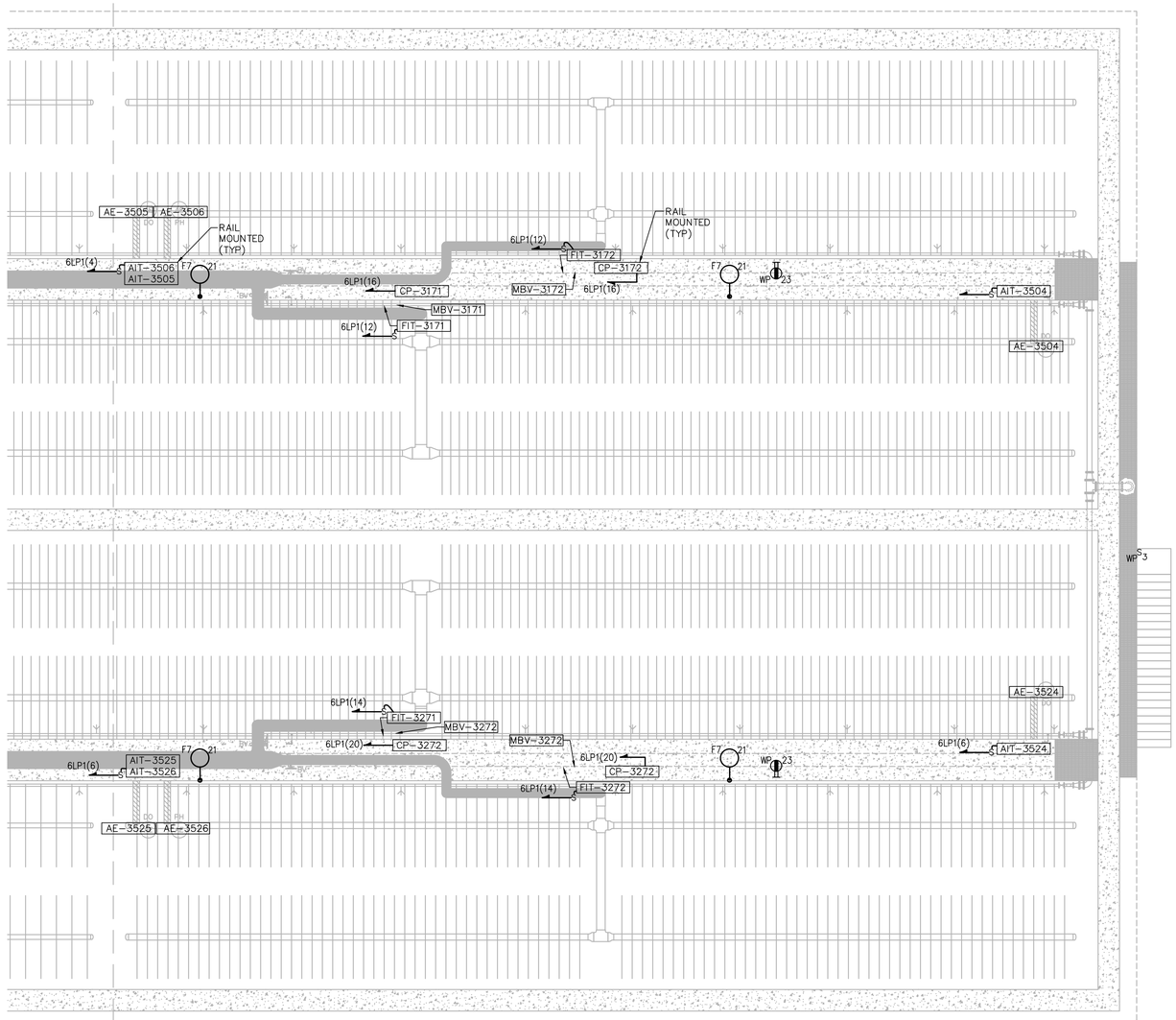

PLAN

SCALE: 1/8"= 1'-0"

PREPARED BY

BETA
www.BETA-Inc.com

REGISTERED PROFESSIONAL

COMMONWEALTH OF MASSACHUSETTS
MICHAEL J. COTTER
ELECTRICAL
No. 40999
REGISTERED PROFESSIONAL ENGINEER

SUBCONSULTANT

SAR ENGINEERING, INC.

Mechanical/Electrical Engineers
150 Grossman Drive, Suite 309
Braintree, Massachusetts 02184
617 328-9215
web: www.sar.com

PROJECT

Taunton Wastewater Treatment Facility Improvements Phase 2

Taunton, MA

TITLE

Electrical Biological Treatment Reactor Part Plan II

NO.	REVISIONS	DATE

DRAWN BY:	RLB
DESIGNED BY:	MC
CHECKED BY:	MC
ISSUE DATE:	03/31/22
BETA JOB NO.:	6050

SCALE

AS SHOWN

UNLESS OTHERWISE NOTED OR CHANGED BY REPRODUCTION

SHEET NO.

E-3.4

3/30/2022 3:20 PM W:\YEAR - 2018\18009.00 - TAUNTON WWTF UPGRADES\ELECTRICAL DEPARTMENT\PHASE 2\18009.00 ELEC AERATION TANKS - PHASE 2.DWG (BETA STB BW.STB)

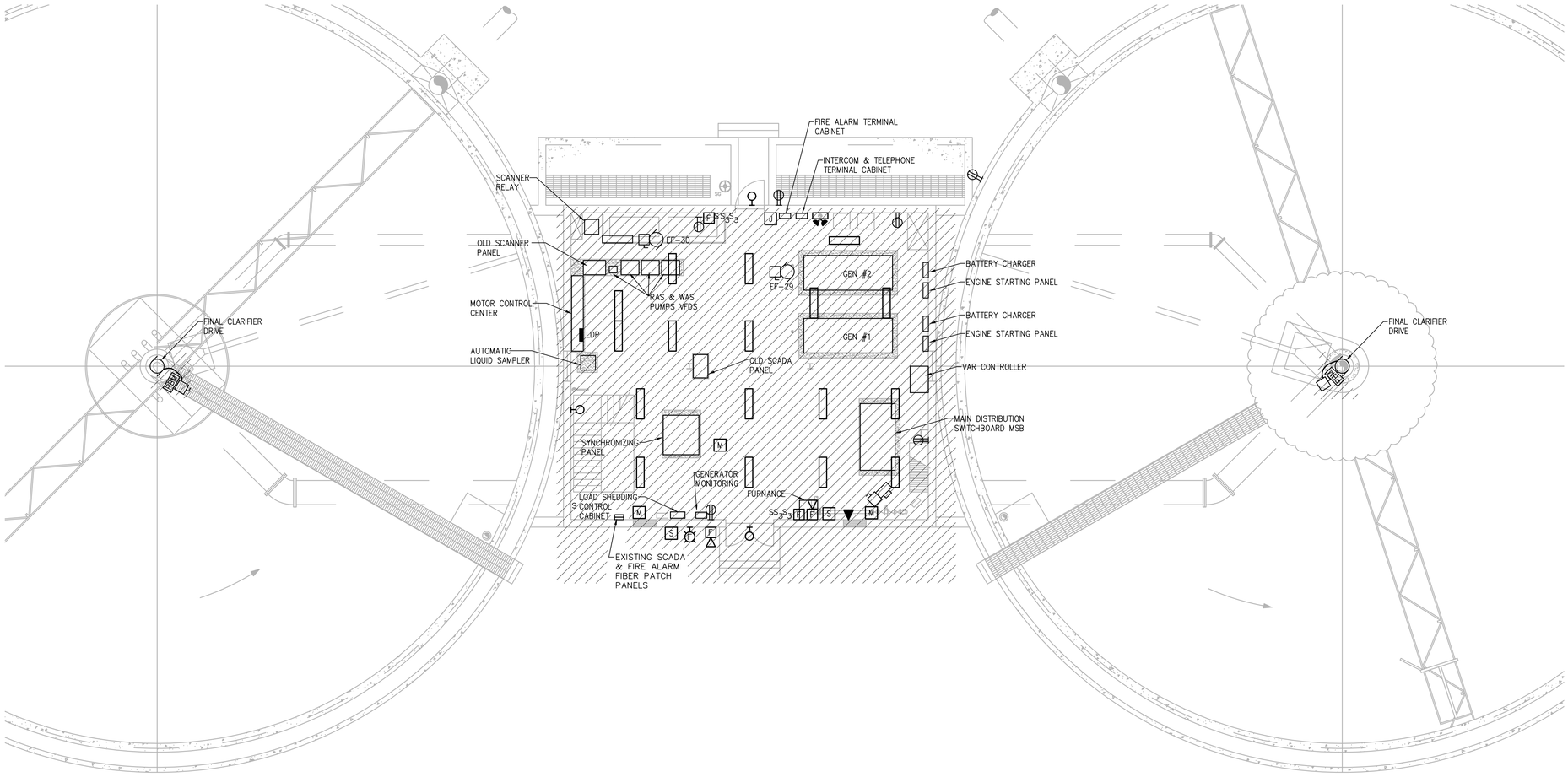

UPPER LEVEL PLAN

SCALE: 1/8"= 1'-0"

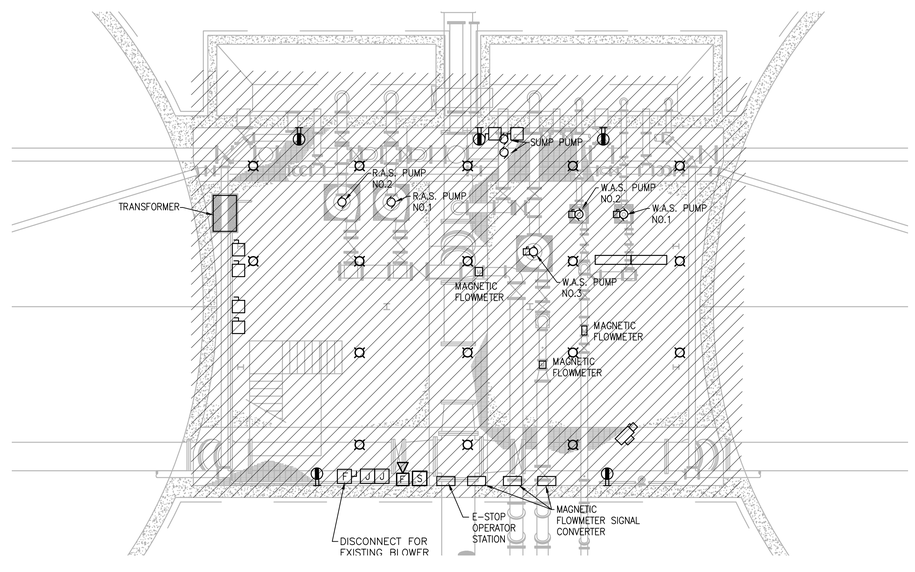

LOWER LEVEL PLAN

SCALE: 1/8"= 1'-0"

PREPARED BY

BETA
www.BETA-Inc.com

REGISTERED PROFESSIONAL

COMMONWEALTH OF MASSACHUSETTS
MICHAEL J. COTTER
ELECTRICAL
No. 40999
REGISTERED PROFESSIONAL ENGINEER

SUBCONSULTANT

SAR ENGINEERING, INC.

Mechanical/Electrical Engineers
150 Grossman Drive, Suite 309
Braintree, Massachusetts 02184
617 328-9215
web: www.sar.com

PROJECT

Taunton Wastewater Treatment Facility Improvements Phase 2

Taunton, MA

TITLE

Electrical Demolition Final Clarifiers No. 1 & 2 Plan & Sludge Pump Station No.1 Plan

NO.	REVISIONS	DATE

DRAWN BY:	RLB
DESIGNED BY:	MC
CHECKED BY:	MC
ISSUE DATE:	03/31/22
BETA JOB NO.:	6050

SCALE

NONE

UNLESS OTHERWISE NOTED OR CHANGED BY REPRODUCTION

SHEET NO.

E-4.1

3/30/2022 3:21 PM W:\YEAR - 2018\18009.00 - TAUNTON WWTF UPGRADES\ELECTRICAL DEPARTMENT\PHASE 2\18009.00 ELEC FINAL CLARIFIERS & SECONDARY SLUDGE PS - PHASE 2.DWG (BETA STB BW.STB)

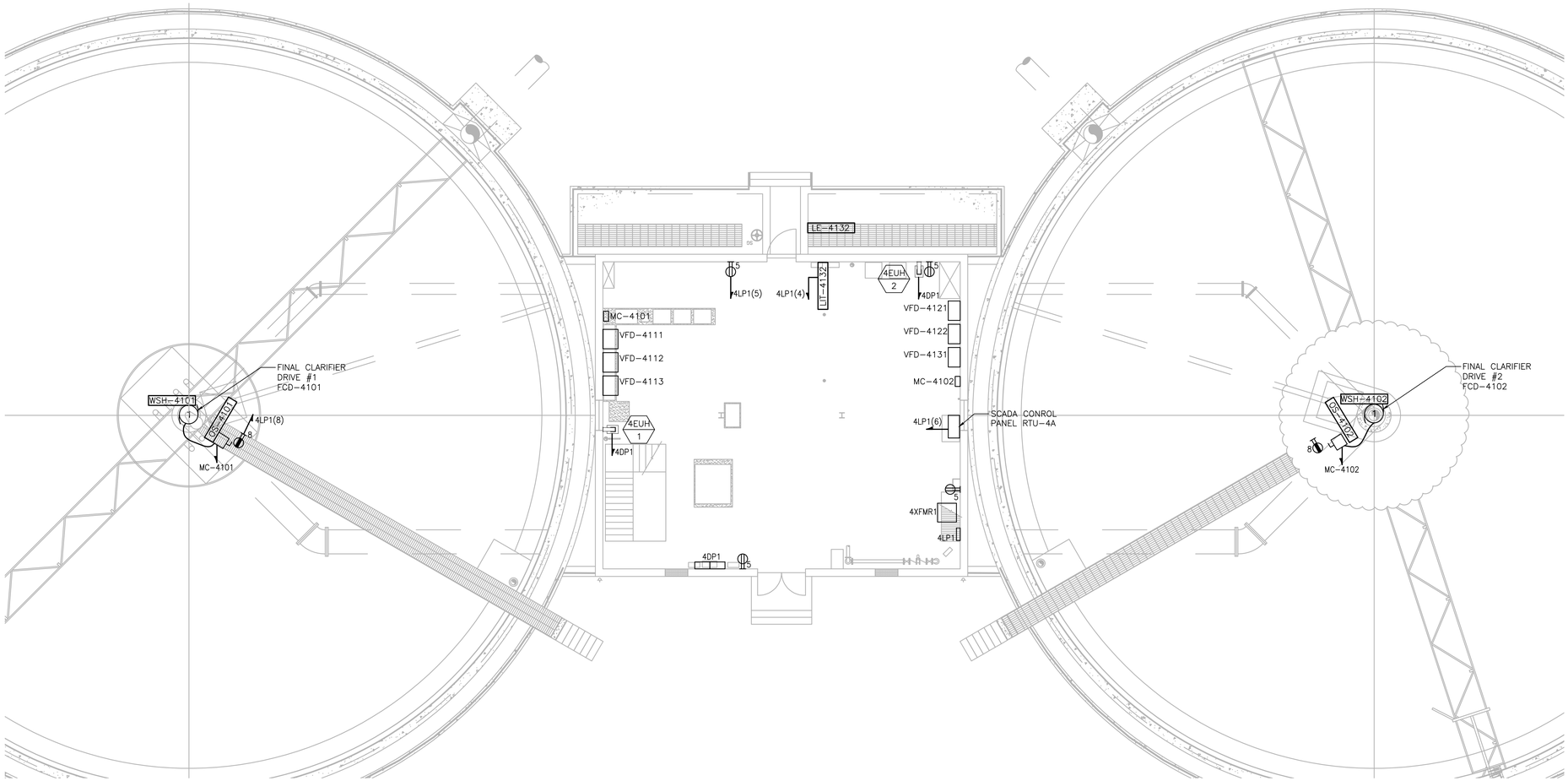

UPPER LEVEL PLAN

SCALE: 1/8"= 1'-0"

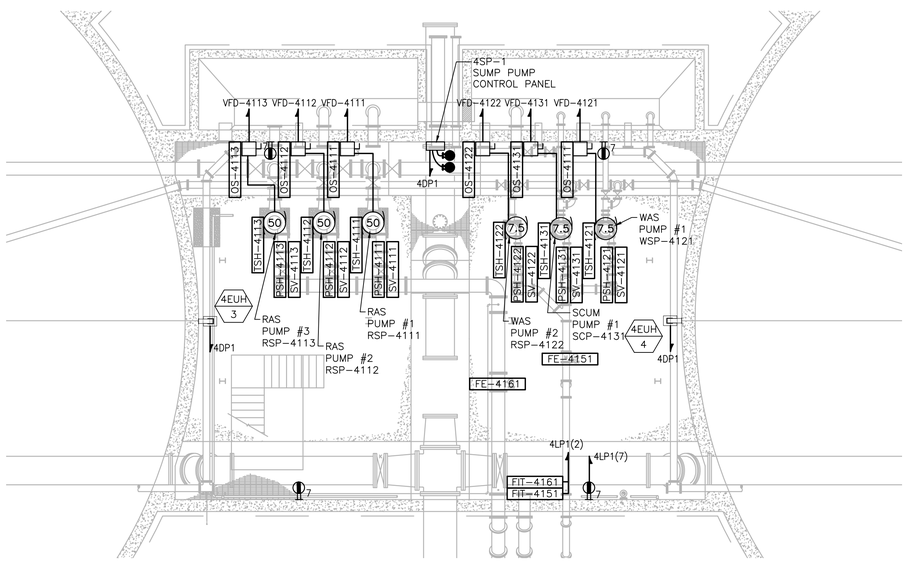

LOWER LEVEL PLAN

SCALE: 1/8"= 1'-0"

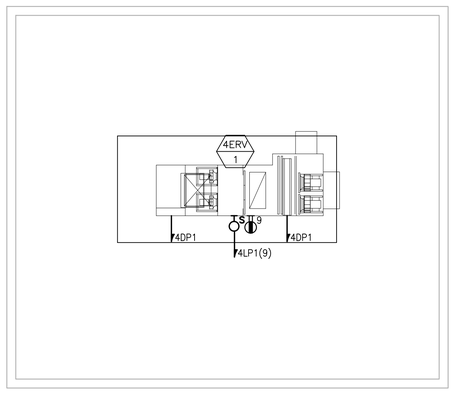

ROOF PLAN

SCALE: 1/8"= 1'-0"

PREPARED BY

BETA
www.BETA-Inc.com

REGISTERED PROFESSIONAL

COMMONWEALTH OF MASSACHUSETTS
MICHAEL J. COTTER
ELECTRICAL
No. 40599
REGISTERED PROFESSIONAL ENGINEER

SUBCONSULTANT

SAR ENGINEERING, INC.
Mechanical/Electrical Engineers
150 Grossman Drive, Suite 309
Braintree, Massachusetts 02184
617 328-9215
web: www.sar.com

PROJECT

Taunton Wastewater Treatment Facility Improvements Phase 2

Taunton, MA

TITLE

Electrical Final Clarifiers No.1 & 2 Plan & Sludge Pump Station No.1 Power Plan

NO.	REVISIONS	DATE

DRAWN BY:	RLB
DESIGNED BY:	MC
CHECKED BY:	MC
ISSUE DATE:	03/31/22
BETA JOB NO.:	6050

SCALE

NONE

UNLESS OTHERWISE NOTED OR CHANGED BY REPRODUCTION

SHEET NO.

E-4.2

3/30/2022 3:21 PM W:\YEAR - 2018\18009.00 - TAUNTON WWTF UPGRADES\ELECTRICAL DEPARTMENT\PHASE 2\18009.00 ELEC FINAL CLARIFIERS & SECONDARY SLUDGE PS - PHASE 2.DWG (BETA STB BW.STB)

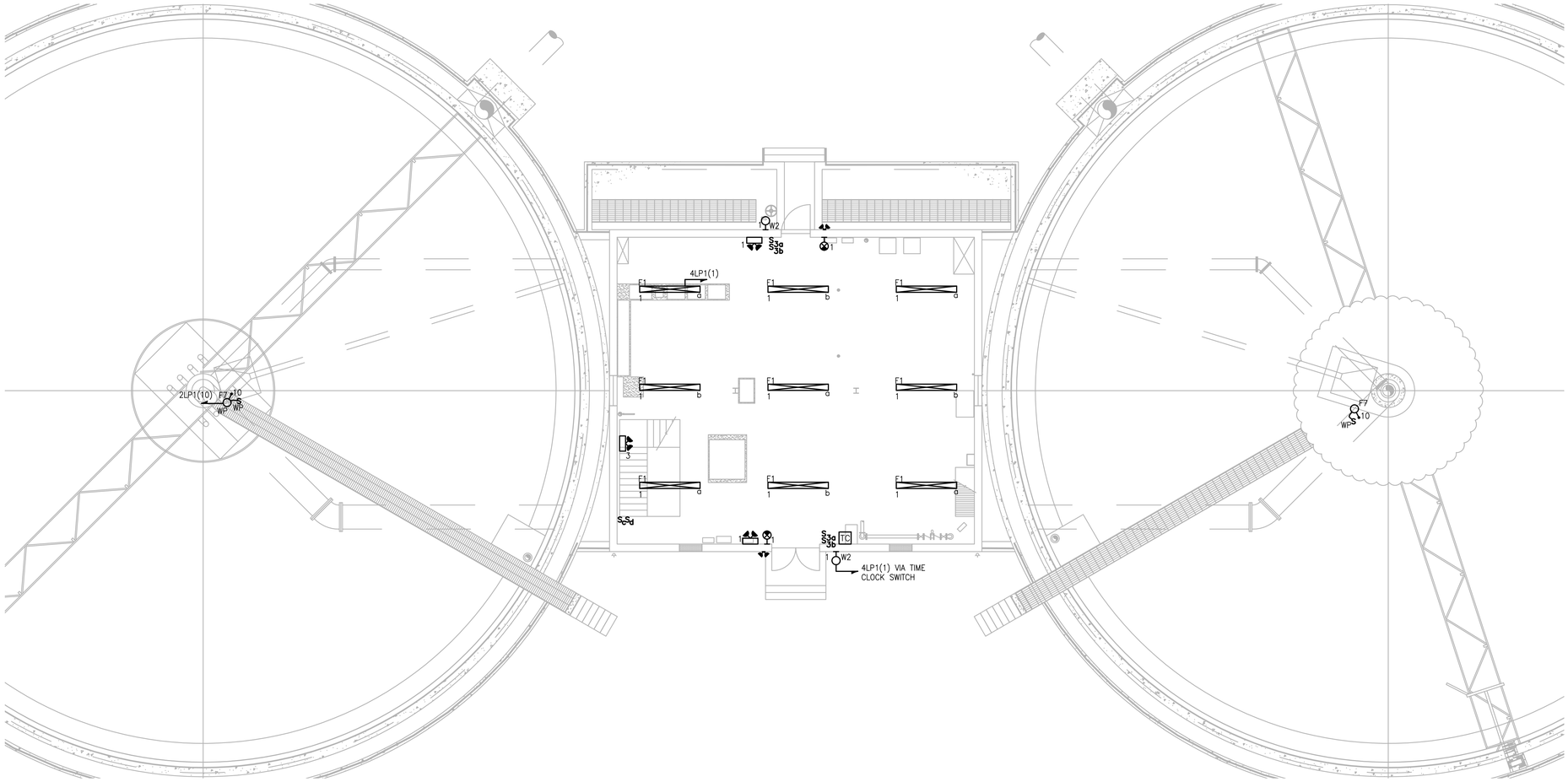

UPPER LEVEL PLAN

SCALE: 1/8"= 1'-0"

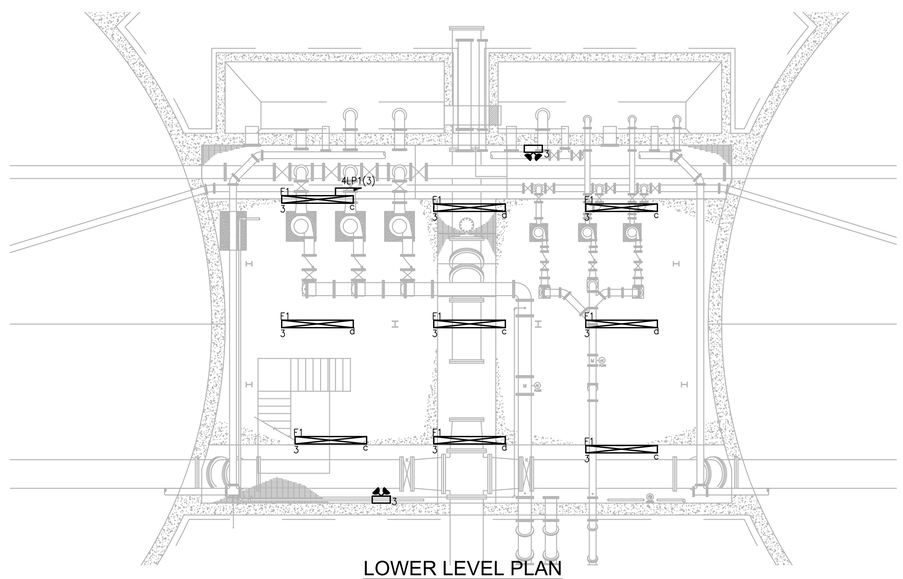

LOWER LEVEL PLAN

SCALE: 1/8"= 1'-0"

PREPARED BY

BETA

www.BETA-Inc.com

REGISTERED PROFESSIONAL

COMMONWEALTH OF MASSACHUSETTS
MICHAEL J. COTTER
ELECTRICAL
No. 40999
REGISTERED PROFESSIONAL ENGINEER

SUBCONSULTANT

SAR ENGINEERING, INC.

Mechanical/Electrical Engineers
150 Grossman Drive, Suite 309
Braintree, Massachusetts 02184
617 328-9215
web: www.sar.com

PROJECT

Taunton Wastewater Treatment Facility Improvements Phase 2

Taunton, MA

TITLE

Electrical Final Clarifiers No. 1 & 2 Plan & Sludge Pump Station No.1 Lighting Plan

NO.	REVISIONS	DATE

DRAWN BY:	RLB
DESIGNED BY:	MC
CHECKED BY:	MC
ISSUE DATE:	03/31/22
BETA JOB NO.:	6050

SCALE

NONE

UNLESS OTHERWISE NOTED OR CHANGED BY REPRODUCTION

SHEET NO.

E-4.3

3/30/2022 3:22 PM W:\YEAR - 2018\18009.00 - TAUNTON WWTF UPGRADES\ELECTRICAL DEPARTMENT\PHASE 2\18009.00 ELEC FINAL CLARIFIERS & SECONDARY SLUDGE PS - PHASE 2.DWG (BETA STB BW.STB)

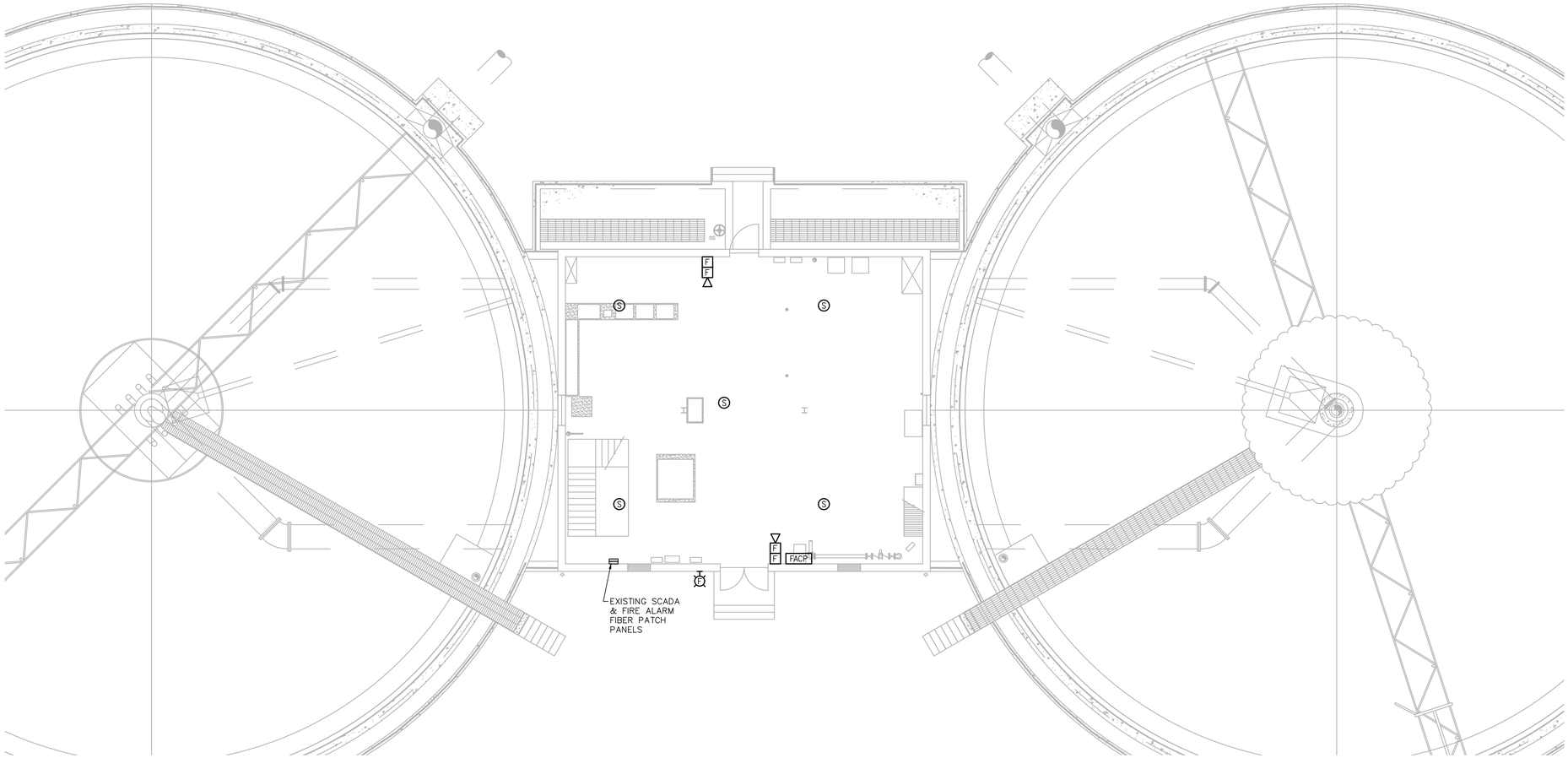

UPPER LEVEL PLAN

SCALE: 1/8"= 1'-0"

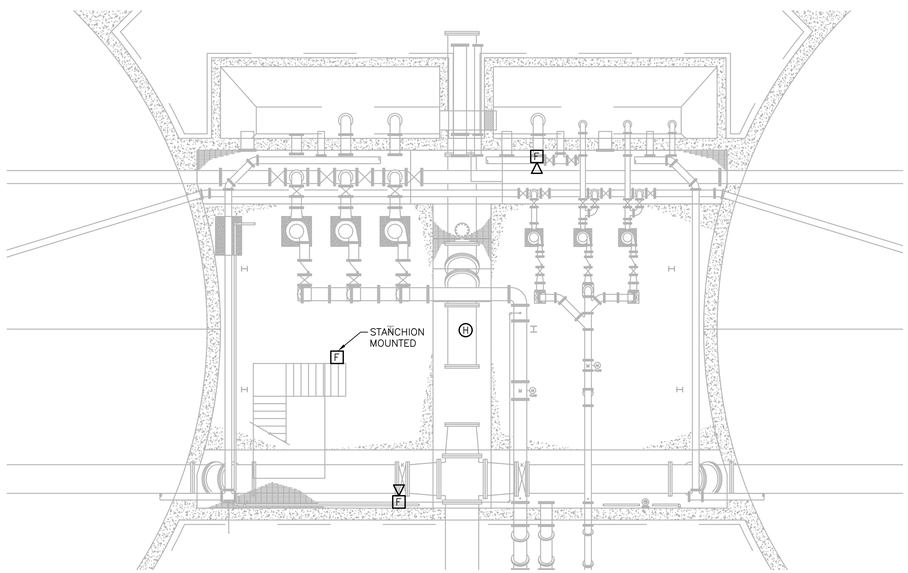

LOWER LEVEL PLAN

SCALE: 1/8"= 1'-0"

PREPARED BY

BETA

www.BETA-Inc.com

REGISTERED PROFESSIONAL

COMMONWEALTH OF MASSACHUSETTS
MICHAEL J. COTTER
ELECTRICAL
No. 40599
REGISTERED PROFESSIONAL ENGINEER

SUBCONSULTANT

SAR ENGINEERING, INC.

Mechanical/Electrical Engineers
150 Grossman Drive, Suite 309
Braintree, Massachusetts 02184
617 328-9215
web: www.sar.com

PROJECT

Taunton Wastewater Treatment Facility Improvements Phase 2

Taunton, MA

TITLE

Electrical Final Clarifiers No. 1 & 2 Plan & Sludge Pump Station No.1 Fire Alarm Plan

NO.	REVISIONS	DATE

DRAWN BY:	RLB
DESIGNED BY:	MC
CHECKED BY:	MC
ISSUE DATE:	03/31/22
BETA JOB NO.:	6050

SCALE

NONE

UNLESS OTHERWISE NOTED OR CHANGED BY REPRODUCTION

SHEET NO.

E-4.4

3/30/2022 3:22 PM W:\YEAR - 2018\18009.00 - TAUNTON WWTF UPGRADES\ELECTRICAL DEPARTMENT\PHASE 2\18009.00 ELEC FINAL CLARIFIERS & SECONDARY SLUDGE PS - PHASE 2.DWG (BETA STB BW.STB)

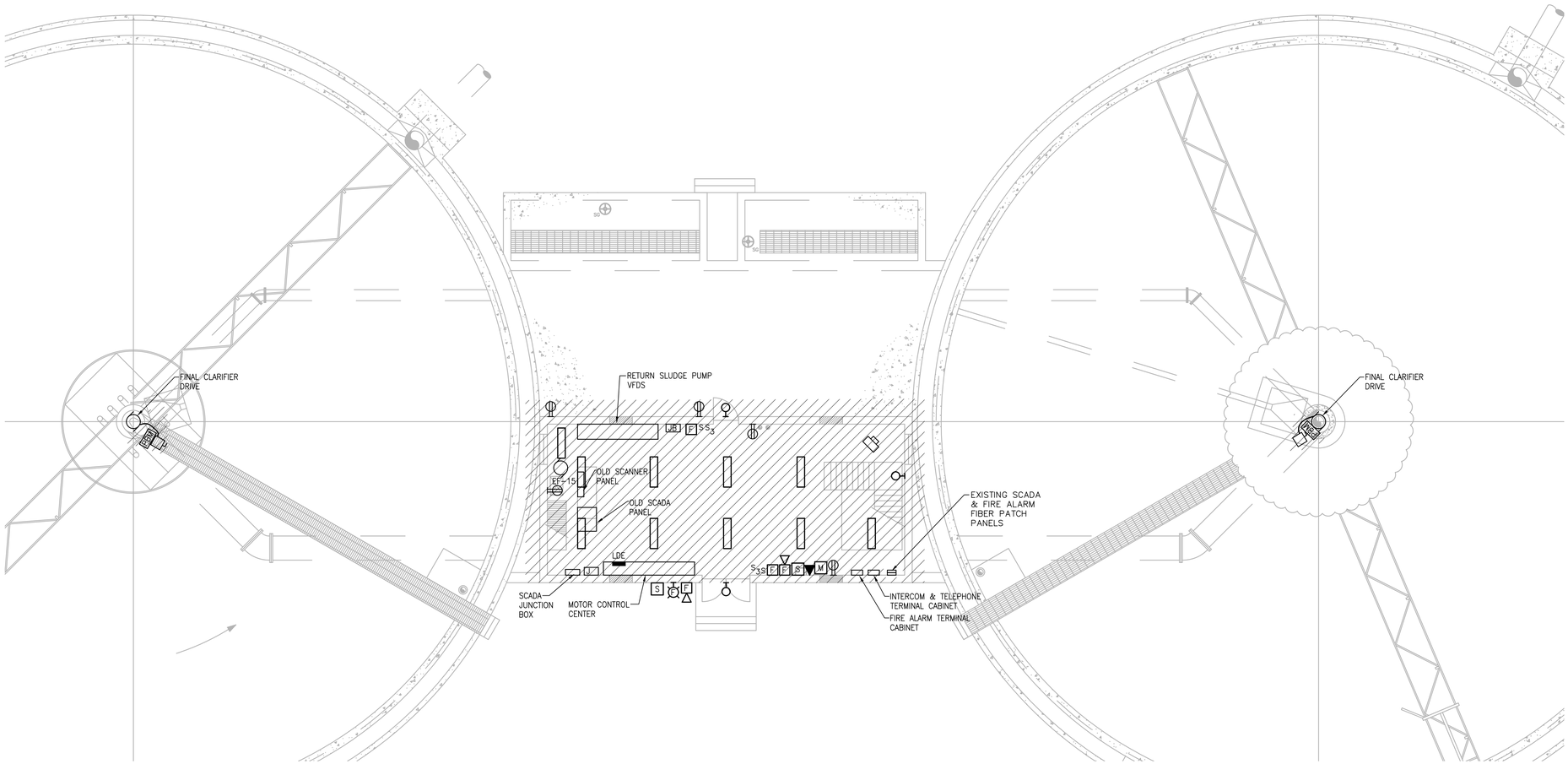

UPPER LEVEL PLAN

SCALE: 1/8"= 1'-0"

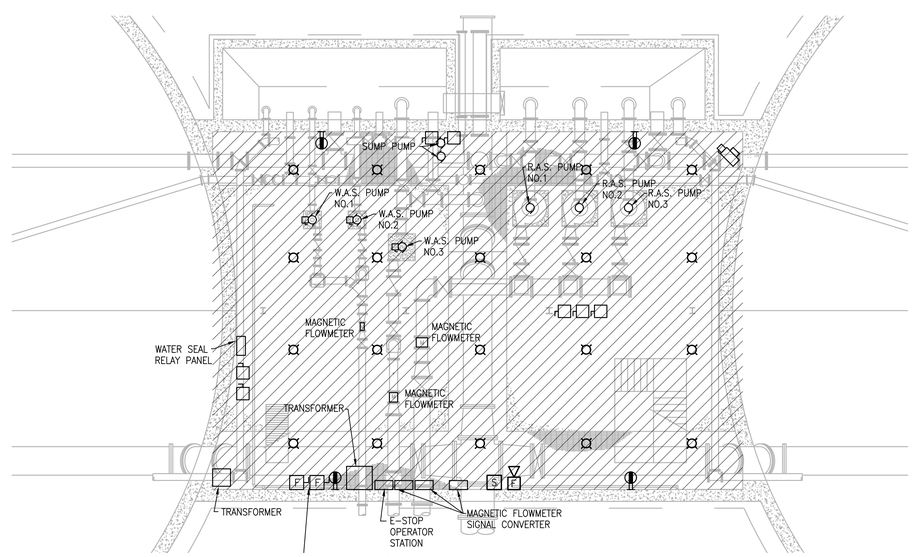

LOWER LEVEL PLAN

SCALE: 1/8"= 1'-0"

PREPARED BY

BETA
www.BETA-Inc.com

REGISTERED PROFESSIONAL

COMMONWEALTH OF MASSACHUSETTS
MICHAEL J. COTTER
ELECTRICAL
No. 40599
REGISTERED PROFESSIONAL ENGINEER

SUBCONSULTANT

SAR ENGINEERING, INC.

Mechanical/Electrical Engineers
150 Grossman Drive, Suite 309
Braintree, Massachusetts 02184
617 328-9215
web: www.sar.com

PROJECT

Taunton Wastewater Treatment Facility Improvements Phase 2

Taunton, MA

TITLE

Electrical Demolition Final Clarifiers No. 3 & 4 Plan & Sludge Pump Station No.2 Plan

NO.	REVISIONS	DATE

DRAWN BY:	RLB
DESIGNED BY:	MC
CHECKED BY:	MC
ISSUE DATE:	03/31/22
BETA JOB NO.:	6050

SCALE

NONE

UNLESS OTHERWISE NOTED OR CHANGED BY REPRODUCTION

SHEET NO.

E-4.5

3/30/2022 3:22 PM W:\YEAR - 2018\18009.00 - TAUNTON WWTF UPGRADES\ELECTRICAL DEPARTMENT\PHASE 2\18009.00 ELEC FINAL CLARIFIERS & SECONDARY SLUDGE PS - PHASE 2.DWG (BETA STB BW.STB)

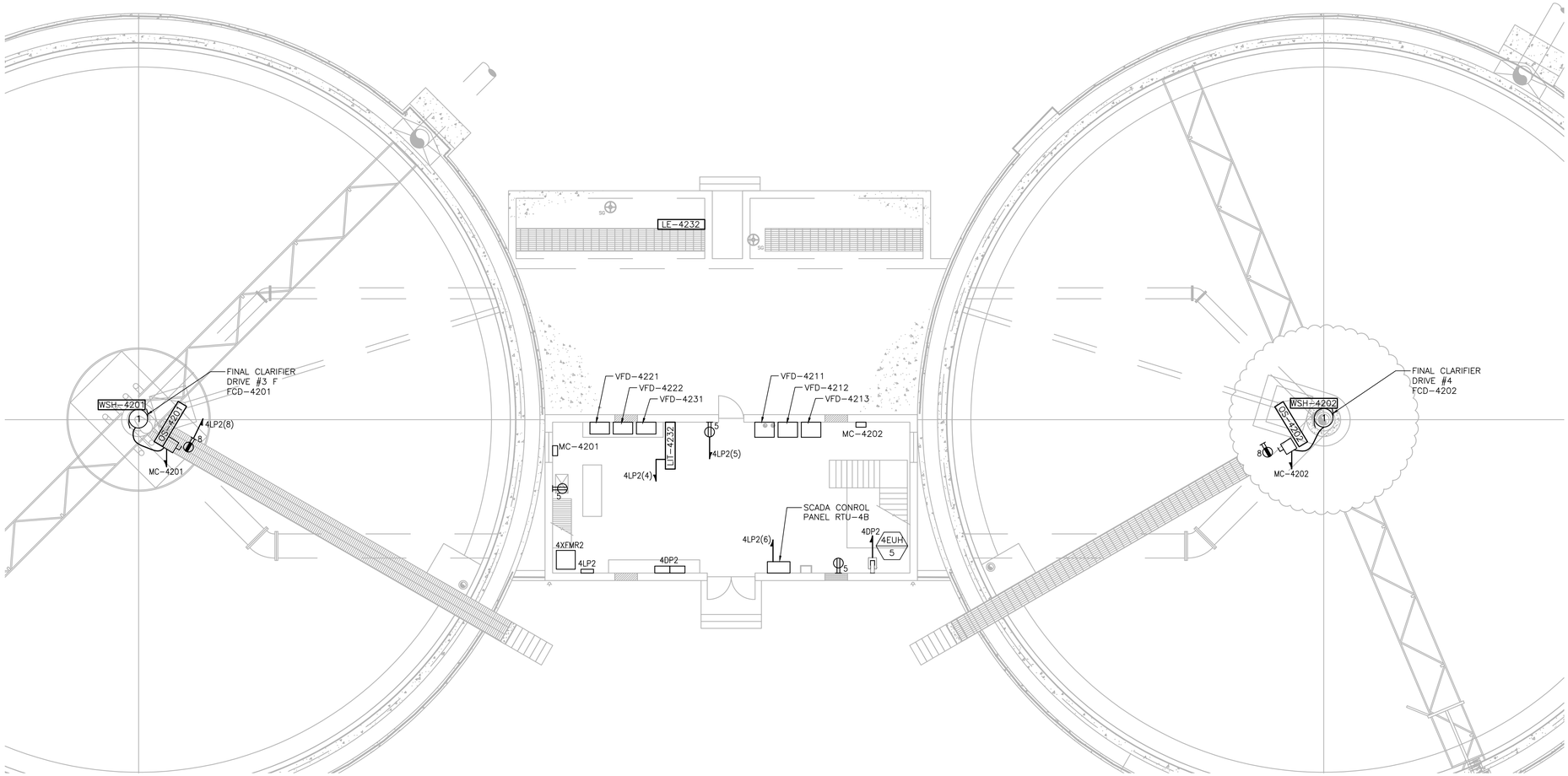

UPPER LEVEL PLAN

SCALE: 1/8"= 1'-0"

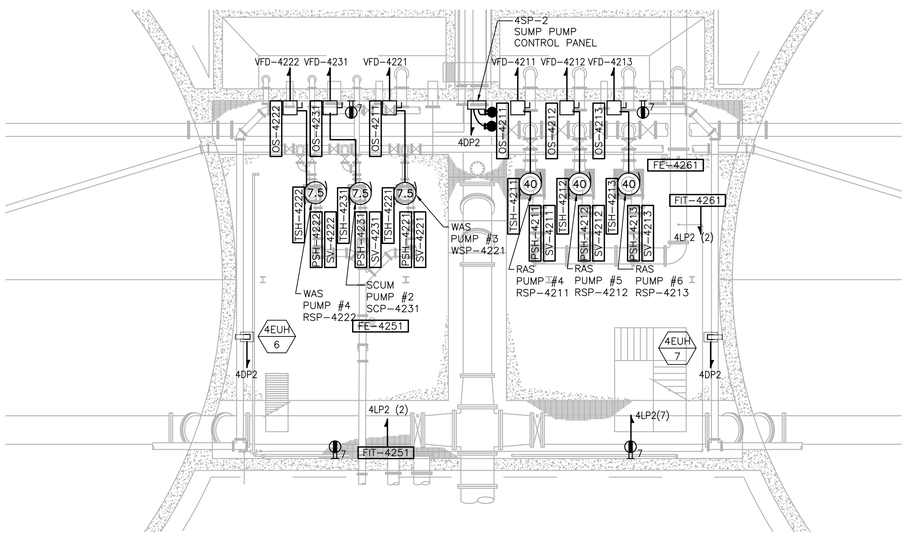

LOWER LEVEL PLAN

SCALE: 1/8"= 1'-0"

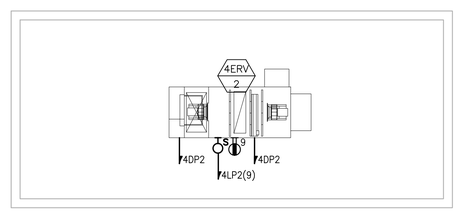

ROOF PLAN

SCALE: 1/8"= 1'-0"

PREPARED BY

BETA
www.BETA-Inc.com

REGISTERED PROFESSIONAL

COMMONWEALTH OF MASSACHUSETTS
MICHAEL J. COTTER
ELECTRICAL
No. 40599
REGISTERED PROFESSIONAL ENGINEER

SUBCONSULTANT

SAR ENGINEERING, INC.
Mechanical/Electrical Engineers
150 Grossman Drive, Suite 309
Braintree, Massachusetts 02184
617 328-9215
web: www.sar.com

PROJECT

Taunton Wastewater Treatment Facility Improvements Phase 2

Taunton, MA

TITLE

Electrical Final Clarifiers No. 3 & 4 Plan & Sludge Pump Station No.2 Power Plan

NO.	REVISIONS	DATE

DRAWN BY:	RLB
DESIGNED BY:	MC
CHECKED BY:	MC
ISSUE DATE:	03/31/22
BETA JOB NO.:	6050

SCALE

NONE

UNLESS OTHERWISE NOTED OR CHANGED BY REPRODUCTION

SHEET NO.

E-4.6

3/30/2022 3:23 PM W:\YEAR - 2018\18009.00 - TAUNTON WWTF UPGRADES\ELECTRICAL DEPARTMENT\PHASE 2\18009.00 ELEC FINAL CLARIFIERS & SECONDARY SLUDGE PS - PHASE 2.DWG (BETA STB BW.STB)

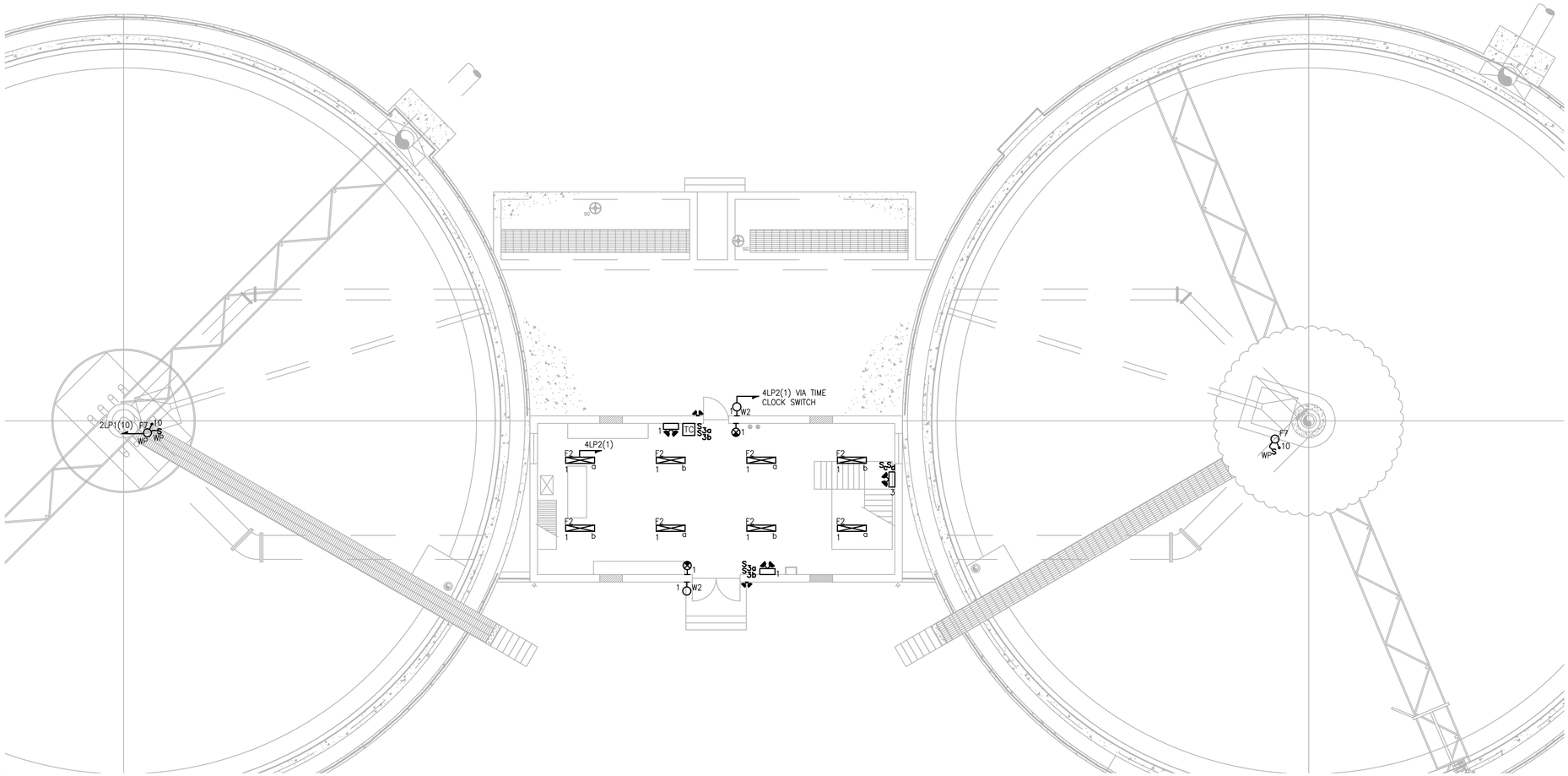

UPPER LEVEL PLAN

SCALE: 1/8"= 1'-0"

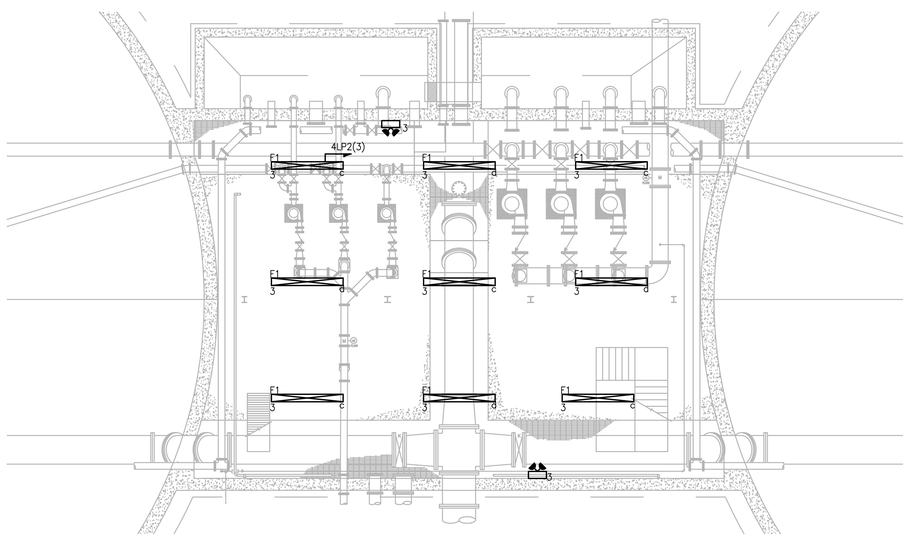

LOWER LEVEL PLAN

SCALE: 1/8"= 1'-0"

PREPARED BY

BETA
www.BETA-Inc.com

REGISTERED PROFESSIONAL

COMMONWEALTH OF MASSACHUSETTS
MICHAEL J. COTTER
ELECTRICAL
No. 40999
REGISTERED PROFESSIONAL ENGINEER

SUBCONSULTANT

SAR ENGINEERING, INC.

Mechanical/Electrical Engineers
150 Grossman Drive, Suite 309
Braintree, Massachusetts 02184
617 328-9215
web: www.sar.com

PROJECT

Taunton Wastewater Treatment Facility Improvements Phase 2

Taunton, MA

TITLE

Electrical Final Clarifiers No. 3 & 4 Plan & Sludge Pump Station No.2 Lighting Plan

NO.	REVISIONS	DATE

DRAWN BY:	RLB
DESIGNED BY:	MC
CHECKED BY:	MC
ISSUE DATE:	03/31/22
BETA JOB NO.:	6050

SCALE

NONE

UNLESS OTHERWISE NOTED OR CHANGED BY REPRODUCTION

SHEET NO.

E-4.7

3/29/2022 1:57 PM W:\YEAR - 2018\18009.00 - TAUNTON WWTF UPGRADES\ELECTRICAL DEPARTMENT\PHASE 2\18009.00 ELEC FINAL CLARIFIERS & SECONDARY SLUDGE PS - PHASE 2.DWG (BETA STB BW.STB)

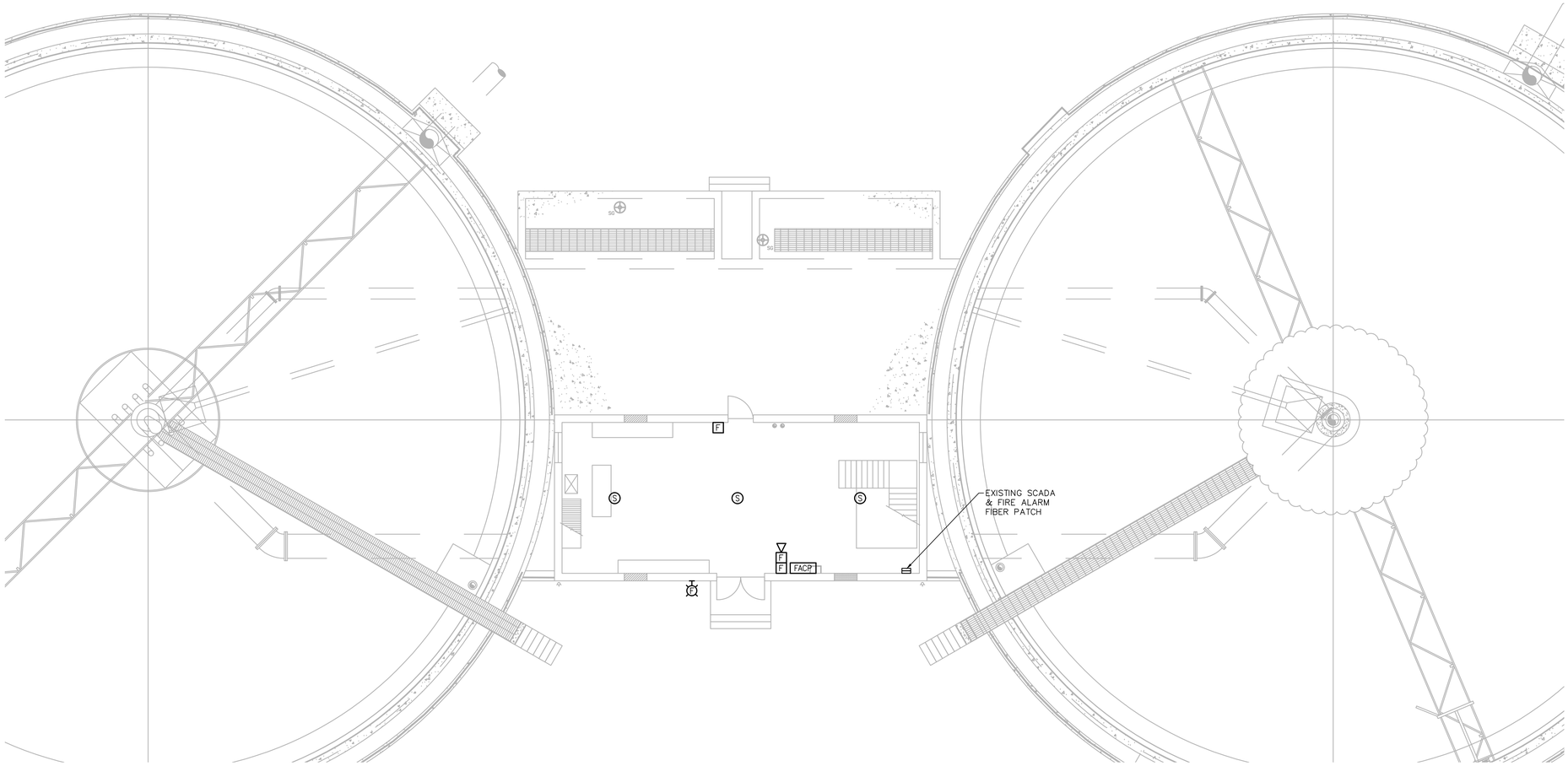

UPPER LEVEL PLAN

SCALE: 1/8"= 1'-0"

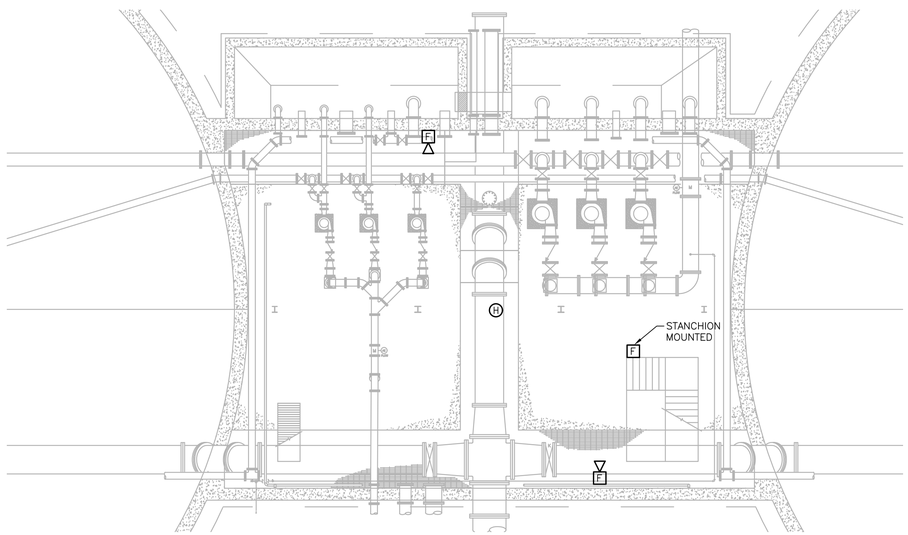

LOWER LEVEL PLAN

SCALE: 1/8"= 1'-0"

PREPARED BY

BETA
www.BETA-Inc.com

REGISTERED PROFESSIONAL

COMMONWEALTH OF MASSACHUSETTS
MICHAEL J. COTTER
ELECTRICAL
No. 40999
REGISTERED PROFESSIONAL ENGINEER

SUBCONSULTANT

SAR ENGINEERING, INC.

Mechanical/Electrical Engineers
150 Grossman Drive, Suite 309
Braintree, Massachusetts 02184
617 328-9215
web: www.sar.com

PROJECT

Taunton Wastewater Treatment Facility Improvements Phase 2

Taunton, MA

TITLE

Electrical Final Clarifiers No. 3 & 4 Plan & Sludge Pump Station No.2 Fire Alarm Plan

NO.	REVISIONS	DATE

DRAWN BY:	RLB
DESIGNED BY:	MC
CHECKED BY:	MC
ISSUE DATE:	03/31/22
BETA JOB NO.:	6050

SCALE

NONE

UNLESS OTHERWISE NOTED OR CHANGED BY REPRODUCTION

SHEET NO.

E-4.8

3/29/2022 1:57 PM W:\YEAR - 2018\18009.00 - TAUNTON WWTF UPGRADES\ELECTRICAL DEPARTMENT\PHASE 2\18009.00 ELEC FINAL CLARIFIERS & SECONDARY SLUDGE PS - PHASE 2.DWG (BETA STB BW.STB)

NOTES:

1. PROVIDE SEPARATE PULL BOXES ON THE SIDE OF TANK FOR POWER WIRING, SIGNAL WIRING, AND CONTROL WIRING FOR INTERFACE TO DUCTBANK.

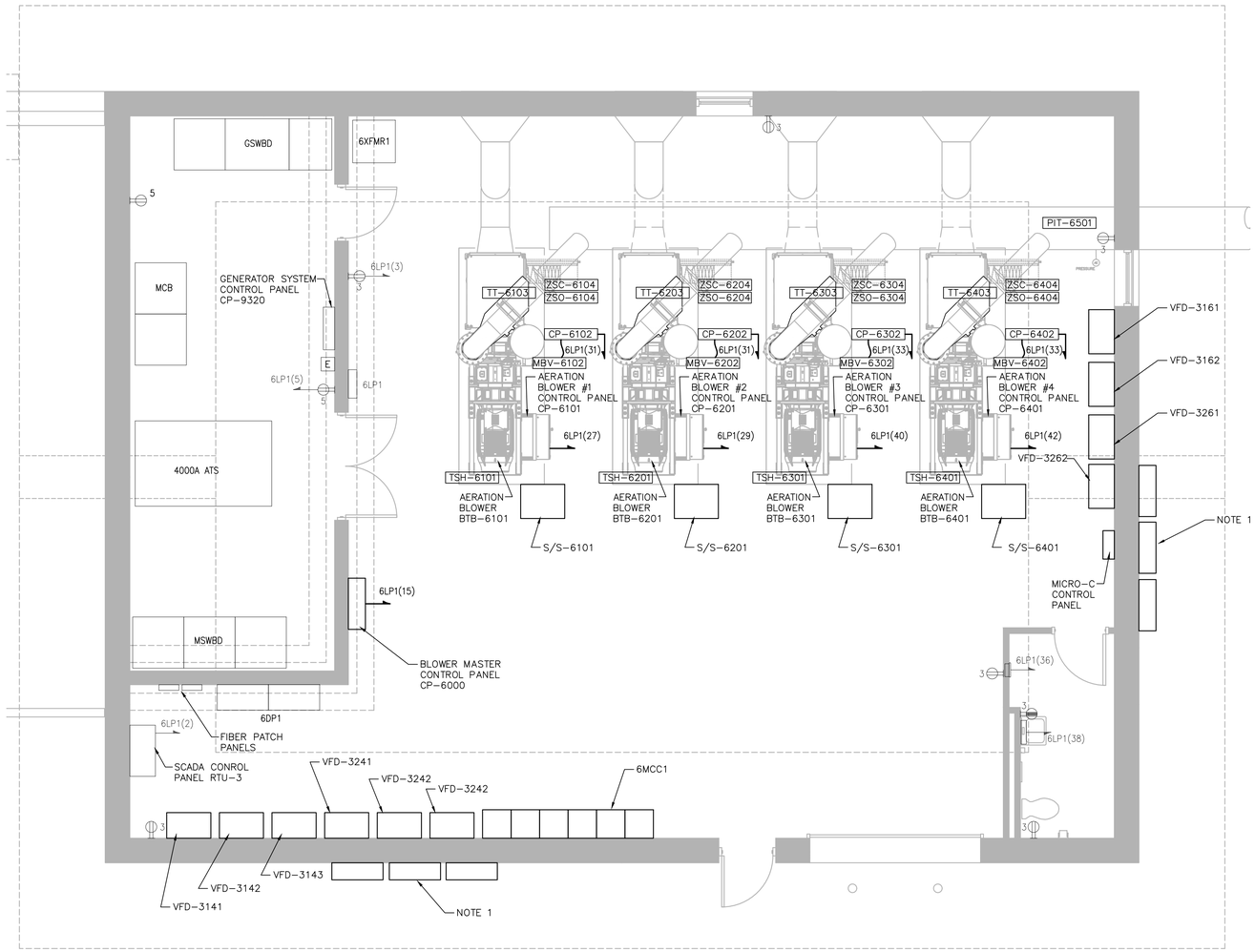

PLAN

SCALE: 1/4"= 1'-0"

PREPARED BY

BETA
www.BETA-Inc.com

REGISTERED PROFESSIONAL

COMMONWEALTH OF MASSACHUSETTS
MICHAEL J. COTTER
ELECTRICAL
No. 40599
REGISTERED PROFESSIONAL ENGINEER

SUBCONSULTANT

SAR ENGINEERING, INC.
Mechanical/Electrical Engineers
150 Grossman Drive, Suite 309
Braintree, Massachusetts 02184
617 328-9215
web: www.sar.com

PROJECT

Taunton Wastewater Treatment Facility Improvements Phase 2

Taunton, MA

TITLE

Electrical Blower Building Power Plan

NO.	REVISIONS	DATE

DRAWN BY:	RLB
DESIGNED BY:	MC
CHECKED BY:	MC
ISSUE DATE:	03/31/22
BETA JOB NO.:	6050

SCALE

AS SHOWN

UNLESS OTHERWISE NOTED OR CHANGED BY REPRODUCTION

SHEET NO.

E-6.1

3/30/2022 3:26 PM W:\YEAR - 2018\18009.00 - TAUNTON WWTF UPGRADES\ELECTRICAL DEPARTMENT\PHASE 2\18009.00 ELEC NEW BLOWER BUILDING-PHASE 2.DWG (BETA STB BW.STB)

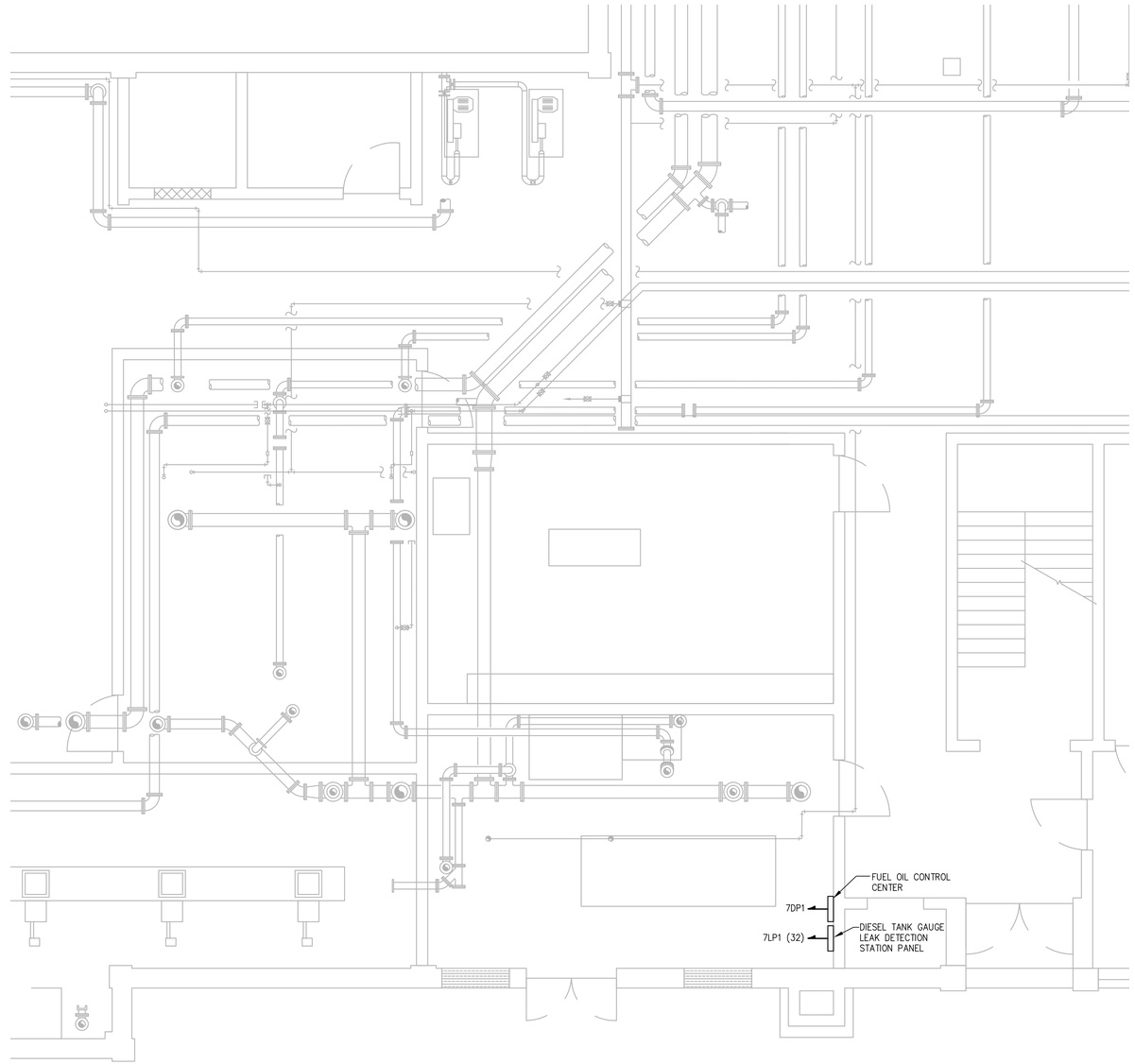

FIRST FLOOR PART PLAN

SCALE: 1/4"= 1'-0"

PREPARED BY

BETA
www.BETA-Inc.com

REGISTERED PROFESSIONAL

COMMONWEALTH OF MASSACHUSETTS
MICHAEL J. COTTER
ELECTRICAL
No. 40599
REGISTERED PROFESSIONAL ENGINEER

SUBCONSULTANT

SAR ENGINEERING, INC.
Mechanical/Electrical Engineers
150 Grossman Drive, Suite 309
Braintree, Massachusetts 02184
617 328-9215
web: www.sar.com

PROJECT

Taunton Wastewater Treatment Facility Improvements Phase 2

Taunton, MA

TITLE

Electrical
Solids Handling
Building
First Floor
Part Plan

NO.	REVISIONS	DATE

DRAWN BY:	RLB
DESIGNED BY:	MC
CHECKED BY:	MC
ISSUE DATE:	03/31/22
BETA JOB NO.:	6050

SCALE

AS SHOWN

UNLESS OTHERWISE NOTED OR CHANGED BY REPRODUCTION

SHEET NO.

E-7.1

3/29/2022 2:03 PM W:\YEAR - 2018\18009.00 - TAUNTON WWTF UPGRADES\ELECTRICAL DEPARTMENT\PHASE 2\18009.00 ELEC SOLIDS HANDLING BUILDING-PHASE 2.DWG (BETA STB BW.STB)

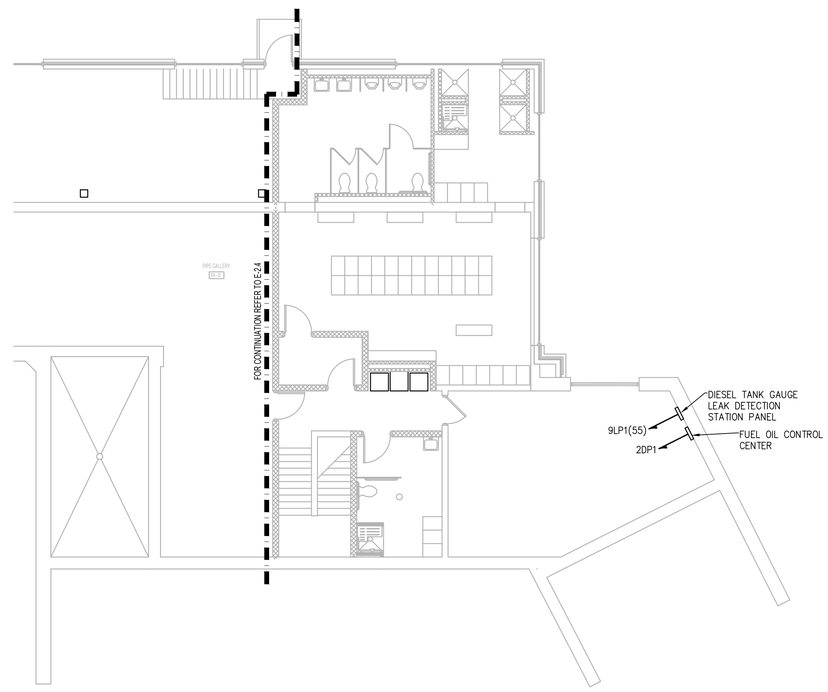

BASEMENT FLOOR - PLAN

SCALE: 1/8"= 1'-0"

PREPARED BY

BETA
www.BETA-Inc.com

REGISTERED PROFESSIONAL

COMMONWEALTH OF MASSACHUSETTS
MICHAEL J. COTTER
ELECTRICAL
No. 40599
REGISTERED PROFESSIONAL ENGINEER

SUBCONSULTANT

SAR ENGINEERING, INC.

Mechanical/Electrical Engineers
150 Grossman Drive, Suite 309
Braintree, Massachusetts 02184
617 328-9215
web: www.sar.com

PROJECT

Taunton Wastewater Treatment Facility Improvements Phase 2

Taunton, MA

TITLE

Electrical Control & Admin. Building Basement Power Plan

NO.	REVISIONS	DATE

DRAWN BY:	RLB
DESIGNED BY:	MC
CHECKED BY:	MC
ISSUE DATE:	03/31/22
BETA JOB NO.:	6050

SCALE

AS SHOWN

UNLESS OTHERWISE NOTED OR CHANGED BY REPRODUCTION

SHEET NO.

E-9.1

3/29/2022 1:46 PM W:\YEAR - 2018\18009.00 - TAUNTON WWTF UPGRADES\ELECTRICAL DEPARTMENT\PHASE 2\18009.00 ELEC CONTROL-ADMIN BUILDING-PHASE 2.DWG (BETA STB BW.STB)

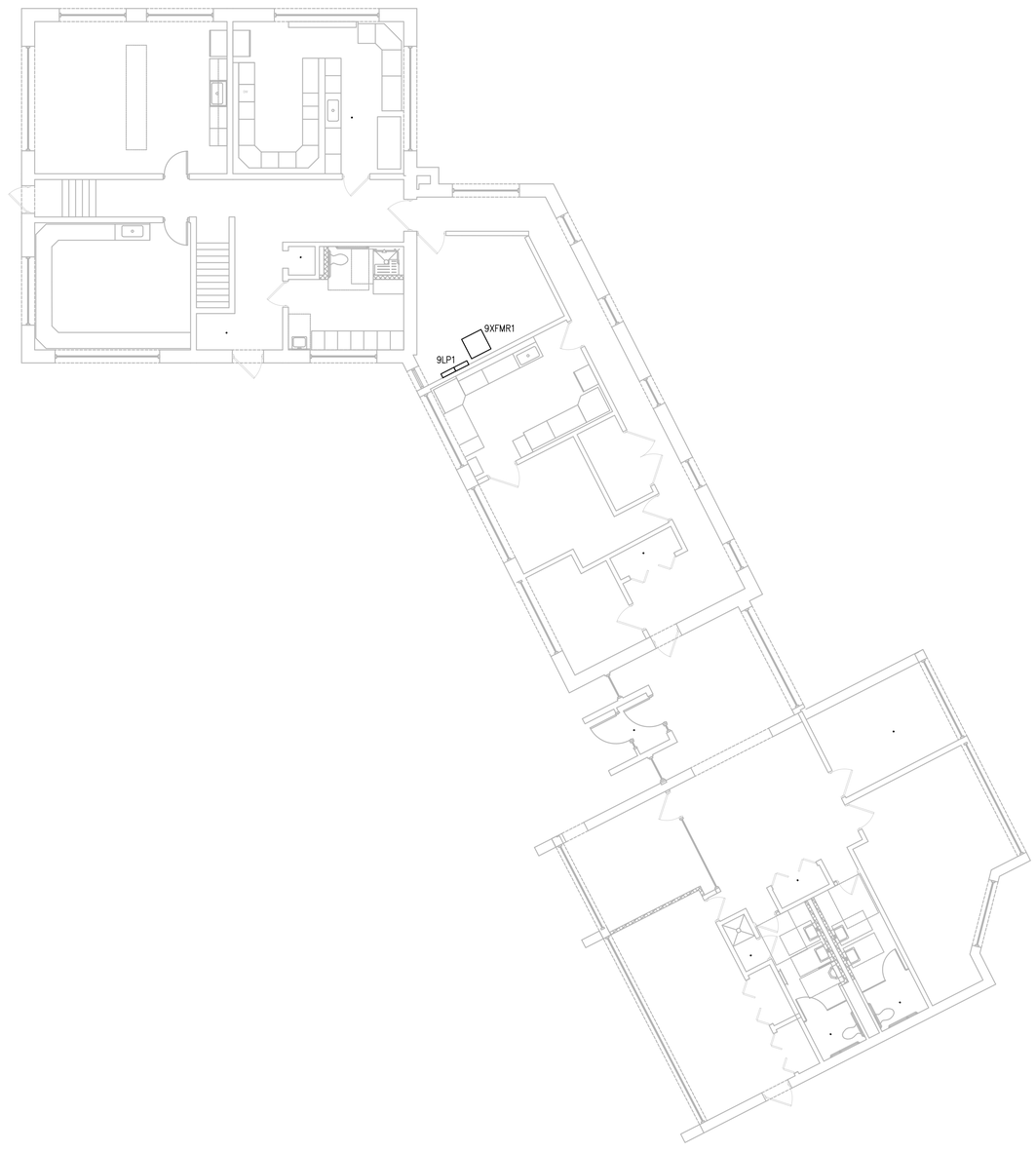

FIRST FLOOR - PLAN

SCALE: 1/8"= 1'-0"

PREPARED BY

BETA
www.BETA-Inc.com

REGISTERED PROFESSIONAL

COMMONWEALTH OF MASSACHUSETTS
MICHAEL J. COTTER
ELECTRICAL
No. 40999
REGISTERED PROFESSIONAL ENGINEER

SUBCONSULTANT

SAR ENGINEERING, INC.

Mechanical/Electrical Engineers
150 Grossman Drive, Suite 309
Braintree, Massachusetts 02184
617 328-9215
web: www.sar.com

PROJECT

Taunton Wastewater Treatment Facility Improvements Phase 2

Taunton, MA

TITLE

Electrical Control & Admin. Building First Floor Power Plan

NO.	REVISIONS	DATE

DRAWN BY:	RLB
DESIGNED BY:	MC
CHECKED BY:	MC
ISSUE DATE:	03/31/22
BETA JOB NO.:	6050

SCALE

AS SHOWN

UNLESS OTHERWISE NOTED OR CHANGED BY REPRODUCTION

SHEET NO.

E-9.2

3/29/2022 1:46 PM W:\YEAR - 2018\18009.00 - TAUNTON WWTF UPGRADES\ELECTRICAL DEPARTMENT\PHASE 2\18009.00 ELEC CONTROL-ADMIN BUILDING-PHASE 2.DWG (BETA STB BW.STB)

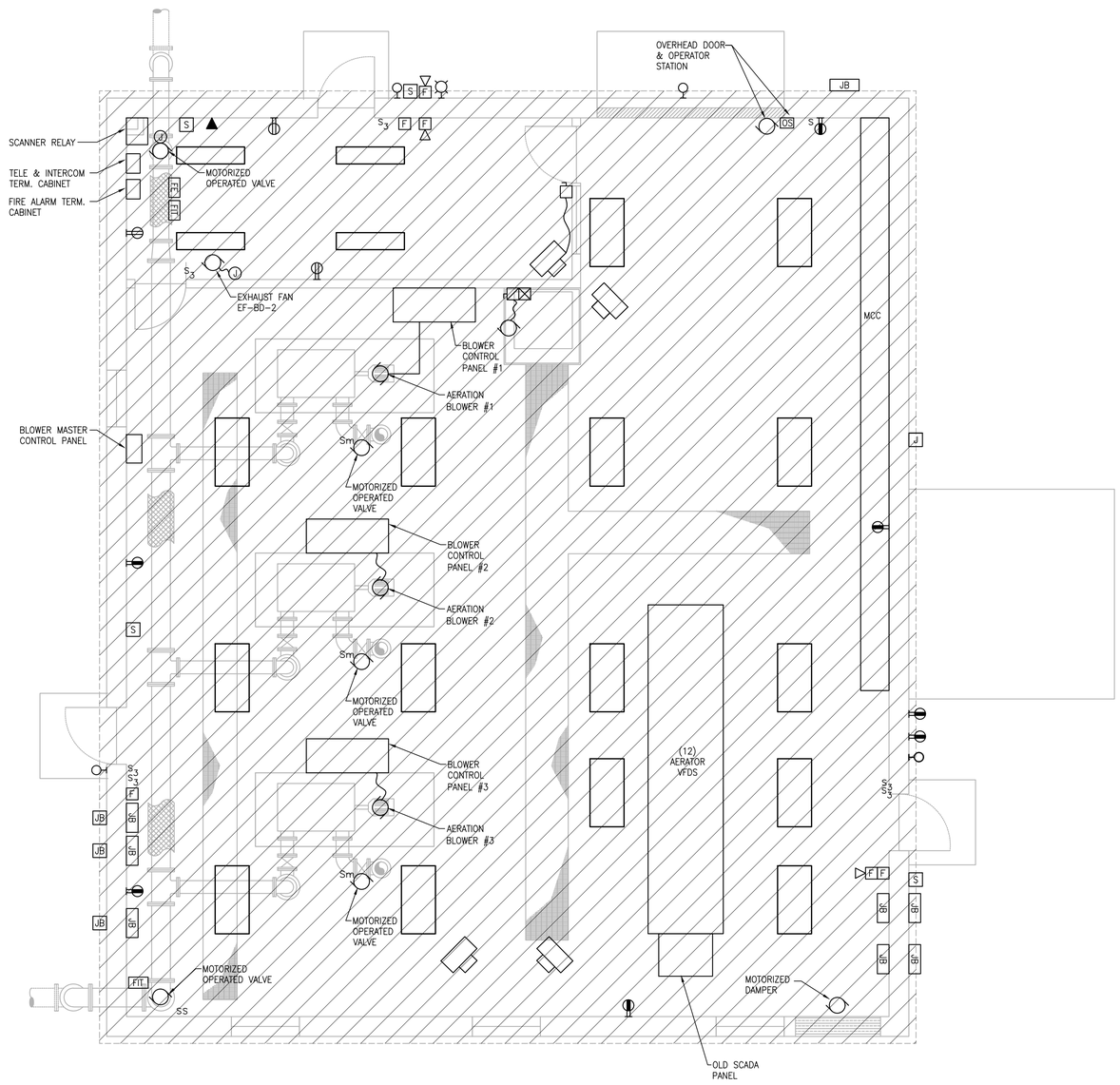

PLAN

SCALE: 1/4"= 1'-0"

PREPARED BY

BETA
www.BETA-Inc.com

REGISTERED PROFESSIONAL

COMMONWEALTH OF MASSACHUSETTS
MICHAEL J. COTTER
ELECTRICAL
No. 40599
REGISTERED PROFESSIONAL ENGINEER

SUBCONSULTANT

SAR ENGINEERING, INC.
Mechanical/Electrical Engineers
150 Grossman Drive, Suite 309
Braintree, Massachusetts 02184
617 328-9215
web: www.sar.com

PROJECT

Taunton Wastewater Treatment Facility Improvements Phase 2

Taunton, MA

TITLE

Electrical Demolition Existing Blower Building Plan

NO.	REVISIONS	DATE

DRAWN BY:	RLB
DESIGNED BY:	MC
CHECKED BY:	MC
ISSUE DATE:	03/31/22
BETA JOB NO.:	6050

SCALE

AS SHOWN

UNLESS OTHERWISE NOTED OR CHANGED BY REPRODUCTION

SHEET NO.

E-9.3

3/29/2022 2:06 PM W:\YEAR - 2018\18009.00 - TAUNTON WWTF UPGRADES\ELECTRICAL DEPARTMENT\PHASE 2\18009.00 ELEC OLD BLOWER BUILDING - PHASE 2.DWG (BETA STB BW.STB)

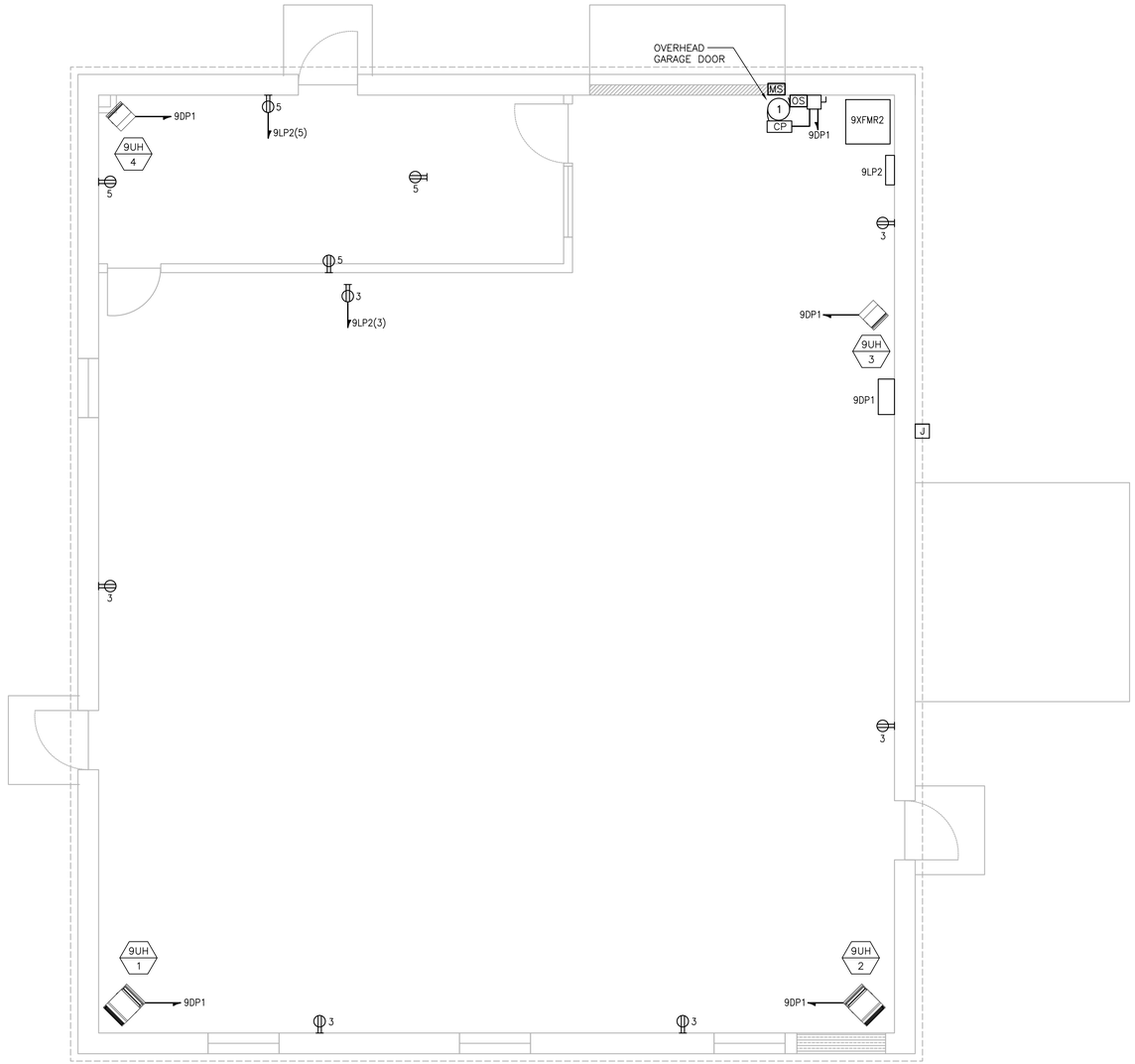

PLAN

SCALE: 1/4"= 1'-0"

PREPARED BY

BETA
www.BETA-Inc.com

REGISTERED PROFESSIONAL

COMMONWEALTH OF MASSACHUSETTS
MICHAEL J. COTTER
ELECTRICAL
No. 40999
REGISTERED PROFESSIONAL ENGINEER

SUBCONSULTANT

SAR ENGINEERING, INC.

Mechanical/Electrical Engineers
150 Grossman Drive, Suite 309
Braintree, Massachusetts 02184
617 328-9215
web: www.sar.com

PROJECT

Taunton Wastewater Treatment Facility Improvements Phase 2

Taunton, MA

TITLE

Electrical
Storage Building
Power Plan

NO.	REVISIONS	DATE

DRAWN BY:	RLB
DESIGNED BY:	MC
CHECKED BY:	MC
ISSUE DATE:	03/31/22
BETA JOB NO.:	6050

SCALE

AS SHOWN

UNLESS OTHERWISE NOTED OR CHANGED BY REPRODUCTION

SHEET NO.

E-9.4

3/30/2022 3:27 PM W:\YEAR - 2018\18009.00 - TAUNTON WWTF UPGRADES\ELECTRICAL DEPARTMENT\PHASE 2\18009.00 ELEC OLD BLOWER BUILDING - PHASE 2.DWG (BETA STB BW.STB)

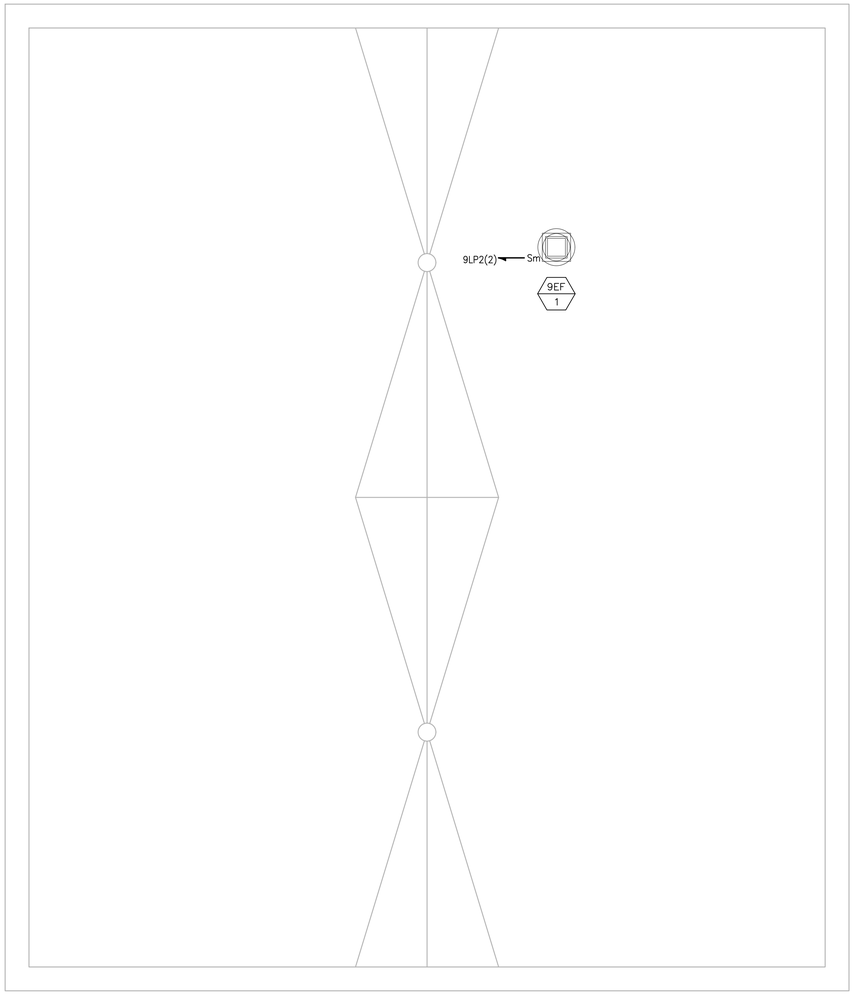

PLAN
SCALE: 1/4"= 1'-0"

PREPARED BY

BETA
www.BETA-Inc.com

REGISTERED PROFESSIONAL

COMMONWEALTH OF MASSACHUSETTS
MICHAEL J. COTTER
ELECTRICAL
No. 40999
REGISTERED PROFESSIONAL ENGINEER

SUBCONSULTANT

SAR ENGINEERING, INC.
Mechanical/Electrical Engineers
150 Grossman Drive, Suite 309
Braintree, Massachusetts 02184
617 328-9215
web: www.sar.com

PROJECT

Taunton Wastewater Treatment Facility Improvements Phase 2

Taunton, MA

TITLE

Electrical
Storage Building
Power Roof Plan

NO.	REVISIONS	DATE

DRAWN BY:	RLB
DESIGNED BY:	MC
CHECKED BY:	MC
ISSUE DATE:	03/31/22
BETA JOB NO.:	6050

SCALE

AS SHOWN

UNLESS OTHERWISE NOTED OR CHANGED BY REPRODUCTION

SHEET NO.

E-9.5

3/29/2022 2:06 PM W:\YEAR - 2018\18009.00 - TAUNTON WWTF UPGRADES\ELECTRICAL DEPARTMENT\PHASE 2\18009.00 ELEC OLD BLOWER BUILDING - PHASE 2.DWG (BETA STB BW.STB)

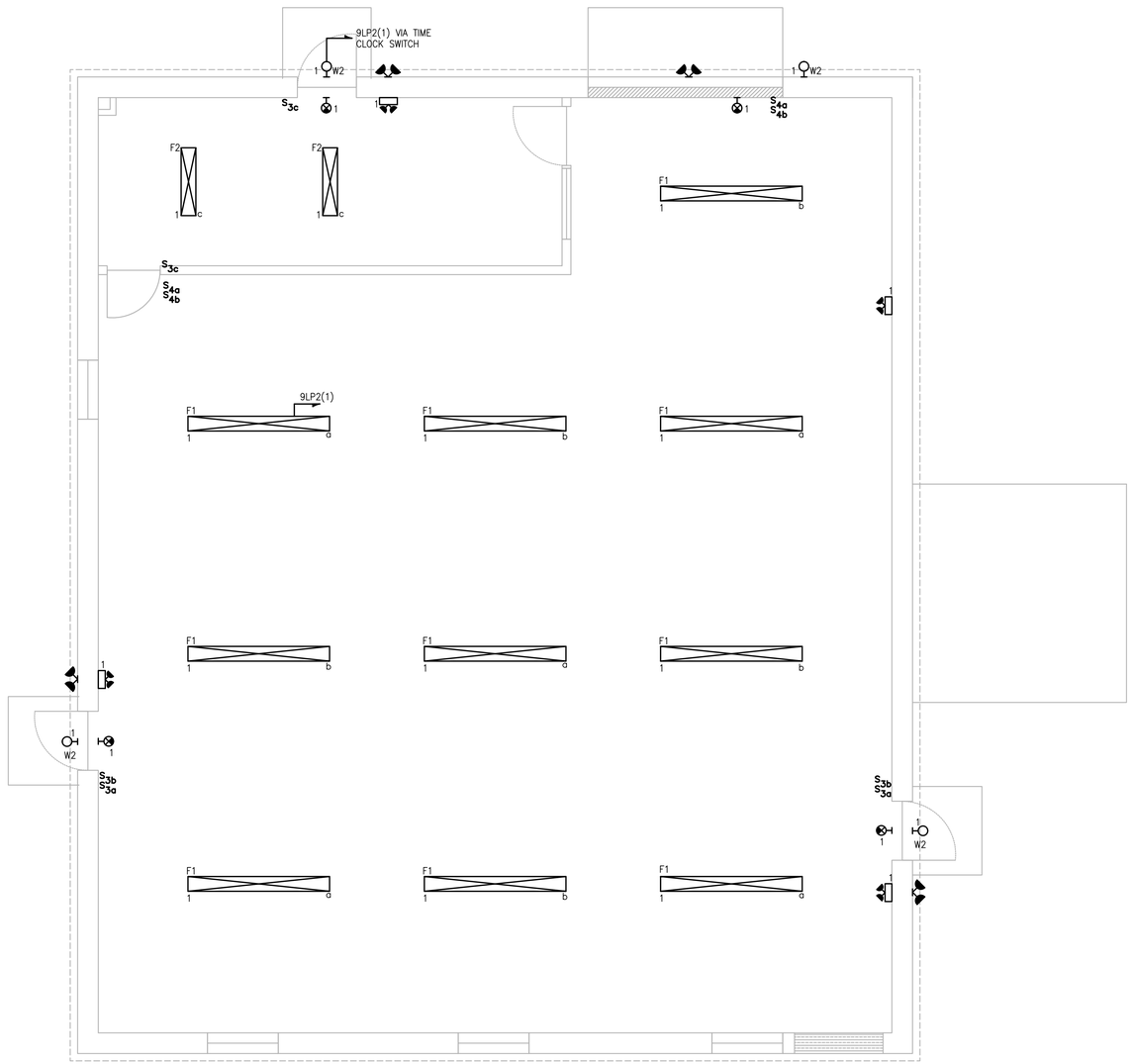

PLAN

SCALE: 1/4"= 1'-0"

PREPARED BY

BETA
www.BETA-Inc.com

REGISTERED PROFESSIONAL

COMMONWEALTH OF MASSACHUSETTS
MICHAEL J. COTTER
ELECTRICAL
No. 40999
REGISTERED PROFESSIONAL ENGINEER

SUBCONSULTANT

SAR ENGINEERING, INC.
Mechanical/Electrical Engineers
150 Grossman Drive, Suite 309
Braintree, Massachusetts 02184
617 328-9215
web: www.sar.com

PROJECT

Taunton Wastewater Treatment Facility Improvements Phase 2

Taunton, MA

TITLE

Electrical Storage Building Lighting Plan

NO.	REVISIONS	DATE

DRAWN BY:	RLB
DESIGNED BY:	MC
CHECKED BY:	MC
ISSUE DATE:	03/31/22
BETA JOB NO.:	6050

SCALE

AS SHOWN

UNLESS OTHERWISE NOTED OR CHANGED BY REPRODUCTION

SHEET NO.

E-9.6

3/30/2022 3:28 PM W:\YEAR - 2018\18009.00 - TAUNTON WWTF UPGRADES\ELECTRICAL DEPARTMENT\PHASE 2\18009.00 ELEC OLD BLOWER BUILDING - PHASE 2.DWG (BETA STB BW.STB)

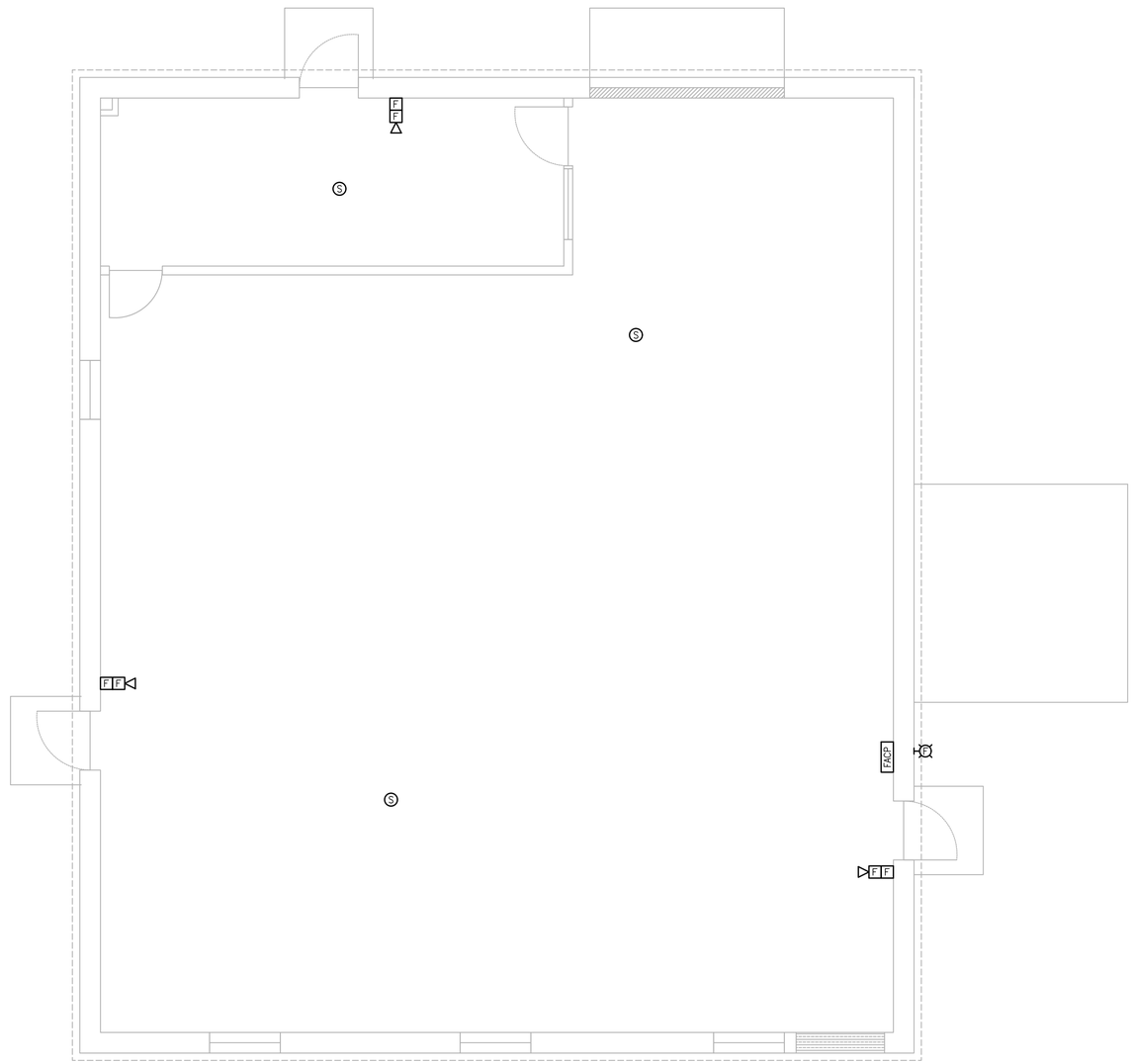

PLAN
SCALE: 1/4"= 1'-0"

PREPARED BY

BETA
www.BETA-Inc.com

REGISTERED PROFESSIONAL

COMMONWEALTH OF MASSACHUSETTS
MICHAEL J. COTTER
ELECTRICAL
No. 40599
REGISTERED PROFESSIONAL ENGINEER

SUBCONSULTANT

SAR ENGINEERING, INC.
Mechanical/Electrical Engineers
150 Grossman Drive, Suite 309
Braintree, Massachusetts 02184
617 328-9215
web: www.sar.com

PROJECT

Taunton Wastewater Treatment Facility Improvements Phase 2

Taunton, MA

TITLE

Electrical
Storage Building
Fire Alarm Plan

NO.	REVISIONS	DATE

DRAWN BY:	RLB
DESIGNED BY:	MC
CHECKED BY:	MC
ISSUE DATE:	03/31/22
BETA JOB NO.:	6050

SCALE

AS SHOWN

UNLESS OTHERWISE NOTED OR CHANGED BY REPRODUCTION

SHEET NO.

E-9.7

3/30/2022 3:28 PM W:\YEAR - 2018\18009.00 - TAUNTON WWTF UPGRADES\ELECTRICAL DEPARTMENT\PHASE 2\18009.00 ELEC OLD BLOWER BUILDING - PHASE 2.DWG (BETA STB BW.STB)