City of Taunton, Massachusetts

Wastewater Treatment Facility Improvements
Solids Handling
75% Design Drawings

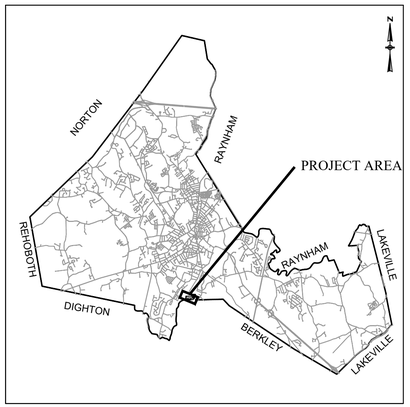

LOCATION MAP
NOT TO SCALE

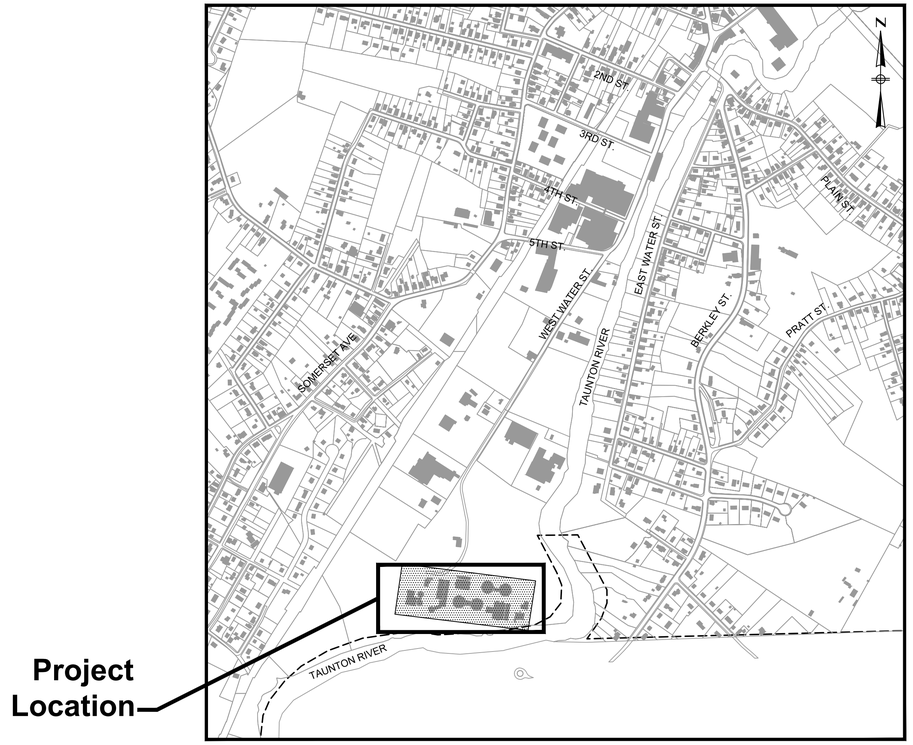

LOCUS MAP
NOT TO SCALE

Mayor
Shaunna O'Connell

Department of Public Works
Frederic J. Cornaglia - Commissioner
Anthony Abreau - Assistant Commissioner

City Engineer
Michael Patneaude, P.E.

City Council
Estele Borges
Deborah Carr
Donald Cleary
Gerald Croteau
John M. McCaul
Jeff Postell
David W. Pottier
Jeanne Quinn
Barry Sanders

PROGRESS DRAWINGS
NOT FOR CONSTRUCTION

Contract ---
CWSRF No. ---

Issue Date:
May, 2020

Prepared By:
BETA
www.BETA-Inc.com

INDEX OF DRAWINGS

GENERAL

G-1.1 – SHEET INDEX

G-1.2 – LEGEND, ABBREVIATIONS & PLAN SYMBOLS

G-1.3 – GENERAL NOTES

G-1.4 – WWTF PROCESS AREAS KEY PLAN

G-2.9 – PROCESS FLOW DIAGRAM SOLIDS HANDLING

CIVIL

C-1.1 – WWTF EXISTING SITE PLAN

STRUCTURAL

S-7.1 – SLUDGE HANDLING DETAILS

S-7.2 – SLUDGE HANDLING LINTEL BEARING DETAILS

MECHANICAL

M-7.1 – GRAVITY THICKENING TANKS DEMOLITION PLANS & SECTION

M-7.2 – SOLIDS HANDLING BUILDING DEMOLITION PLANS & SECTIONS

M-7.3 – SOLIDS HANDLING BUILDING FIRST FLOOR DEMOLITION PLAN

M-7.4 – SOLIDS HANDLING BUILDING SECOND FLOOR DEMOLITION PLAN

M-7.5 – GRAVITY THICKENING TANKS PLANS & SECTIONS

M-7.6 – SOLIDS HANDLING BUILDING PLANS & SECTIONS

M-7.7 – SOLIDS HANDLING BUILDING FIRST FLOOR PLAN

M-7.8 – SOLIDS HANDLING BUILDING SECOND FLOOR PLAN

MD-1 – MECHANICAL DETAILS I

MD-2 – MECHANICAL DETAILS II

MD-3 – MECHANICAL DETAILS III

HVAC

H-0.1 – HVAC LEGEND AND GENERAL NOTES

H-0.2 – HVAC SCHEDULES

H-0.3 – HVAC SCHEDULES

H-0.4 – HVAC DETAILS

H-0.5 – HVAC DETAILS

H-7.1 – HVAC GRAVITY THICKENING TANKS DEMOLITION PLANS

H-7.2 – HVAC EXISTING CONDITIONS SOLIDS HANDLING BUILDING FIRST FLOOR PLAN

H-7.3 – HVAC EXISTING CONDITIONS SOLIDS HANDLING BUILDING SECOND FLOOR PLAN

H-7.4 – HVAC GRAVITY THICKENING TANKS NEW WORK PLANS

H-7.5 – HVAC NEW WORK SOLIDS HANDLING BUILDING FIRST FLOOR PLAN

H-7.6 – HVAC NEW WORK SOLIDS HANDLING BUILDING SECOND FLOOR PLAN

H-7.7 – HVAC SOLIDS HANDLING BUILDING AIR FLOW DIAGRAM

H-7.8 – HVAC SOLIDS HANDLING BUILDING BOILER ROOM PART PLAN

PLUMBING

P-0.1 – PLUMBING LEGEND AND GENERAL NOTES

P-0.2 – PLUMBING SCHEDULES

P-0.3 – PLUMBING DETAILS

P-0.4 – PLUMBING DETAILS

P-7.1 – PLUMBING SOLIDS HANDLING BUILDING FIRST FLOOR DEMOLITION PLAN

P-7.2 – PLUMBING SOLIDS HANDLING BUILDING SECOND FLOOR DEMOLITION PLAN

P-7.3 – PLUMBING SOLIDS HANDLING BUILDING FIRST FLOOR NEW WORK PLAN

P-7.4 – PLUMBING SOLIDS HANDLING BUILDING SECOND FLOOR NEW WORK PLAN

ELECTRICAL

E-1 – ELECTRICAL LEGEND AND NOTES

E-0.2 – ELECTRICAL ONE LINE DIAGRAM DEMOLITION

E-0.3 – ELECTRICAL ONE LINE DIAGRAM NEW WORK

E-0.4 – ELECTRICAL SCHEDULES

E-0.5 – ELECTRICAL WIRING DIAGRAMS

E-0.6 – ELECTRICAL WIRING DIAGRAMS

E-0.7 – ELECTRICAL MOTOR CONTROL WIRING DIAGRAMS

E-0.8 – ELECTRICAL DETAILS

E-7.1 – ELECTRICAL GRAVITY THICKENING TANKS DEMOLITION PLANS DEMOLITION PLAN

E-7.2 – ELECTRICAL SOLIDS HANDLING BUILDING FIRST FLOOR DEMOLITION PLAN

E-7.3 – ELECTRICAL SOLIDS HANDLING BUILDING SECOND FLOOR DEMOLITION PLAN

E-7.4 – ELECTRICAL GRAVITY THICKENING TANKS NEW WORK POWER PLANS

E-7.5 – ELECTRICAL SOLIDS HANDLING BUILDING FIRST FLOOR NEW WORK POWER PLAN

E-7.6 – ELECTRICAL SOLIDS HANDLING BUILDING SECOND FLOOR NEW WORK POWER PLAN

E-7.10 – ELECTRICAL GRAVITY THICKENING TANKS NEW WORK LIGHTING PLANS

E-7.8 – ELECTRICAL SOLIDS HANDLING BUILDING FIRST FLOOR NEW WORK LIGHTING PLAN

E-7.9 – ELECTRICAL SOLIDS HANDLING BUILDING SECOND FLOOR NEW WORK LIGHTING PLAN

E-7.10 – ELECTRICAL GRAVITY THICKENING TANKS NEW WORK FIRE ALARM PLANS

E-7.11 – ELECTRICAL SOLIDS HANDLING BUILDING FIRST FLOOR NEW WORK FIRE ALARM PLAN

E-7.12 – ELECTRICAL SOLIDS HANDLING BUILDING SECOND FLOOR NEW WORK FIRE ALARM PLAN

PREPARED BY

BETA

www.BETA-Inc.com

REGISTERED PROFESSIONAL

SUBCONSULTANT

PROJECT

Taunton Wastewater Treatment Facility Improvements

Taunton, MA

TITLE

Sheet Index

NO.	REVISIONS	DATE

DRAWN BY:	BM
DESIGNED BY:	BM
CHECKED BY:	--
ISSUE DATE:	5/15/2020
BETA JOB NO.:	6050

SCALE

NONE

UNLESS OTHERWISE NOTED OR CHANGED BY REPRODUCTION

Not for Construction

SHEET NO.

G-1.1

5/19/2020 10:45 AM J:\TAUNTON\WWTF DESIGN\AUTOCAD\PLAN SET\SOLIDS HANDLING\DRAWING INDEX, LEGEND & GENERAL NOTES.DWG (BETA STD BW.CTB)

LEGEND

GENERAL SYMBOLS

EXISTING	PROPOSED	
		CURB OR BERM (TYPE AS NOTED)
EOP	EOP	EDGE OF PAVEMENT
CB	CB	CATCH BASIN (OR GUTTER INLET, LEACHING BASIN, DROP INLET, CATCH BASIN CURB INLET)
EHH	EHH	ELECTRIC HANDHOLE (NUMBER AS NOTED)
E	EMH	ELECTRIC MANHOLE
T	TMH	TELEPHONE MANHOLE
W	WMH	WATER MANHOLE
S	SMH	SEWER MANHOLE
D	DMH	DRAINAGE MANHOLE
GG	GG	GAS GATE
WG	WG	WATER GATE
CS	CS	CURB STOP
HYD.	HYD	HYDRANT
FA	FAB	FIRE ALARM BOX
LP		STREET LIGHT POLE
UP	UP	UTILITY POLE
UPL	UPL	UTILITY POLE w/ LIGHT
		SIGN
GUY	GUY	GUY POLE
12" RCP D	10'-12" RCP	DRAIN PIPE (SIZE AS NOTED)
8" VC S	10'-8" PVC	SEWER MAIN (SIZE AS NOTED)
E	10'-8" PVC	ELECTRIC DUCT
4" HP G	10'-4" HP	GAS MAIN (SIZE AS NOTED)
8" CI W	10'-8" DI	WATER MAIN (SIZE AS NOTED)
T	10'-8" PVC	TELEPHONE DUCT (SIZE AS NOTED)
EOH	OHW	OVERHEAD WIRE
		WOOD GUARD RAIL STEEL BEAM GUARD, WOOD OR STEEL POSTS (TYPE AS NOTED)
		STEEL GUARD RAIL, STEEL POSTS (TYPE NOTED)
		STONE WALL
		RETAINING WALL (TYPE NOTED)
℄		PROPERTY LINE
	2+00	EASEMENT LINE (TYPE NOTED)
N00°00'00"E 000.00'		CONSTRUCTION BASELINE
		SURVEY LINE
		WHEELCHAIR RAMP
		HEDGE/SHRUBS
X X X	X X X	FENCE (SIZE AND TYPE AS NOTED)
WF-1		EDGE OF WETLAND W/ FLAGGED NUMBER
		EDGE OF RIVER/STREAM LINE
		100-FT. WETLAND BUFFER LIMIT
		100-FT. RIVER FRONT LIMIT
		200-FT. RIVER FRONT LIMIT
		WOODED AREA / LIMIT OF CLEARING
x 00.0	x 00.00	SPOT GRADE
		SAW CUT LINE
	TP-1	TEST PIT
	B-1	BORING
ECB	ECB	EROSION CONTROL BARRIER/COMPOST FILTER TUBES
5	5	CONTOUR – MAJOR
4	4	CONTOUR – MINOR

ABBREVIATIONS

GENERAL

ABAN.	ABANDON
ADJ.	ADJUST
ALT.	ALTERATION
APPROX.	APPROXIMATE
B	BASELINE
B.B.	BITUMINOUS BERM
B.C.	BITUMINOUS CURB
BD OR BND	BOUND
BLDG	BUILDING
B.O.	BY OTHERS
CC	CONCRETE CURB
CEM	CEMENT
CLF	CHAIN LINK FENCE
CONC	CONCRETE
CONST.	CONSTRUCTION
CONT.	CONTINUOUS
DWY	DRIVEWAY
EOP	EDGE OF PAVEMENT
EL.	ELEVATION
ESMT.	EASEMENT
EXIST.	EXISTING
FDN.	FOUNDATION
GRAN.	GRANITE
GC	GRANITE CURB
HOR.	HORIZONTAL
IP	IRON PIPE
JCT	JUNCTION
LP	LOW POINT
O.C.	ON CENTER
PERM.	PERMANENT
PROP.	PROPOSED
PVMT.	PAVEMENT
R&D	REMOVE AND DISPOSE
R&R	REMOVE AND RESET
R&S	REMOVE AND STOCKPILE
REM.	REMOVE
REMOD.	REMODEL
RET.	RETAIN
RT.	RIGHT
SDWK	SIDEWALK
SHT.	SHEET
STA.	STATION
TEMP.	TEMPORARY
TOW	TOP OF WALL
TYP.	TYPICAL
VAR.	VARIABLE
VERT.	VERTICAL
VGC	VERTICAL GRANITE CURB
WCR	WHEELCHAIR RAMP

UTILITIES

ACCMP	ASPHALT COATED CORRUGATED METAL PIPE
CAP	CORRUGATED ALUMINUM PIPE
CB	CATCH BASIN
CI	CAST IRON PIPE
CMP	CORRUGATED METAL PIPE
CPP	CORRUGATED PLASTIC PIPE
CS	CORRUGATED STEEL PIPE
DI	DUCTILE IRON PIPE
F&C	FRAME AND COVER
F&G	FRAME AND GRATE
FM	FORCE MAIN
GIP	GALVANIZED IRON PIPE
GG	GAS GATE
HDW	HEADWALL
HYD.	HYDRANT
INV.	INVERT ELEVATION
LP	LIGHT POLE
MH	MANHOLE
PVC	POLY-VINYL-CHLORIDE
PWW	PAVED WATER WAY
RCP	REINFORCED CONCRETE PIPE (CLASS III UNLESS NOTED)
SD	SUBDRAIN
SMH	SEWER MANHOLE
TSV&B	TAPPING SLEEVE, VALVE AND BOX
UP	UTILITY POLE
UPL	UTILITY POLE w/ LIGHT
UPT	UTILITY POLE w/ TRANSFORMER
VC	VITRIFIED CLAY
WI	WROUGHT IRON
WG	WATER GATE
WM	WATER METER/WATER MAIN

FLOW STREAM IDENTIFICATION

A	AIR
ALM	ALUM SOLUTION
BTE	BIOLOGICAL TREATMENT TANK EFFLUENT
CLS	CHLORINE SOLUTION
CW	CITY WATER
D	DRAIN
DEW	DEWATERING
DG	DIGESTER GAS
DRP	DRAIN, PROCESS
DRS	DRAIN, STORM
DS	DIGESTER SUPERNATANT
DSG	DIGESTED SLUDGE
FC	FERRIC CHLORIDE
FCE	FINAL CLARIFIER EFFLUENT
FL	FILTRATE
FS	FOAM SPRAY
G	NATURAL GAS
GR	GRIT SLURRY
GTS	GRAVITY THICKENED SLUDGE
IR	INTERNAL RECYCLE (BIOLOGICAL TREATMENT)
ML	MIXED LIQUOR
OF	OVERFLOW
PA	PROCESS AIR
PE	PRIMARY EFFLUENT
PI	PRIMARY INFLUENT
PMR	POLYMER
PP	POTASSIUM PERMANGANATE
PS	PRIMARY SLUDGE
PW	PLANT WATER
RAS	RETURN ACTIVATED SLUDGE
RPS	RAW PRIMARY SLUDGE
RS	RETURN SLUDGE
SAN	SANITARY
SB	SODIUM BISULFITE
SC	SCUM
SCR	SCREENINGS
SEW	RAW SEWAGE
SH	SODIUM HYPOCHLORITE
SHX	SODIUM HYDROXIDE
TSC	THICKENED SCUM
UF	UNDERFLOW
WAS	WASTE ACTIVATED SLUDGE

MECHANICAL EQUIPMENT

BL	BLOWER
BS	BAR SCREEN
CP	CONTROL PANEL
GC	GRIT CLASSIFIER
GP	GRIT PUMP
GSC	GRIT SCREW CONVEYOR
IP	IN-PLANT PUMP
LE	LEVEL ELEMENT
MIX	MIXER
P	PUMP
RSP	RETURN SLUDGE PUMP
SC	SCREENINGS CONVEYOR
SG	SLUICE GATE
SIL	SILENCER
SP	SEPTAGE PUMP
ST	STORAGE TANK
WSP	WASTE SLUDGE PUMP

SYMBOLS

VALVES, GATES & ACTUATORS*

- BALL CHECK VALVE
- BALL VALVE
- BUTTERFLY VALVE
- CHECK VALVE
- DIAPHRAGM VALVE
- END CAP
- GATE VALVE
- GLOBE VALVE
- KNIFE GATE VALVE
- MANUAL OPERATOR
- MOTOR ACTUATOR
- PINCH VALVE
- PLUG VALVE
- SLIDE GATE
- SLUICE GATE
- SOLENOID ACTUATOR
- V-PORT BALL VALVE
- BACK PRESSURE VALVE
- PRESSURE RELIEF VALVE
- PRESSURE VALVE
- REDUCING REGULATOR W/ EXTERNAL PRESSURE TAP
- VACUUM RELIEF VALVE
- HYDRANT

MECHANICAL EQUIPMENT*

- CENTRIFUGAL PUMP
- SUBMERSIBLE PUMP
- METERING PUMP
- PLUNGER PUMP
- SUBMERSIBLE AXIAL FLOW PUMP
- TURBINE PUMP
- DOUBLE DISC PUMP
- CENTRIFUGAL BLOWER
- POSITIVE DISPLACEMENT BLOWER
- MEMBRANE PUMP
- SURFACE AERATOR
- PERISTALTIC PUMP

MISCELLANEOUS*

- SAMPLE PORT
- WEIR FLOW
- MIXER
- CALIBRATION CHAMBER
- PULSATION DAMPENER (PI, PSV, PIPED TO DRAIN)
- SUBMERSIBLE MIXER
- ANALOG ELEMENT WITH DESCRIPTION (AE, XXX)
- STATIC MIXER
- PRESSURE SWITCH (PS)
- HOSE CONNECTION
- DRAIN
- TANK VENT
- FLOW SIGHT TUBE
- STRAINER
- DIFFUSED AERATION
- PRESSURE INDICATOR WITH DIAPHRAGM (PI)
- REDUCING COUPLING
- PRESSURE GAUGE
- FLOAT TYPE LEVEL SENSOR (LC)
- ELECTRONIC STROKE COUNTER
- LIMIT SWITCH (LS)
- LEVEL ELEMENT (LE)
- ROTOMETER
- PROCESS FLOW
- FLOWMETER
- FOAM SPRAY NOZZLE

*NOTE:
ALL EXISTING FLOW STREAMS, VALVES, GATES, ACTUATORS, AND EQUIPMENT SHOWN LIGHT ON DRAWINGS, ALL NEW FLOW STREAMS, VALVES, GATES, ACTUATORS, AND EQUIPMENT SHOWN DARK ON DRAWINGS.

PREPARED BY

BETA
www.BETA-Inc.com

REGISTERED PROFESSIONAL

SUBCONSULTANT

PROJECT

Taunton Wastewater Treatment Facility Improvements

Taunton, MA

TITLE

Legend, Abbreviations & Plan Symbols

NO.	REVISIONS	DATE

DRAWN BY:	BM
DESIGNED BY:	BM
CHECKED BY:	--
ISSUE DATE:	5/15/2020
BETA JOB NO.:	6050

SCALE

NONE

UNLESS OTHERWISE NOTED OR CHANGED BY REPRODUCTION

Not for Construction

SHEET NO.

G-1.2

5/19/2020 10:46 AM J:\TAUNTON\WWTF DESIGN\AUTOCAD\PLAN SET\SOLIDS HANDLING\DRAWING INDEX, LEGEND & GENERAL NOTES.DWG (BETA STD BW.CTB)

GENERAL CIVIL NOTES

1. SURVEY INFORMATION:

   –TOPOGRAPHIC SURVEY COMPLETED BY LIGHTHOUSE LAND SURVEYING LLC IN NOVEMBER, 2018. PROPERTY LINES AND ABUTTING OWNER INFORMATION OBTAINED FROM THE "OFFICE OF GEOGRAPHIC INFORMATION (MASSGIS), COMMONWEALTH OF MASSACHUSETTS, MASSIT". IT IS NOT INTENDED TO REFLECT THAT A TITLE SEARCH WAS PERFORMED.

   – VERTICAL DATUM: TAUNTON CITY BASE
   – HORIZONTAL DATUM: MASSACHUSETTS STATE PLANE – MAINLAND ZONE NAD83

2. THE LOCATION, SIZE, AND MATERIAL OF EXISTING PIPES, DUCTS, CONDUITS AND OTHER UNDERGROUND STRUCTURES AND/OR UTILITIES SHOWN ON THESE PLANS ARE FROM THE BEST SOURCES AVAILABLE AT PRESENT AND ARE NOT WARRANTED TO BE EXACT, NOR IS IT WARRANTED THAT ALL UNDERGROUND PIPES, UTILITIES OR STRUCTURES ARE SHOWN. EXACT LOCATION TO BE DETERMINED BY CONTRACTOR IN FIELD.

3. EXISTING UTILITIES DEPICTED ARE APPROXIMATE ONLY. PRIOR TO CONSTRUCTION, THE CONTRACTOR SHALL VERIFY LOCATIONS OF ALL EXISTING UTILITIES AND NOTIFY ALL UTILITY COMPANIES (PUBLIC AND PRIVATE). IN ADDITION, "DIG SAFE" MUST BE CONTACTED AT 1(800)–322–4844.

4. EXISTING UTILITIES ENCOUNTERED DURING CONSTRUCTION SHALL BE PROTECTED AND SUPPORTED AT ALL TIMES BY THE CONTRACTOR. THE CONTRACTOR SHALL CONDUCT HIS OPERATIONS TO INTERFERE AS LITTLE AS POSSIBLE WITH EXISTING UTILITIES. PAYMENT FOR PROVIDING SAID PROTECTION AND SUPPORTS SHALL BE CONSIDERED A PART OF AND PAID FOR UNDER THE APPROPRIATE ITEMS UNLESS OTHERWISE INDICATED AND/OR DIRECTED BY THE OWNER. THE CONTRACTOR SHALL HAVE NO CLAIM FOR ADDITIONAL COMPENSATION BY REASON OF DELAY AND/OR INCONVENIENCE IN ADAPTING HIS OPERATIONS ACCORDINGLY.

5. ALL DIMENSIONS AND JOB RELATED CONDITIONS ARE TO BE VERIFIED BY THE CONTRACTOR. ANY DISCREPANCIES FOUND ARE TO BE BROUGHT TO THE ATTENTION OF THE OWNER/ENGINEER AND PROPERLY RESOLVED BEFORE PROCEEDING WITH THAT PORTION OF THE WORK. CONTINUATION WITH OTHER ASPECTS OF THE WORK SHALL PROCEED WITHOUT DELAY OR CAUSE FOR CLAIM.

6. IF TRENCH DEWATERING IS REQUIRED, DISCHARGE OF FINES OR SEDIMENTS TO CATCH BASINS, WETLANDS, PONDS OR THE OCEAN IS NOT PERMITTED. CONTRACTOR IS RESPONSIBLE FOR DESIGNING, OPERATING AND MAINTAINING DEWATERING SYSTEMS AND SEDIMENT REMOVAL SYSTEMS. DESIGN SHALL BE COMPLETED UNDER THE DIRECT SUPERVISION OF A PROFESSIONAL CIVIL ENGINEER REGISTERED IN MASSACHUSETTS. TREATMENT SYSTEM SHALL INCLUDE FILTRATION, SETTLING BASINS, SEDIMENTATION TANKS OR OTHER APPROVED METHOD. DISCHARGE LOCATION TO BE PROTECTED AGAINST EROSION AND SCOURING.

7. WHERE EXISTING MATERIALS ARE ENCOUNTERED WHICH, IN THE OPINION OF THE OWNER/ENGINEER ARE UNSUITABLE FOR BEDDING, BACKFILLING OR OTHER INTENDED USE, SUCH MATERIALS SHALL BE REMOVED AS DIRECTED AND REPLACED WITH SUITABLE BANK–RUN GRAVEL, CRUSHED STONE AND/OR SELECTED BORROW, AS DIRECTED BY THE OWNER/ENGINEER AND PAID FOR UNDER THE APPROPRIATE BID ITEMS.

8. ALL GRASSED AREAS DISTURBED BY THE CONSTRUCTION OPERATIONS SHALL BE LOAMED AND SEEDED IN ACCORDANCE WITH THE SPECIFICATIONS. FINAL RESTORATION SHALL BE EQUAL TO OR BETTER THAN THAT WHICH EXISTED PRIOR TO CONSTRUCTION AS DETERMINED SOLELY BY THE OWNER/ENGINEER.

9. WORK PERFORMED BY THE CONTRACTOR SHALL NOT INTERFERE WITH WASTEWATER FLOWS THROUGH THE WASTEWATER TREAT,EMT FACILITY. THE CONTRACTOR SHALL PROVIDE ALL TEMPORARY EQUIPMENT, PIPING, FITTINGS AND APPURTENANCES NECESSARY TO COMPLETE THIS CONTRACT. THE CONTRACTOR SHALL INSTALL AND MAINTAIN ALL TEMPORARY UNIT BYPASS–LINES UNTIL THE MODIFICATIONS AND CONSTRUCTION ARE COMPLETE.

10. THE CONTRACTOR SHALL CONFINE ALL ACTIVITIES FOR CONSTRUCTION PURPOSES WITHIN THE INDICATED LIMITS OF WORK AS SHOWN IN THE CONTRACT DRAWINGS. ALL SURFACES DAMAGED OUTSIDE THE INDICATED LIMITS SHALL BE REPLACED IN KIND AT CONTRACTOR'S EXPENSE.

11. CONTRACTOR IS RESPONSIBLE FOR THE LEGAL AND PROPER DISPOSAL OF ALL DEMOLITION MATERIAL ACCORDING TO THE LAWS OF THE MUNICIPALITY IN WHICH THE WORK IS BEING DONE AND THE COMMONWEALTH OF MASSACHUSETTS. ALL DEMOLITION MATERIAL INCLUDING PUMPS, PIPE, AND BRICK THAT WAS IN CONTACT WITH SEWAGE SHALL BE CLEANED IN ACCORDANCE WITH MADEP REQUIREMENTS AND DISPOSED OF ACCORDINGLY. ONCE CLEANED, DEMOLITION MATERIALS SHALL NOT BE CONSIDERED SPECIAL WASTE.

12. GENERAL CONTRACTOR SHALL COORDINATE WITH THEIR ELECTRICAL SUBCONTRACTOR AND DEFINE THE SCOPE OF WORK IDENTIFIED IN DIVISION 16, TO BE COMPLETED BY THE GC.

YARD PIPING NOTES

1. CONTRACTOR SHALL CONDUCT TEST PITS AS SHOWN AND AT ALL LOCATIONS WHERE NEW PIPING IS TO BE CONNECTED TO EXISTING PIPING AND STRUCTURES TO FIELD VERIFY THE EXACT SIZE, MATERIAL, LOCATION, INVERT ELEVATION AND ALIGNMENT (VERTICAL AND HORIZONTAL) OF EXISTING UNDERGROUND PIPES AND STRUCTURES.

2. THE CONTRACTOR SHALL CONDUCT TEST PITS, AS REQUIRED, IN ORDER TO ASCERTAIN THE EXACT LOCATION OF EXISTING UNDERGROUND UTILITIES.

3. WHERE PIPING IS TO BE CONNECTED TO EXISTING PIPING OR STRUCTURES, THE CONTRACTOR SHALL FURNISH AND INSTALL ALL ADAPTERS, FITTINGS AND ADDITIONAL PIPE (REQUIRED AS A RESULT OF CUTTING THE EXISTING PIPE BACK) TO COMPLETE THE CONNECTION AS REQUIRED.

4. PIPE REPAIR CLAMPS SHALL BE MADE OF STAINLESS STEEL AND PROVIDED WITH TYPE 304 STAINLESS STEEL BOLTS AND NUTS.

5. ALL PIPING SHALL BE PROVIDED WITH FLEXIBLE CONNECTIONS WHERE EXITING OR ENTERING STRUCTURES AND BUILDINGS. FLEXIBLE CONNECTIONS SHALL BE COORDINATED WITH PIPE MANUFACTURER AND APPROVED BY THE ENGINEER.

SUGGESTED SEQUENCE OF CONSTRUCTION

GENERAL NOTES:

1. THE CONTRACTOR'S SEQUENCE OF CONSTRUCTION SHALL BE BASED UPON THE SCHEDULE SUBMITTED BY THE CONTRACTOR AND APPROVED BY THE ENGINEER AS SPECIFIED. HOWEVER, AS A GUIDE FOR THE BIDDERS IN THE PREPARATION OF THEIR BID AND FOR THE CONTRACTOR IN THE PREPARATION OF HIS SCHEDULE, A RECOMMENDED SEQUENCE OF CONSTRUCTION IS PROVIDED ON THIS PLAN.

2. THE ORDER OF CONSTRUCTION SHALL BE SUBJECT TO THE APPROVAL OF THE ENGINEER; SUCH APPROVAL OR DIRECTION, HOWEVER, SHALL IN NO WAY RELIEVE THE CONTRACTOR'S RESPONSIBILITY TO PERFORM THE WORK IN STRICT ACCORDANCE WITH THE CONTRACT DOCUMENTS. THE CONSTRUCTION PLANS AND SPECIFICATIONS HAVE BEEN DEVELOPED TO MINIMIZE THE CONSTRUCTION IMPACTS ON THE OPERATION OF THE CITY'S WASTEWATER TREATMENT FACILITY. THE CONTRACTOR'S WORK SEQUENCE MUST BE SPECIFICALLY DETAILED IN THE CPM WHICH IS REQUIRED UNDER SECTION 01310.

3. WHENEVER THE CONTRACTOR'S PROPOSED WORK WILL REQUIRE THE OWNER TO DEVIATE FROM THE NORMAL OPERATION OF THE WASTEWATER TREATMENT FACILITY, THE CONTRACTOR SHALL SO NOTIFY THE ENGINEER IN WRITING. SUCH NOTIFICATION SHALL BE SUBMITTED ONE (1) WEEK PRIOR TO THE PLANNED CONSTRUCTION ACTIVITY.

SOLIDS HANDLING BUILDING & SLUDGE THICKENERS:

1. SEQUENCE LIST .....
2. BYPASS NOTES ....

PREPARED BY

BETA
www.BETA-Inc.com

REGISTERED PROFESSIONAL

SUBCONSULTANT

PROJECT

Taunton Wastewater Treatment Facility Improvements

Taunton, MA

TITLE

General Notes

NO.	REVISIONS	DATE

DRAWN BY:	BM
DESIGNED BY:	BM
CHECKED BY:	--
ISSUE DATE:	5/15/2020
BETA JOB NO.:	6050

SCALE

NONE

UNLESS OTHERWISE NOTED OR CHANGED BY REPRODUCTION

Not for Construction

SHEET NO.

G-1.3

5/19/2020 10:46 AM J:\TAUNTON\WWTF DESIGN\AUTOCAD\PLAN SET\SOLIDS HANDLING\DRAWING INDEX, LEGEND & GENERAL NOTES.DWG (BETA STD BW.CTB)

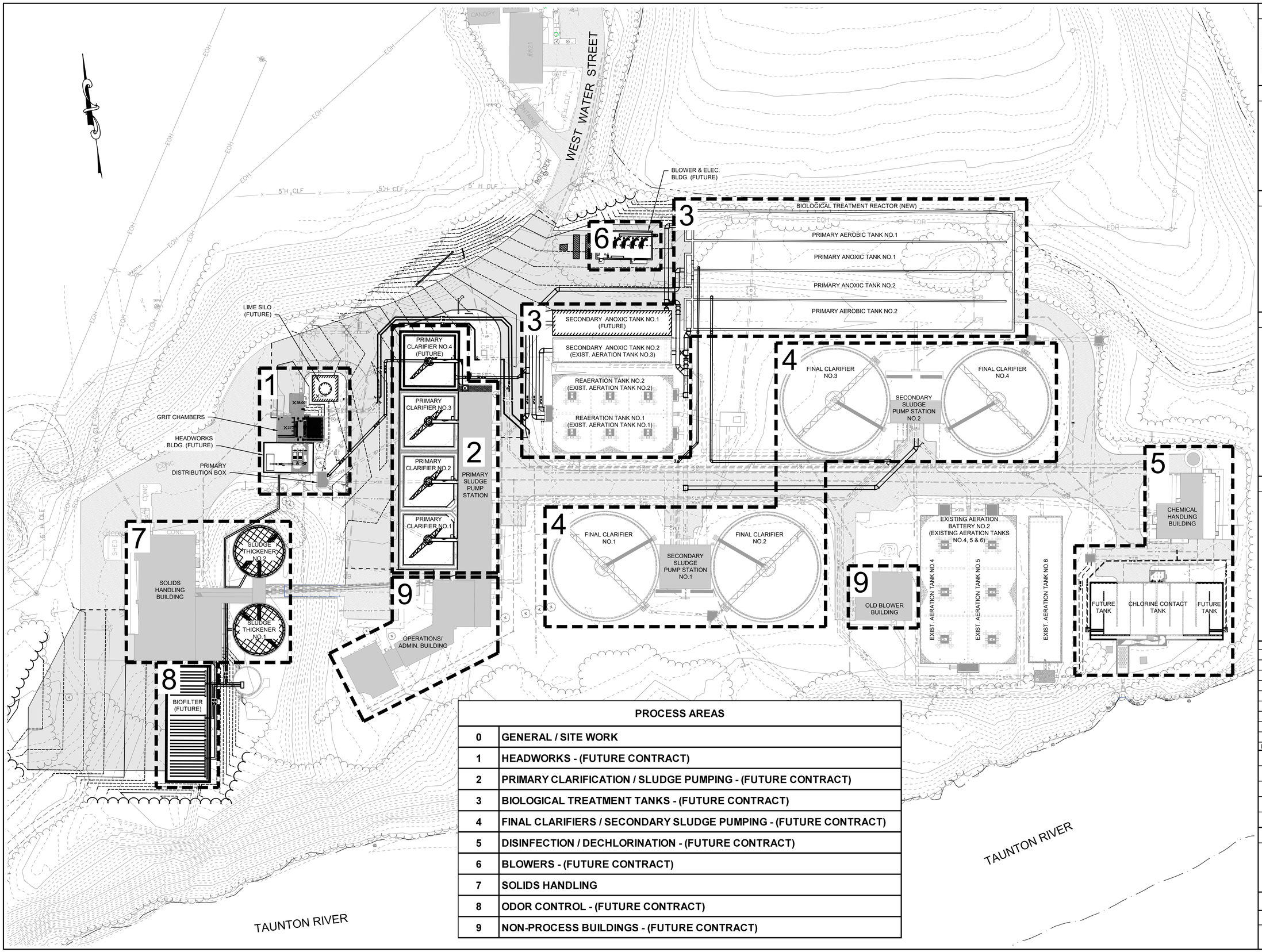

PROCESS AREAS	
0	GENERAL / SITE WORK
1	HEADWORKS - (FUTURE CONTRACT)
2	PRIMARY CLARIFICATION / SLUDGE PUMPING - (FUTURE CONTRACT)
3	BIOLOGICAL TREATMENT TANKS - (FUTURE CONTRACT)
4	FINAL CLARIFIERS / SECONDARY SLUDGE PUMPING - (FUTURE CONTRACT)
5	DISINFECTION / DECHLORINATION - (FUTURE CONTRACT)
6	BLOWERS - (FUTURE CONTRACT)
7	SOLIDS HANDLING
8	ODOR CONTROL - (FUTURE CONTRACT)
9	NON-PROCESS BUILDINGS - (FUTURE CONTRACT)

PREPARED BY

BETA
www.BETA-Inc.com

REGISTERED PROFESSIONAL

SUBCONSULTANT

PROJECT

Taunton Wastewater Treatment Facility Improvements

Taunton, MA

TITLE

WWTF Process Areas Key Plan

NO.	REVISIONS	DATE

DRAWN BY:	BM
DESIGNED BY:	MA
CHECKED BY:	--
ISSUE DATE:	5/15/2020
BETA JOB NO.:	6050

SCALE

40 0 40 80
SCALE IN FEET: 1"=40'

UNLESS OTHERWISE NOTED OR CHANGED BY REPRODUCTION

For Review Only

SHEET NO.

G-1.4

5/19/2020 10:47 AM J:\TAUNTON\WWTF DESIGN\AUTOCAD\PLAN SET\SOLIDS HANDLING\WWTF PROCESS AREAS.DWG (BETA STD BW.CTB)

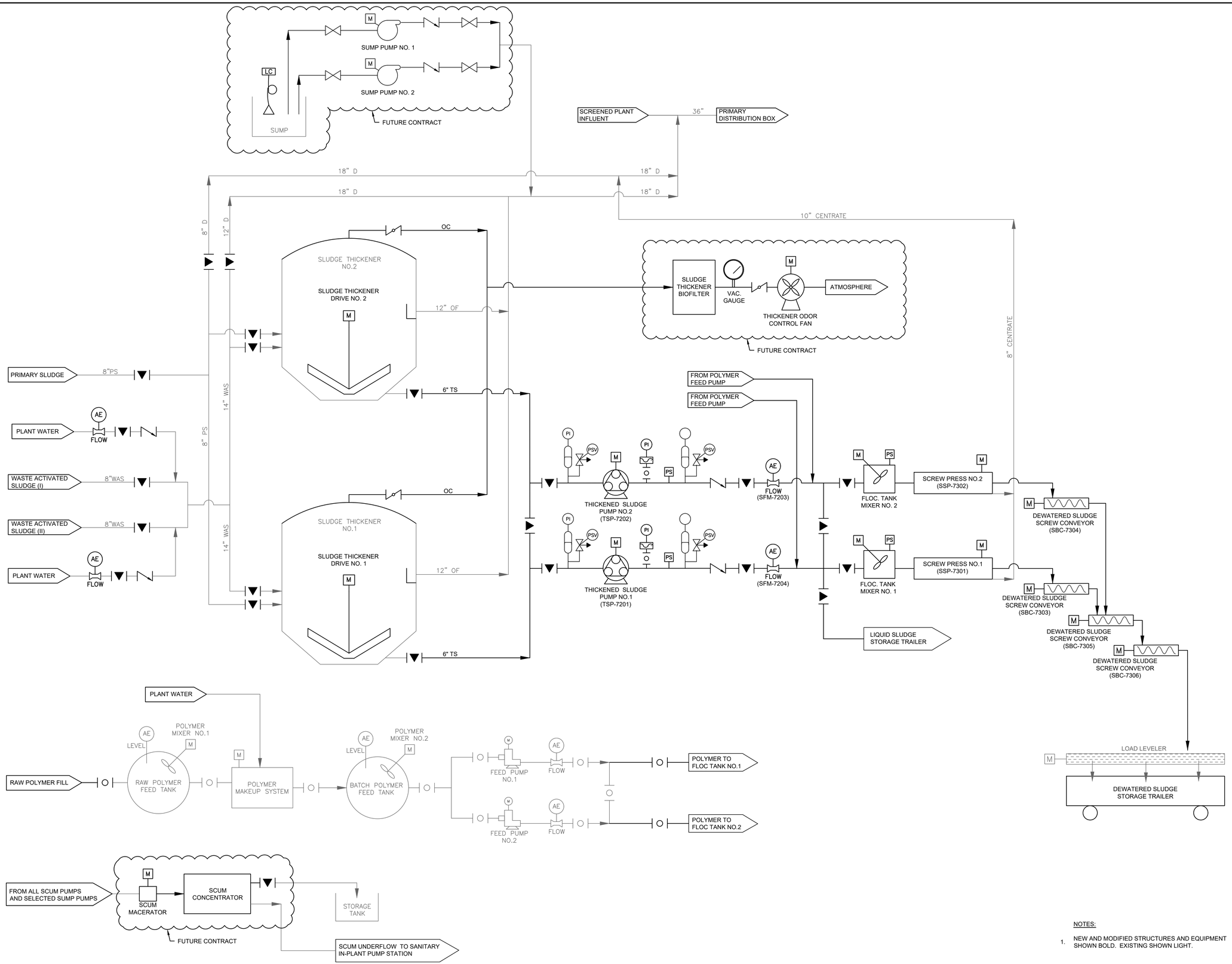

NOTES:

1. NEW AND MODIFIED STRUCTURES AND EQUIPMENT SHOWN BOLD. EXISTING SHOWN LIGHT.

PREPARED BY

BETA
www.BETA-Inc.com

REGISTERED PROFESSIONAL

SUBCONSULTANT

PROJECT

Taunton Wastewater Treatment Facility Improvements

Taunton, MA

TITLE

Process Flow Diagram Solids Handling

NO.	REVISIONS	DATE

DRAWN BY:	BM
DESIGNED BY:	JD
CHECKED BY:	--
ISSUE DATE:	5/15/2020
BETA JOB NO.:	6050

SCALE

NONE

UNLESS OTHERWISE NOTED OR CHANGED BY REPRODUCTION

Not for Construction

SHEET NO.

G-2.1

5/19/2020 10:48 AM J:\TAUNTON\WWTF DESIGN\AUTOCAD\PLAN SET\SOLIDS HANDLING\WWTF PROCESS FLOW DIAGRAMS - PROP.DWG (BETA STD BW.CTB)

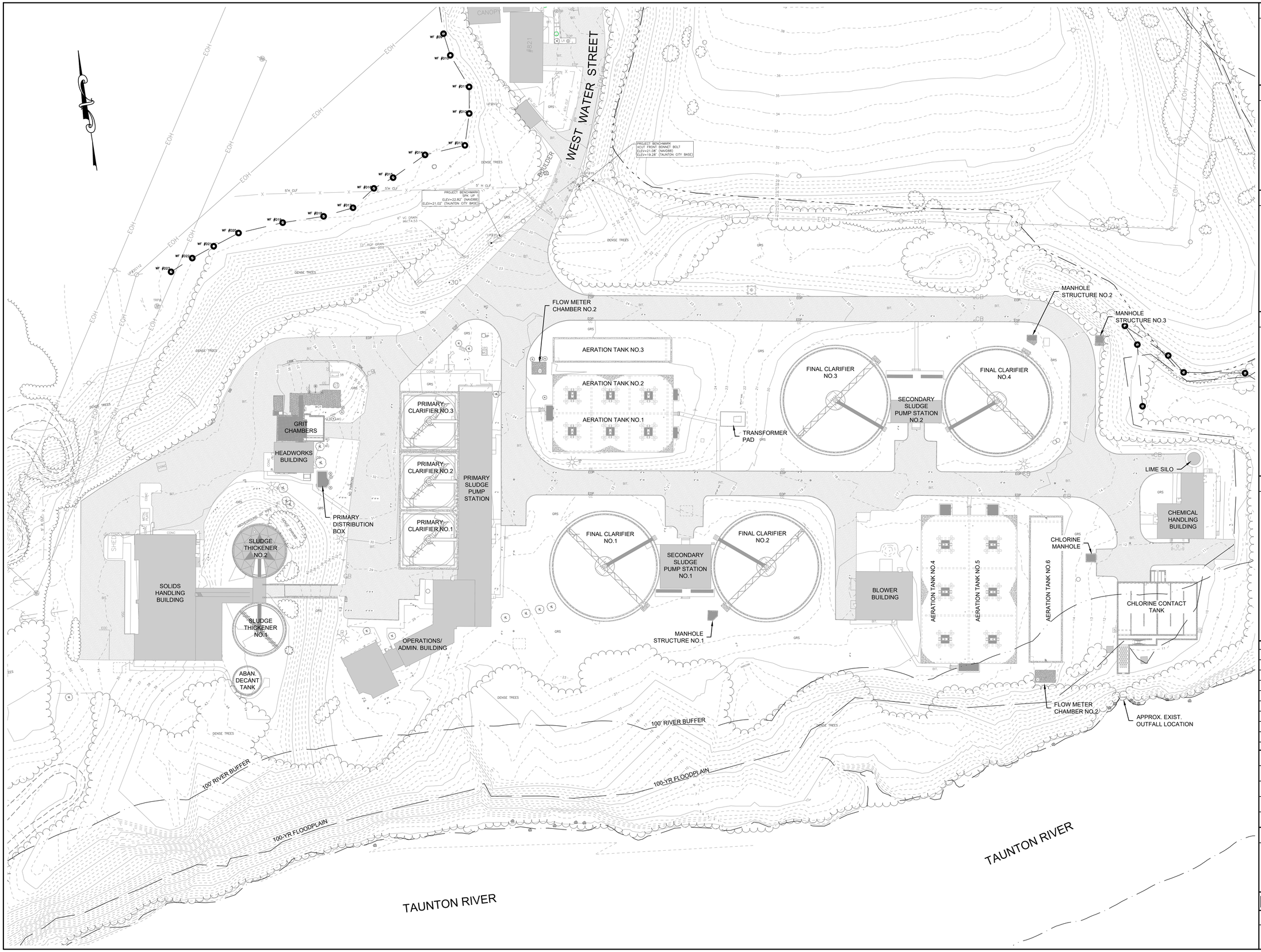

PREPARED BY

BETA
www.BETA-Inc.com

REGISTERED PROFESSIONAL

NOT FOR CONSTRUCTION (CONCEPTUAL)

SUBCONSULTANT

PROJECT

Taunton Wastewater Treatment Facility Improvements

Taunton, MA

TITLE

WWTF Existing Site Plan

NO.	REVISIONS	DATE

DRAWN BY:	BM
DESIGNED BY:	BM
CHECKED BY:	--
ISSUE DATE:	5/15/2020
BETA JOB NO.:	6050

SCALE

40 0 40 80

SCALE IN FEET: 1"=40'

UNLESS OTHERWISE NOTED OR CHANGED BY REPRODUCTION

Not for Construction

SHEET NO.

C-1.1

5/19/2020 10:49 AM J:\TAUNTON\WWTF DESIGN\AUTOCAD\PLAN SET\SOLIDS HANDLING\WWTF SITE PLAN - EXIST.DWG (BETA STD BW.CTB)

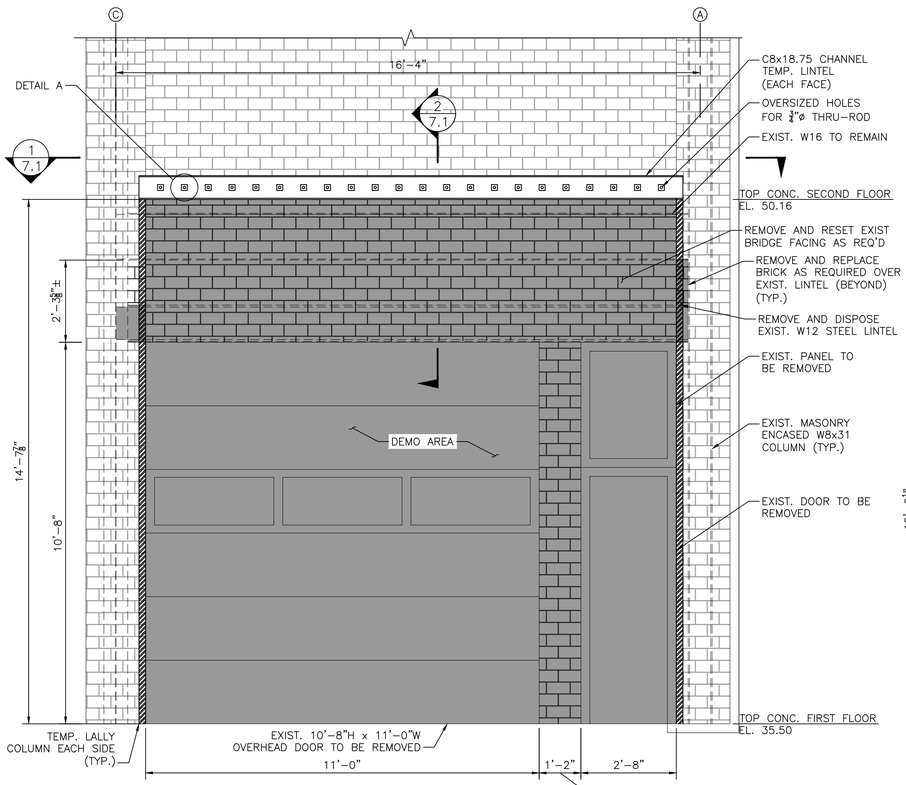

DEMO ELEVATION

SCALE: 1/2" = 1'-0"

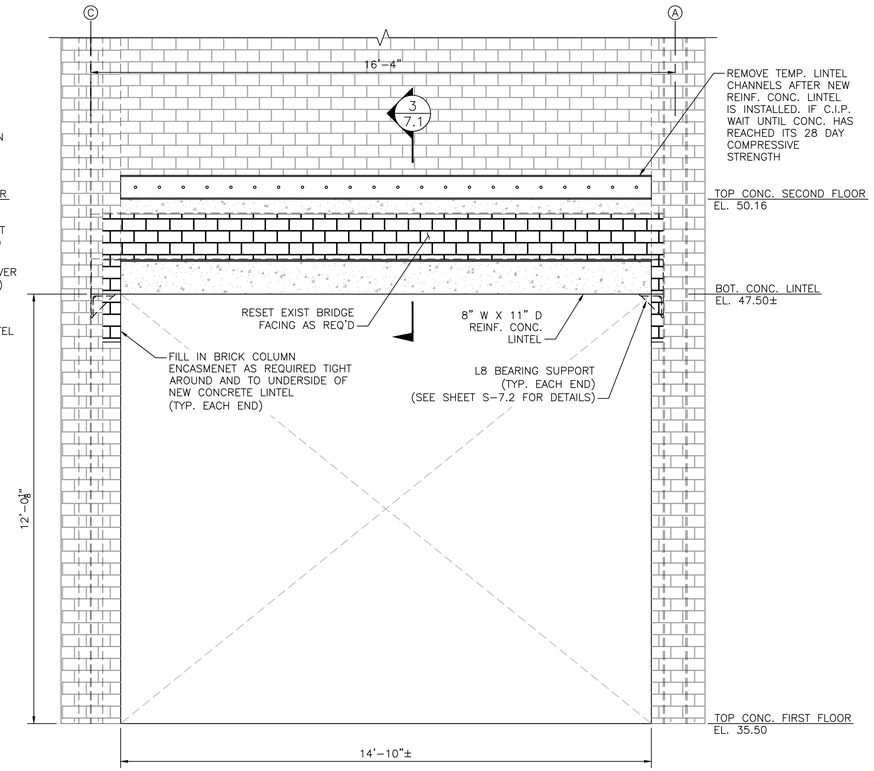

ELEVATION

SCALE: 1/2" = 1'-0"

NOTES:

1. REINFORCED CONCRETE LINTEL TO CAST-IN-PLACE. PRECAST LINTEL TO BE APPROVED BY ENGINEER.
2. CONCRETE MASONRY UNIT (CMU) CONSTRUCTION SHALL CONFORM TO BUILDING CODE REQUIREMENTS FOR MASONRY STRUCTURES (ACI 530).
3. ANY NEW CONCRETE MASONRY UNITS SHALL CONFORM TO ASTM C-90.
4. MORTAR SHALL CONFORM TO ASTM C-270, TYPE M.
5. GROUT SHALL CONFORM TO ASTM C-476 2,000 PSI.
6. ALL CONCRETE TO HAVE A MINIMUM 28 DAY COMPRESSIVE STRENGTH OF 4000 PSI.
7. STEEL REINFORCING SHALL BE IN ACCORDANCE WITH ASTM A615 GRADE 60.
8. NEW OPENING FOR 14'-10"± WIDE x 11'-11 1/2"± HIGH DOOR. INSTALLATION OF DOOR TO BE PER MANUFACTURERS RECOMMENDATIONS.
9. 3/8" BENT PL TO BE GALVANIZED IN ACCORDANCE WITH ASTM A153.
10. STEEL HARDWARE SHALL BE IN ACCORDANCE WITH ASTM A307 (GALVANIZED).
11. ALL STRUCTURAL STEEL SHALL BE IN ACCORDANCE WITH ASTM A36.
12. IF PRECAST CONCRETE, JACK PRECAST CONCRETE LINTEL TIGHT AND DRY PACK ANY VOIDS AS REQUIRED.
13. REMOVE EXISTING MASONRY PIER ENCASEMENT AS REQUIRED TO INSTALL L8 BEARING SUPPORT AND REINFORCED CONCRETE LINTEL BEAM. ALL VOIDED AREAS SHALL BE FIT TIGHT WITH MATCHING BRICK ON ALL SIDES, AS REQUIRED.

SUGGESTED TEMPORARY LINTEL SEQUENCE:

1. FULLY GROUT EXISTING WALL AT JAMB & TEMP. LINTEL ZONES SHOWN. EXTENT OF GROUT SHALL BE FROM THE TOP OF THE TEMP. STEEL LINTEL TO THE BOTTOM OF THE WALL.
2. LAY OUT THE THRU-ROD HOLES AT EXISTED GROUTED CELLS IN ACCORDANCE WITH THE PATTERN SHOWN. DRILL HOLES THROUGH THE WALL AT THESE LOCATIONS. VERIFY THAT ALL HOLES ARE THROUGH GROUTED CELLS.
3. INSTALL THRU-RODS. INJECT EPOXY FILL TO FILL ANNULAR SPACE AROUND THE ROD HOLES TO PRODUCE A SOLID BEARING.
4. INSTALL C8 ON BOTH SIDES OF WALL.
5. COVER LINTEL OVERSIZED HOLES WITH 2"x2"x3/8" PL WITH STD. HOLES. WELD IN PLACE. INSTALL NUTS. TIGHTEN BOLTS GRADUALLY AND ENSURE EXTERIOR BRICK FACE IS NOT DAMAGED OR DEFLECTING LATERALLY.
6. CAREFULLY REMOVED BLOCK FROM OPENING, TAKING CARE TO NOT DAMAGE SURROUNDING WALLS AND COLUMNS.

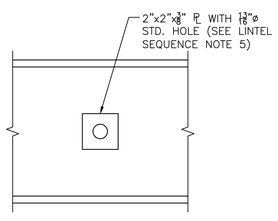

DETAIL A

SCALE: 3" = 1'-0"

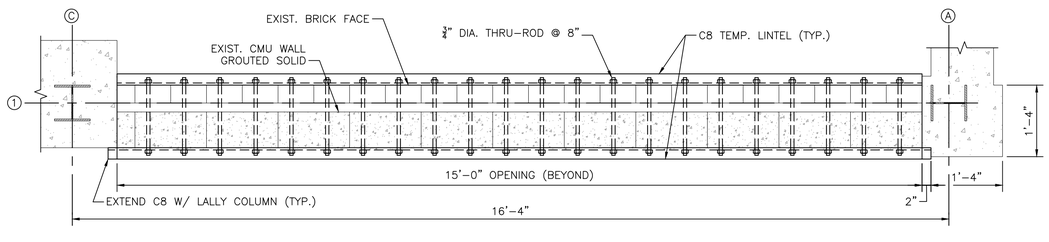

SECTION 1

SCALE: 3/4" = 1'-0"

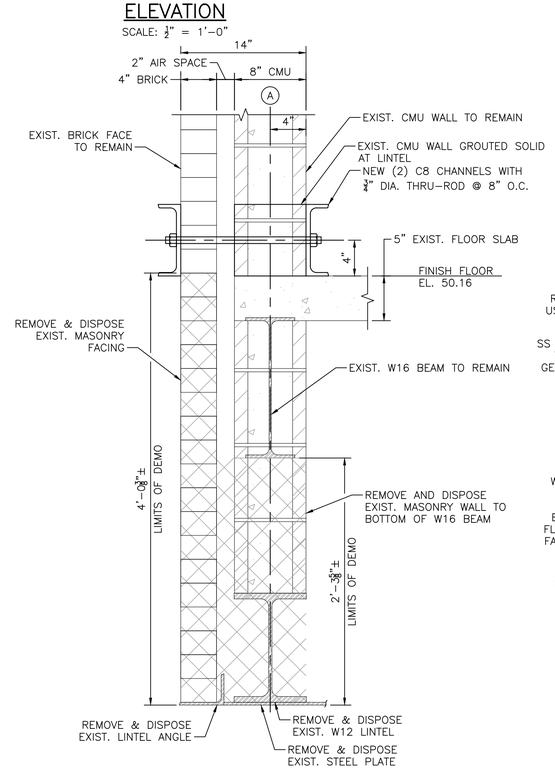

SECTION 2

SCALE: 1 1/2" = 1'-0"

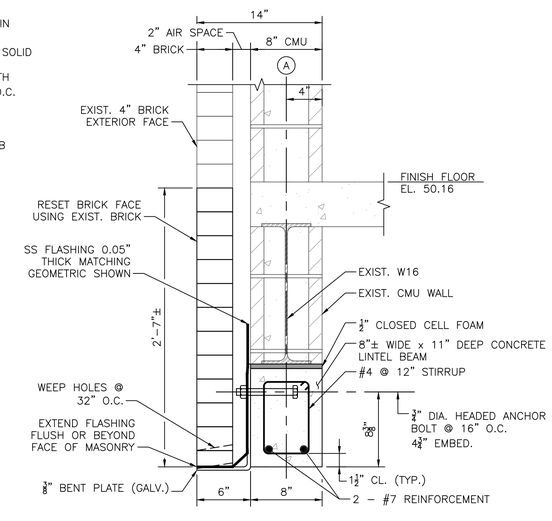

SECTION 3

SCALE: 1 1/2" = 1'-0"

PREPARED BY

BETA
www.BETA-Inc.com

REGISTERED PROFESSIONAL

NOT FOR CONSTRUCTION (CONCEPTUAL)

SUBCONSULTANT

PROJECT

Taunton Wastewater Treatment Facility Improvements

Taunton, MA

TITLE

Sludge Handling Details

NO.	REVISIONS	DATE

DRAWN BY:	BN
DESIGNED BY:	BN
CHECKED BY:	TMW
ISSUE DATE:	-
BETA JOB NO.:	6050

SCALE

AS SHOWN

UNLESS OTHERWISE NOTED OR CHANGED BY REPRODUCTION

Not for Construction

SHEET NO.

S-7.1

5/19/2020 10:50 AM \\BETAINC.COM\R\TRANS\6000S\6050 - TAUNTON WWTP\DRAWING FILES\PLANSET\6050_SR7.1.DWG (BETA STD BW.CTB)

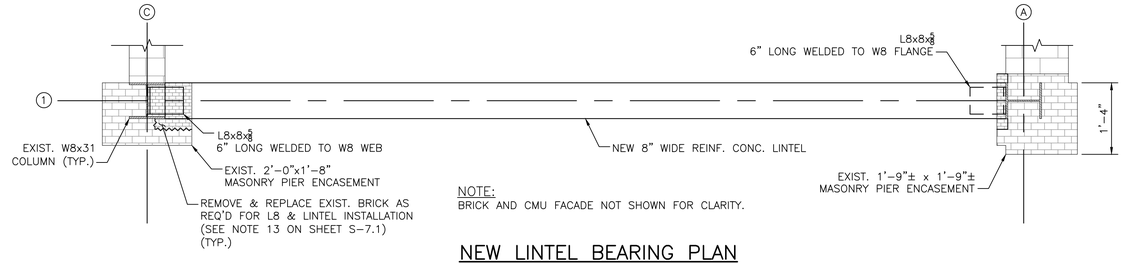

NOTE:
BRICK AND CMU FACADE NOT SHOWN FOR CLARITY.

NEW LINTEL BEARING PLAN

SCALE: 3/4" = 1'-0"

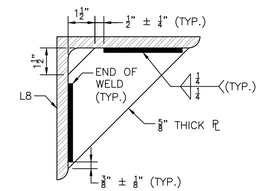

CLIP DETAIL

SCALE: 3"=1'-0"

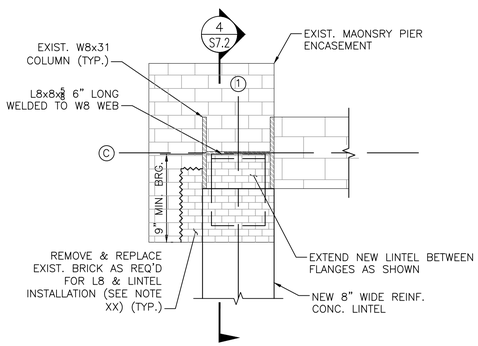

BEARING PLAN AT COLUMN C1

SCALE: 1 1/2"=1'-0"

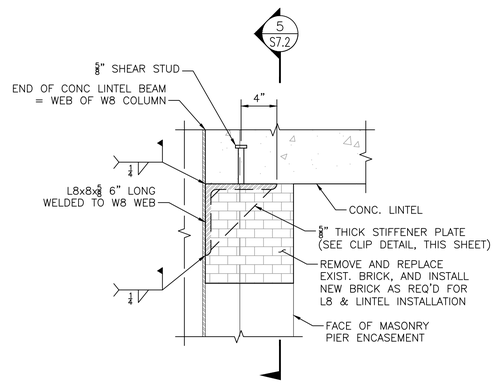

SECTION 4

SCALE: 1 1/2"=1'-0"

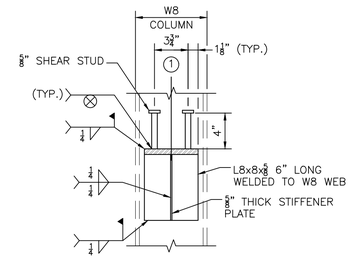

NOTE:
CONC. LINTEL BEAM AND PIER
ENCASEMENT NOT SHOWN FOR
CLARITY.

SECTION 5

SCALE: 1 1/2"=1'-0"

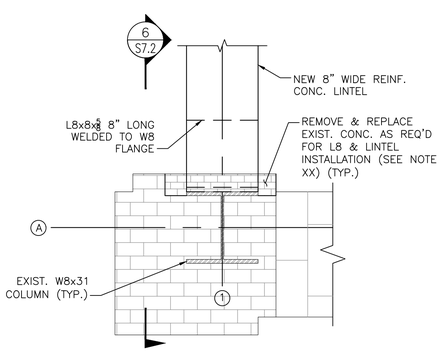

BEARING PLAN AT COLUMN A1

SCALE: 1 1/2"=1'-0"

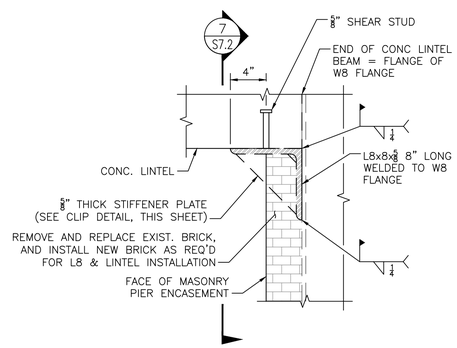

SECTION 6

SCALE: 1 1/2"=1'-0"

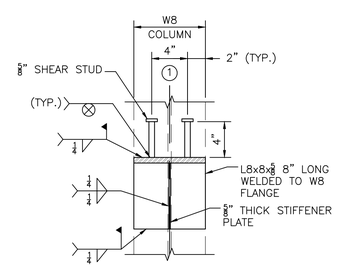

NOTE:
CONC. LINTEL BEAM AND PIER
ENCASEMENT NOT SHOWN FOR
CLARITY.

SECTION 7

SCALE: 1 1/2"=1'-0"

PREPARED BY

BETA
www.BETA-Inc.com

REGISTERED PROFESSIONAL

NOT FOR CONSTRUCTION (CONCEPTUAL)

SUBCONSULTANT

PROJECT

Taunton Wastewater Treatment Facility Improvements

Taunton, MA

TITLE

Sludge Handling Lintel Bearing Details

NO.	REVISIONS	DATE

DRAWN BY:	BN
DESIGNED BY:	BN
CHECKED BY:	TMW
ISSUE DATE:	-
BETA JOB NO.:	6050

SCALE

AS SHOWN

UNLESS OTHERWISE NOTED OR CHANGED BY REPRODUCTION

Not for Construction

SHEET NO.

S-7.2

5/19/2020 10:51 AM \\BETA-INC.COM\RUTRANS\6000S\6050 - TAUNTON WWTF\DRAWING FILES\PLANSET\6050_SR7.2.DWG (BETA STD BW.CTB)

NOTES:

1. THE DEMOLITION LIMITS SHOWN APPLY TO SLUDGE THICKENER NO.1 & SLUDGE THICKENER NO.2.
2. ONLY SLUDGE THICKENER NO.2 HAS AN EXISTING DOME COVER. SLUDGE THICKENER NO.1 IS UNCOVERED
3. SLUDGE THICKENERS ARE DEWATERED USING THE EXISTING THICKENED SLUDGE PUMPS

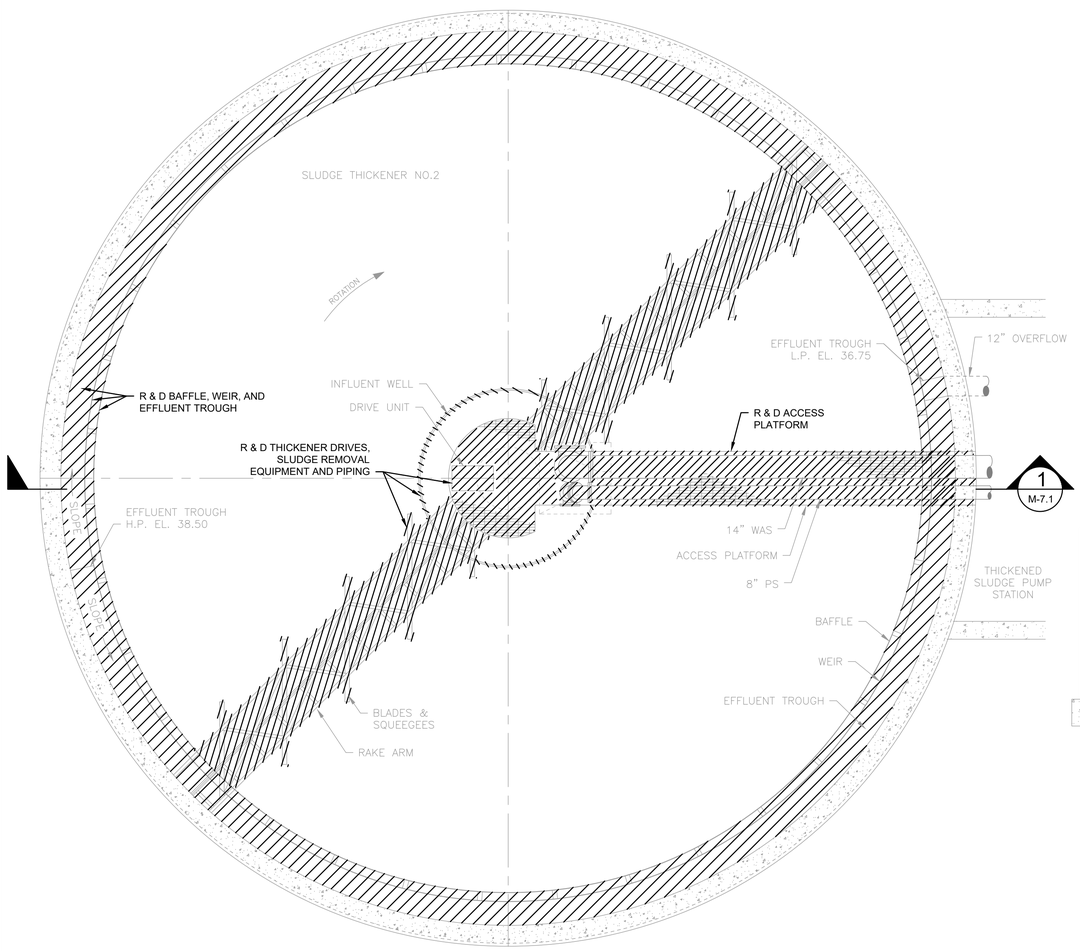

PLAN (EL. 50.0)

SCALE: 1/4"= 1'-0"

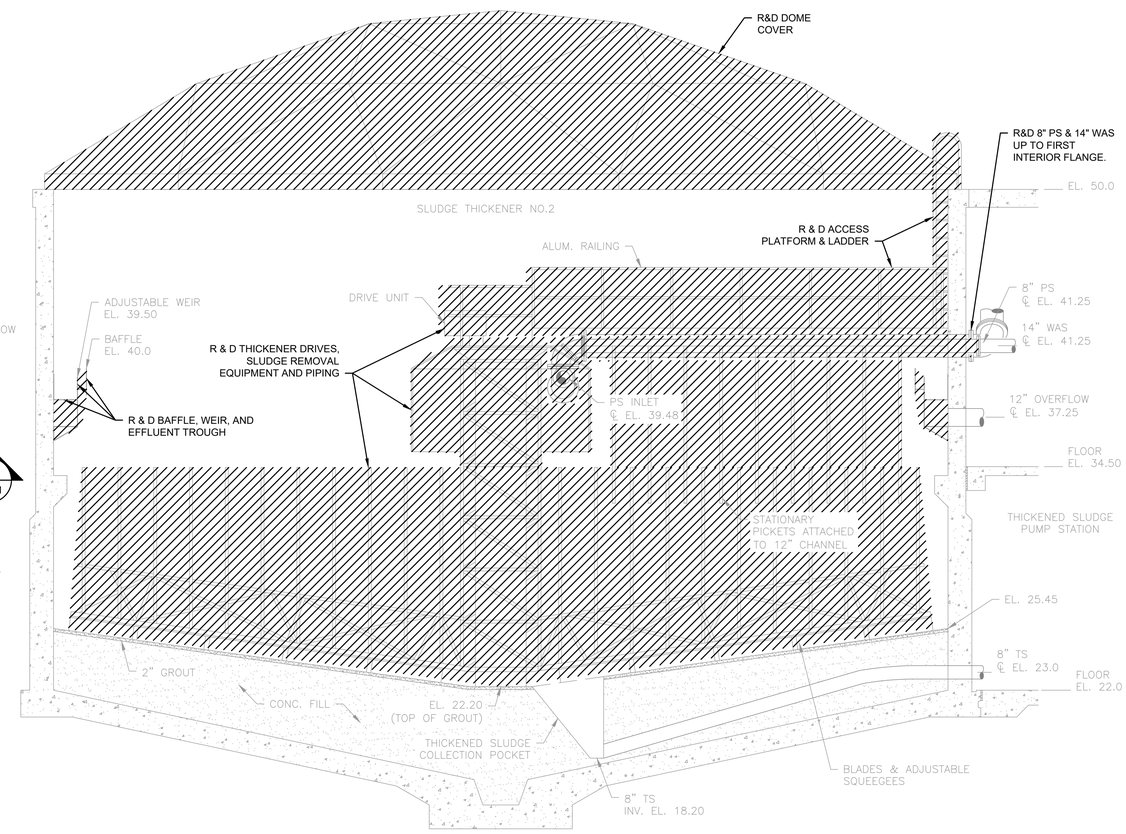

SECTION 1 / M-7.1

SCALE: 1/4"= 1'-0"

PREPARED BY

BETA

www.BETA-Inc.com

REGISTERED PROFESSIONAL

SUBCONSULTANT

PROJECT

Taunton Wastewater Treatment Facility Improvements

Taunton, MA

TITLE

Sludge Thickener Tanks Demolition Plan & Section

NO.	REVISIONS	DATE

DRAWN BY:	BM
DESIGNED BY:	BM
CHECKED BY:	--
ISSUE DATE:	5/15/2020
BETA JOB NO.:	6050

SCALE

AS SHOWN

UNLESS OTHERWISE NOTED OR CHANGED BY REPRODUCTION

Not for Construction

SHEET NO.

M-7.1

5/19/2020 10:52 AM J:\TAUNTON\WWTF DESIGN\AUTOCAD\PLAN SETS\SOLIDS HANDLING\SOLIDS HANDLING BUILDING & TANKS - EXIST. PLANS & SECTIONS.DWG (BETA STD BW.CTB)

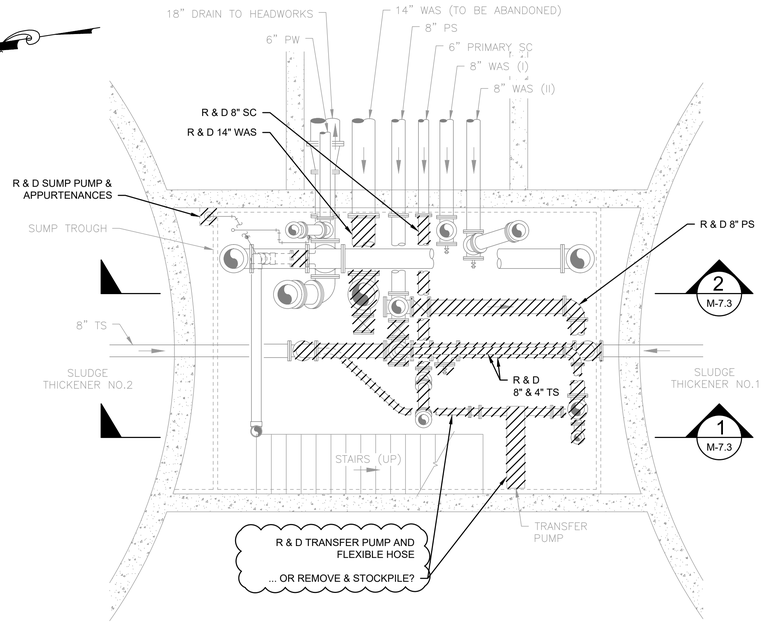

LOWER LEVEL - PLAN (EL. 34.0)

SCALE: 1/4"= 1'-0"

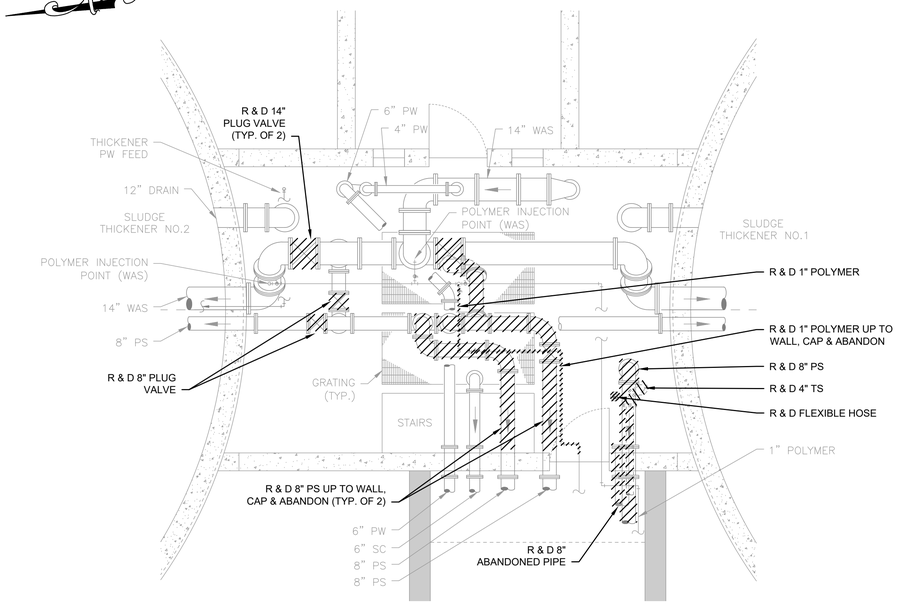

UPPER LEVEL - PLAN (EL. 49.0)

SCALE: 1/4"= 1'-0"

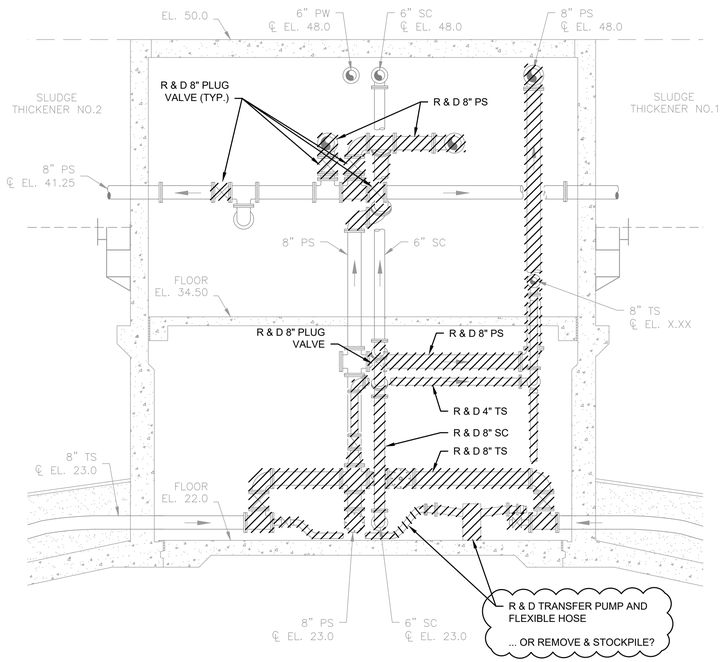

SECTION 1 (M-7.3)

SCALE: 1/4"= 1'-0"

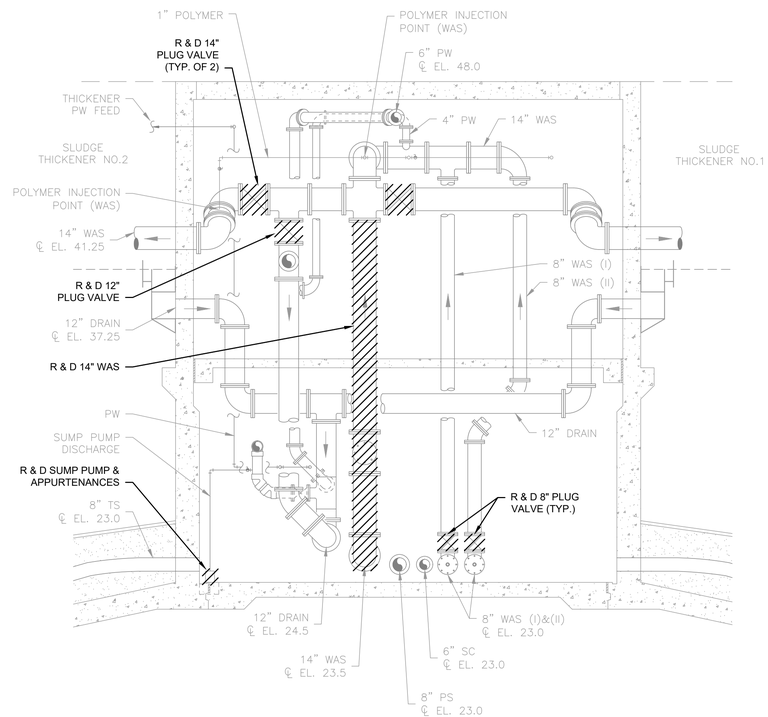

SECTION 2 (M-7.3)

SCALE: 1/4"= 1'-0"

PREPARED BY

BETA
www.BETA-Inc.com

REGISTERED PROFESSIONAL

SUBCONSULTANT

PROJECT

Taunton Wastewater Treatment Facility Improvements

Taunton, MA

TITLE

Thickened Sludge Pump Station Demolition Plans & Sections

NO.	REVISIONS	DATE

DRAWN BY:	BM
DESIGNED BY:	BM
CHECKED BY:	--
ISSUE DATE:	5/15/2020
BETA JOB NO.:	6050

SCALE

AS SHOWN

UNLESS OTHERWISE NOTED OR CHANGED BY REPRODUCTION

Not for Construction

SHEET NO.

M-7.2

5/19/2020 10:52 AM J:\TAUNTON\WWTF DESIGN\AUTOCAD\PLAN SETS\SOLIDS HANDLING\SOLIDS HANDLING BUILDING & TANKS - EXIST. PLANS & SECTIONS.DWG (BETA STD BW.CTB)

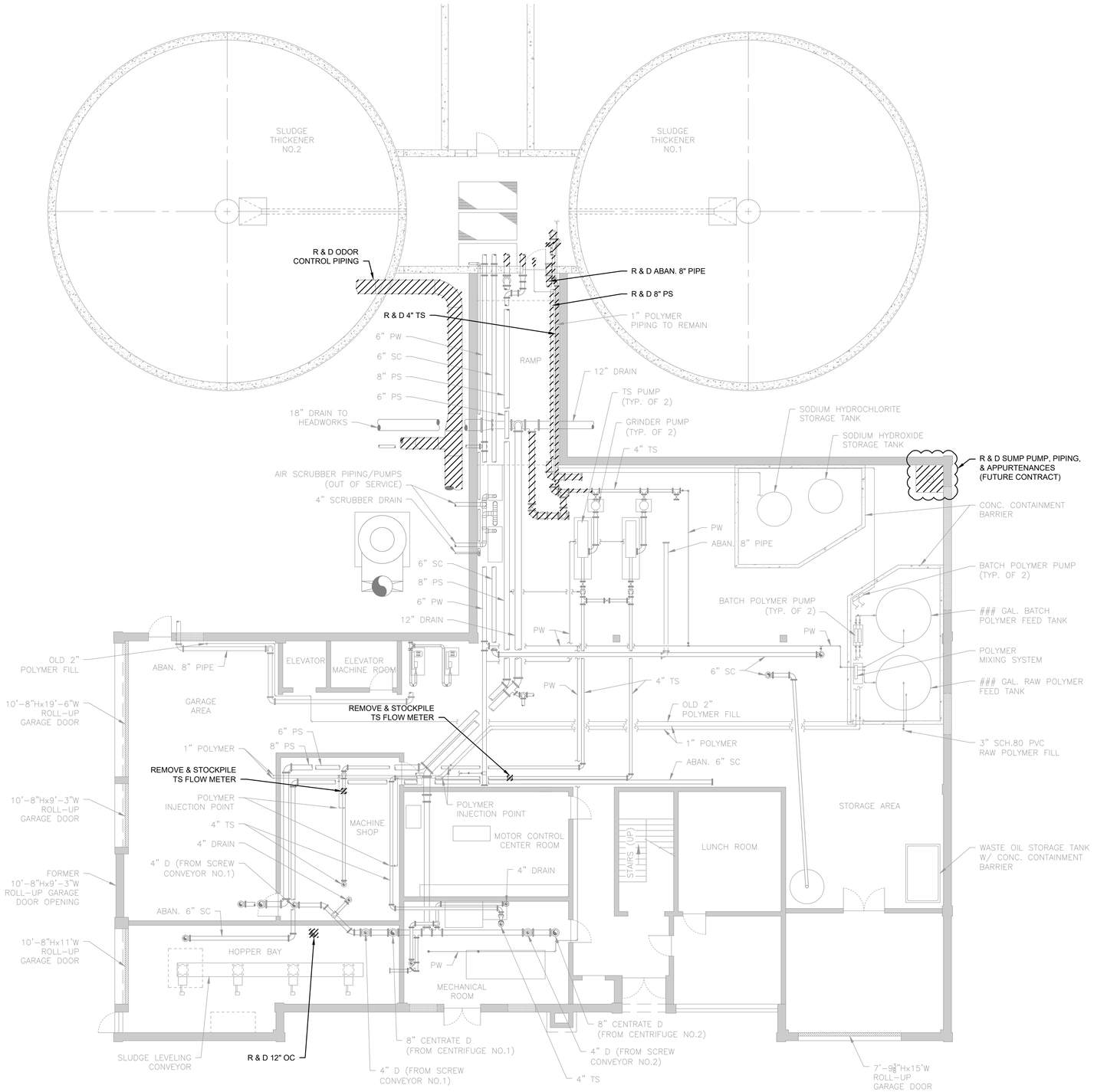

FIRST FLOOR - PLAN (EL. 49.0)

SCALE: 1/8"= 1'-0"

PREPARED BY

BETA
www.BETA-Inc.com

REGISTERED PROFESSIONAL

SUBCONSULTANT

PROJECT

Taunton Wastewater Treatment Facility Improvements

Taunton, MA

TITLE

Solids Handling Building First Floor Demolition Plan

NO.	REVISIONS	DATE

DRAWN BY:	BM
DESIGNED BY:	BM
CHECKED BY:	--
ISSUE DATE:	5/15/2020
BETA JOB NO.:	6050

SCALE

AS SHOWN

UNLESS OTHERWISE NOTED OR CHANGED BY REPRODUCTION

Not for Construction

SHEET NO.

M-7.3

5/19/2020 10:52 AM J:\TAUNTON\WWTF DESIGN\AUTOCAD\PLAN SETS\SOLIDS HANDLING\SOLIDS HANDLING BUILDING & TANKS - EXIST. PLANS & SECTIONS.DWG (BETA STD BW.CTB)

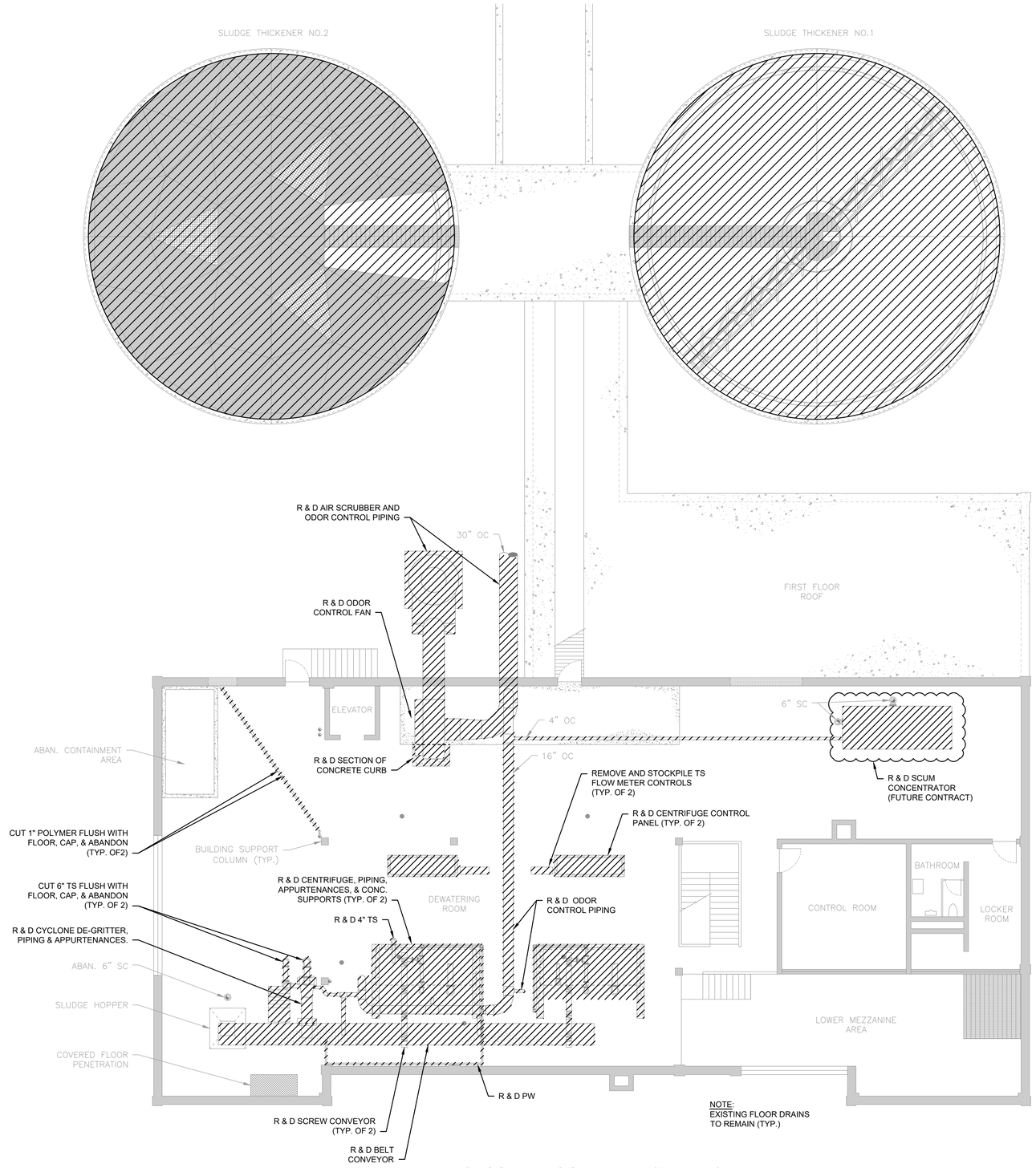

SECOND FLOOR - PLAN (EL. 65.0)

SCALE: 1/8"= 1'-0"

PREPARED BY

BETA
www.BETA-Inc.com

REGISTERED PROFESSIONAL

SUBCONSULTANT

PROJECT

Taunton Wastewater Treatment Facility Improvements

Taunton, MA

TITLE

Solids Handling Building Second Floor Demolition Plan

NO.	REVISIONS	DATE

DRAWN BY:	BM
DESIGNED BY:	BM
CHECKED BY:	--
ISSUE DATE:	5/15/2020
BETA JOB NO.:	6050

SCALE

AS SHOWN

UNLESS OTHERWISE NOTED OR CHANGED BY REPRODUCTION

Not for Construction

SHEET NO.

M-7.4

5/19/2020 10:53 AM J:\TAUNTON\WWTF DESIGN\AUTOCAD\PLAN SET\SOLIDS HANDLING\SOLIDS HANDLING BUILDING & TANKS - EXIST. PLANS & SECTIONS.DWG (BETA STD BW.CTB)

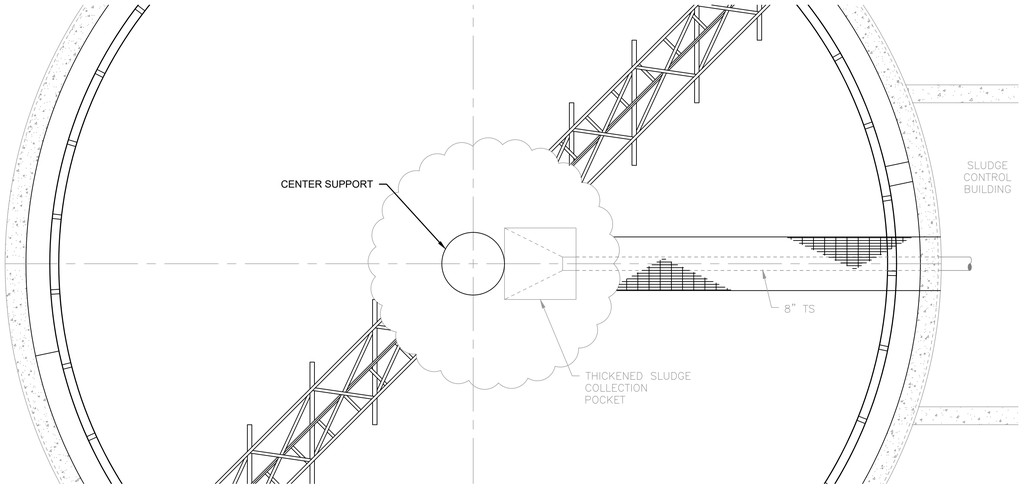

PLAN
SCALE: 1/4"= 1'-0"

NOTES:

1. THE PROPOSED WORK SHOWN APPLY TO SLUDGE THICKENER NO.1 & SLUDGE THICKENER NO.2.

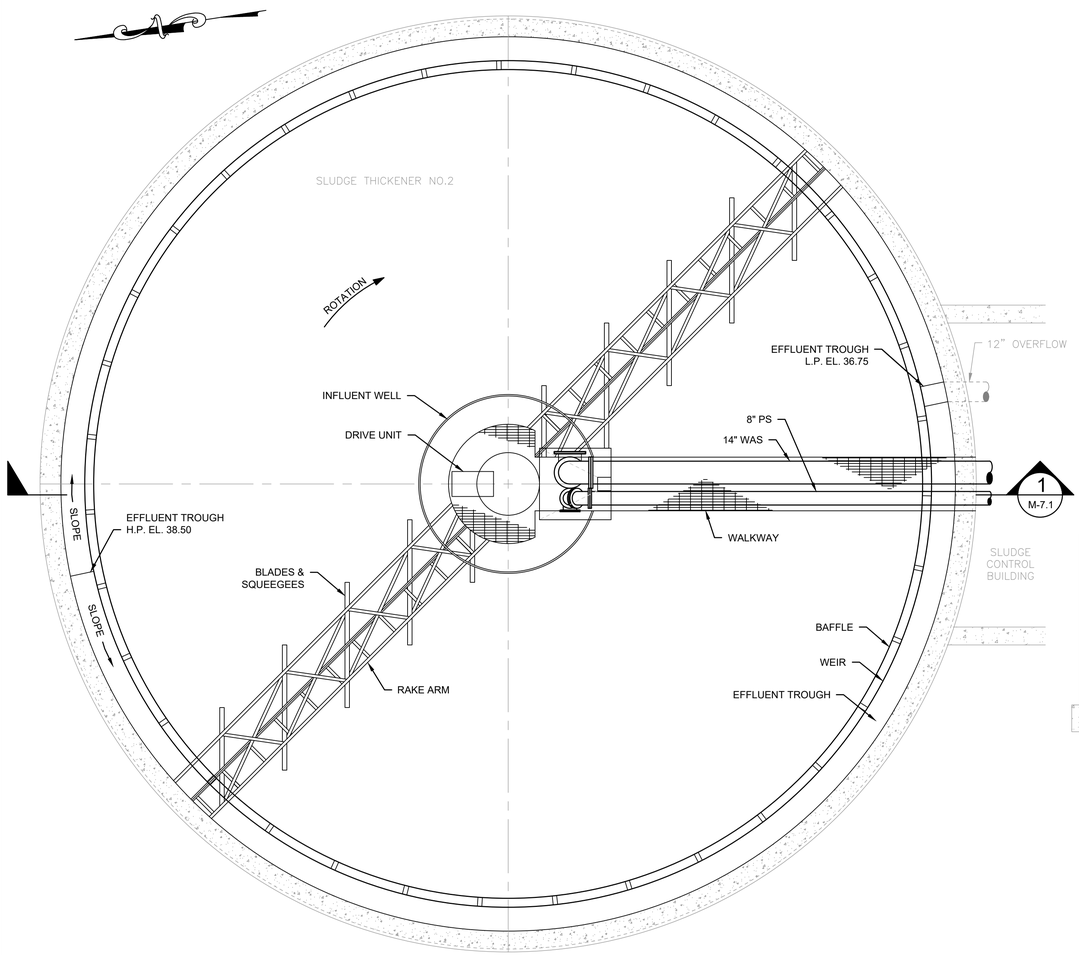

PLAN (EL. 50.0)
SCALE: 1/4"= 1'-0"

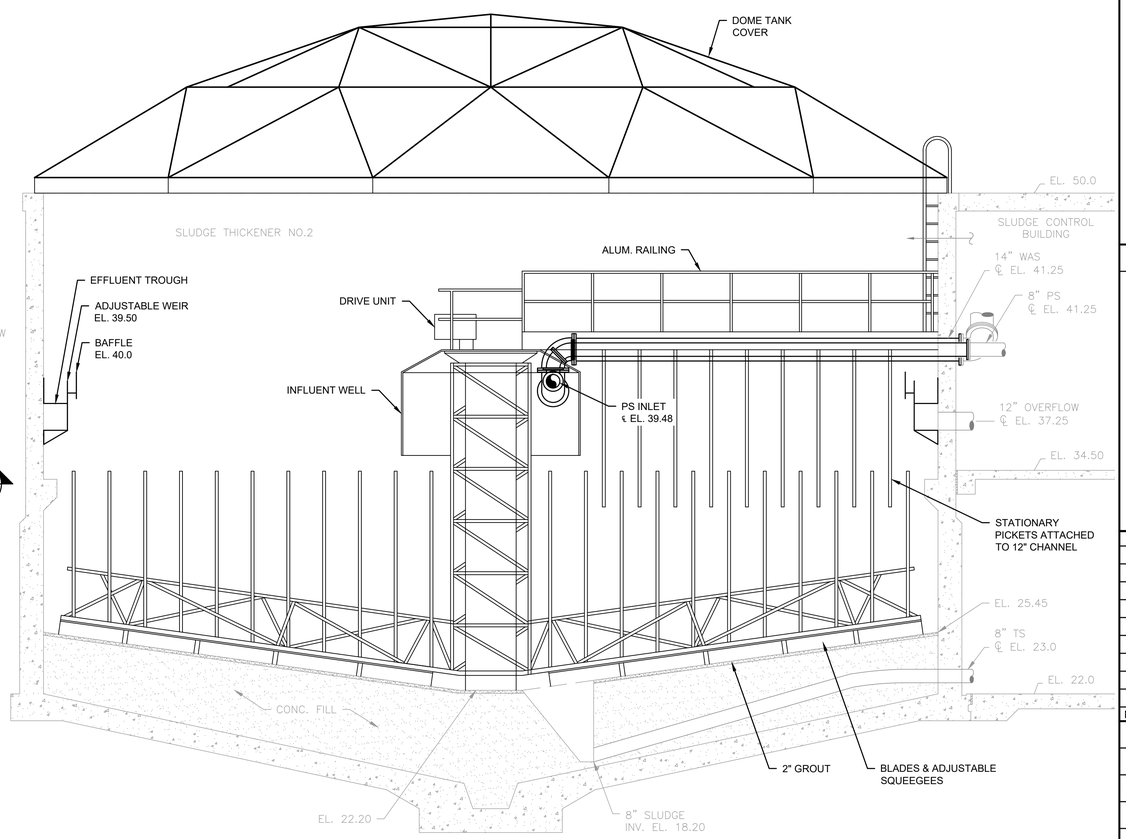

SECTION 1
SCALE: 1/4"= 1'-0"
M-7.1

PREPARED BY

BETA
www.BETA-Inc.com

REGISTERED PROFESSIONAL

SUBCONSULTANT

PROJECT

Taunton Wastewater Treatment Facility Improvements

Taunton, MA

TITLE

Gravity Thickening Tanks Plans & Sections

NO.	REVISIONS	DATE

DRAWN BY:	BM
DESIGNED BY:	JD
CHECKED BY:	--
ISSUE DATE:	2/28/2020
BETA JOB NO.:	6050

SCALE

AS SHOWN

UNLESS OTHERWISE NOTED OR CHANGED BY REPRODUCTION

Not for Construction

SHEET NO.

M-7.5

5/19/2020 10:54 AM J:\TAUNTON\WWTF DESIGN\AUTOCAD\PLAN SET\SOLIDS HANDLING\SOLIDS HANDLING BUILDING & TANKS - PROP. PLANS & SECTIONS.DWG (BETA STD BW.CTB)

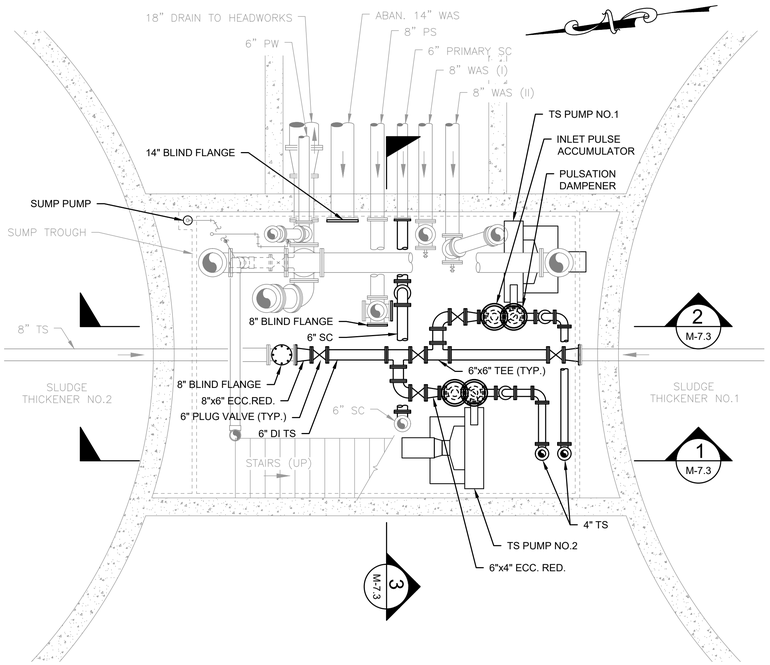

LOWER LEVEL - PLAN (EL. 34.0)

SCALE: 1/4"= 1'-0"

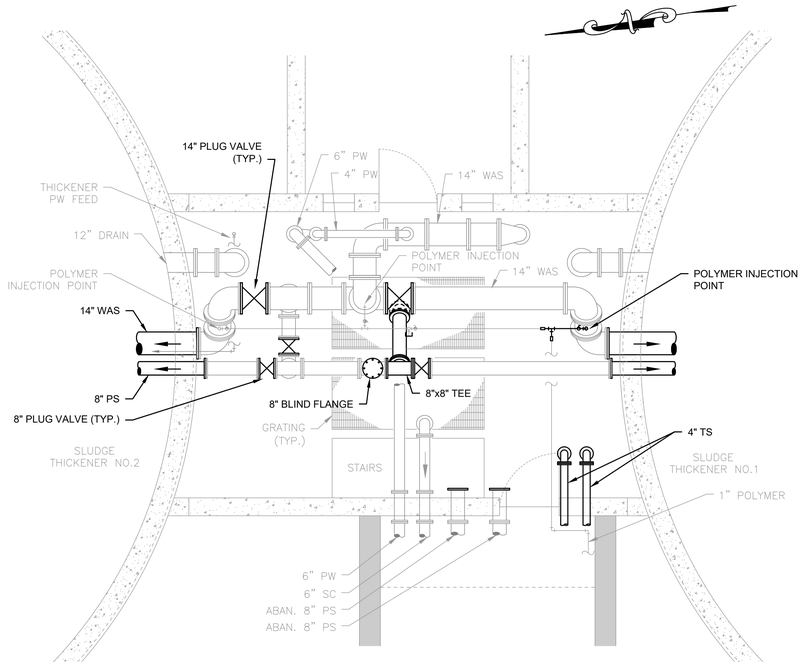

UPPER LEVEL - PLAN (EL. 49.0)

SCALE: 1/4"= 1'-0"

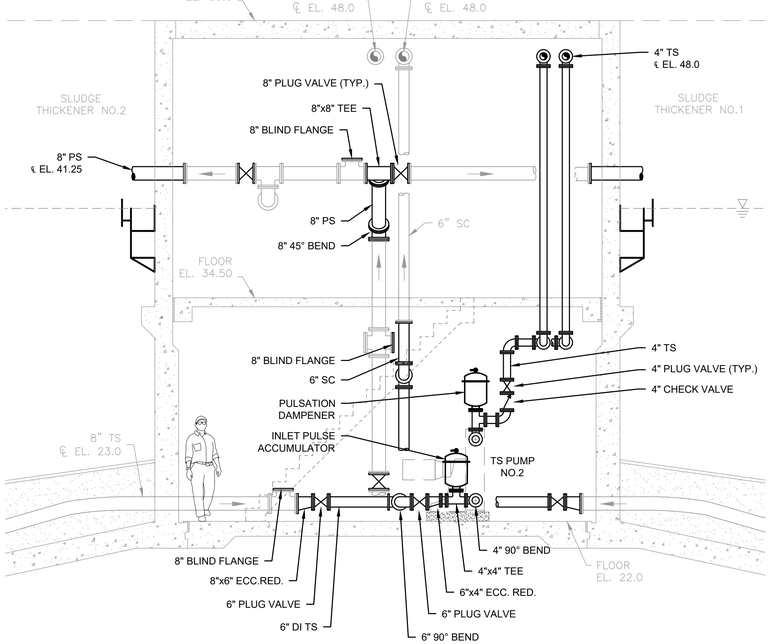

SECTION 1 (M-7.3)

SCALE: 1/4"= 1'-0"

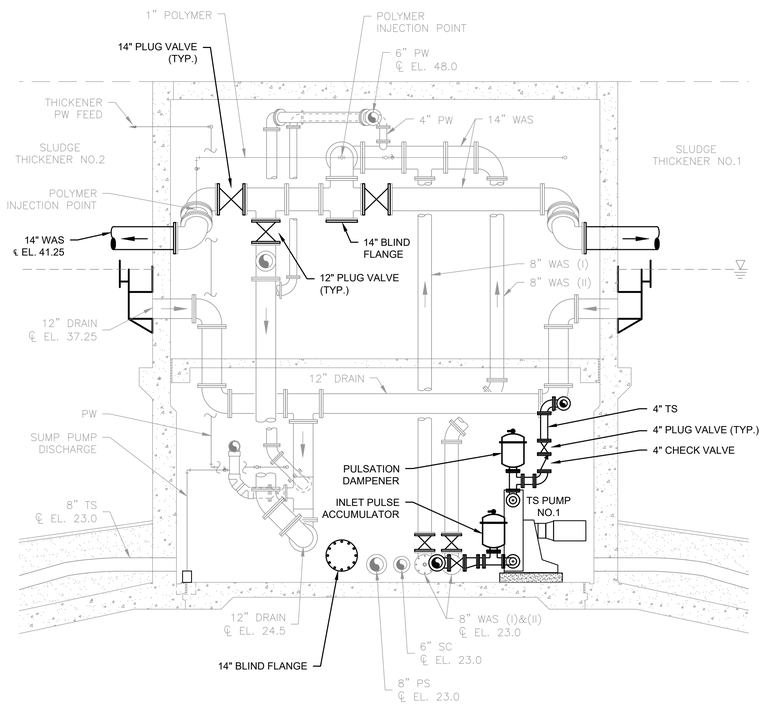

SECTION 2 (M-7.3)

SCALE: 1/4"= 1'-0"

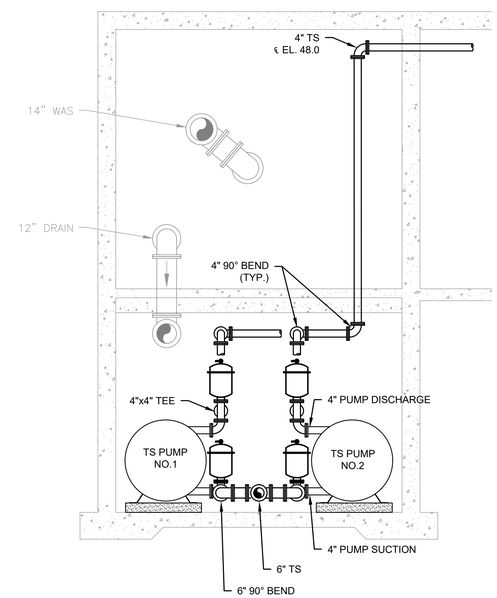

SECTION 3 (M-7.3)

SCALE: 1/4"= 1'-0"

PREPARED BY

BETA
www.BETA-Inc.com

REGISTERED PROFESSIONAL

SUBCONSULTANT

PROJECT

Taunton Wastewater Treatment Facility Improvements

Taunton, MA

TITLE

Solids Handling Building Plans & Sections

NO.	REVISIONS	DATE

DRAWN BY:	BM
DESIGNED BY:	BM
CHECKED BY:	--
ISSUE DATE:	5/15/2020
BETA JOB NO.:	6050

SCALE

AS SHOWN

UNLESS OTHERWISE NOTED OR CHANGED BY REPRODUCTION

Not for Construction

SHEET NO.

M-7.6

5/19/2020 10:54 AM J:\TAUNTON\WWTF DESIGN\AUTOCAD\PLAN SET\SOLIDS HANDLING\SOLIDS HANDLING BUILDING & TANKS - PROP. PLANS & SECTIONS.DWG (BETA STD BW.CTB)

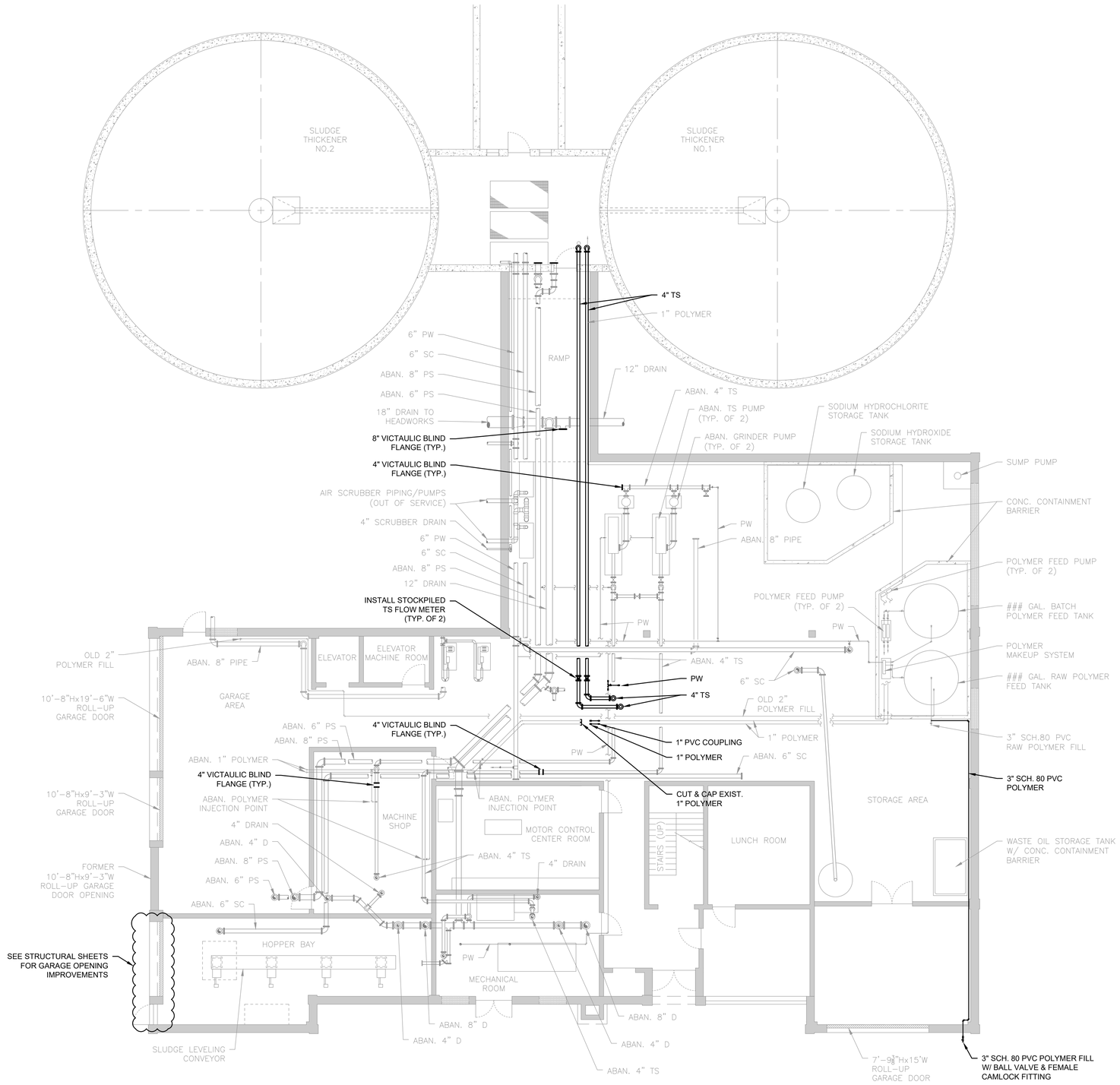

FIRST FLOOR - PLAN

SCALE: 1/8"= 1'-0"

PREPARED BY

BETA
www.BETA-Inc.com

REGISTERED PROFESSIONAL

SUBCONSULTANT

PROJECT

Taunton Wastewater Treatment Facility Improvements

Taunton, MA

TITLE

Solids Handling Building First Floor Plan

NO.	REVISIONS	DATE

DRAWN BY:	BM
DESIGNED BY:	BM
CHECKED BY:	--
ISSUE DATE:	5/15/2020
BETA JOB NO.:	6050

SCALE

AS SHOWN

UNLESS OTHERWISE NOTED OR CHANGED BY REPRODUCTION

Not for Construction

SHEET NO.

M-7.7

5/19/2020 10:55 AM J:\TAUNTON\WWTF DESIGN\AUTOCAD\PLAN SETS\SOLIDS HANDLING\SOLIDS HANDLING BUILDING & TANKS - PROP. PLANS & SECTIONS.DWG (BETA STD BW.CTB)

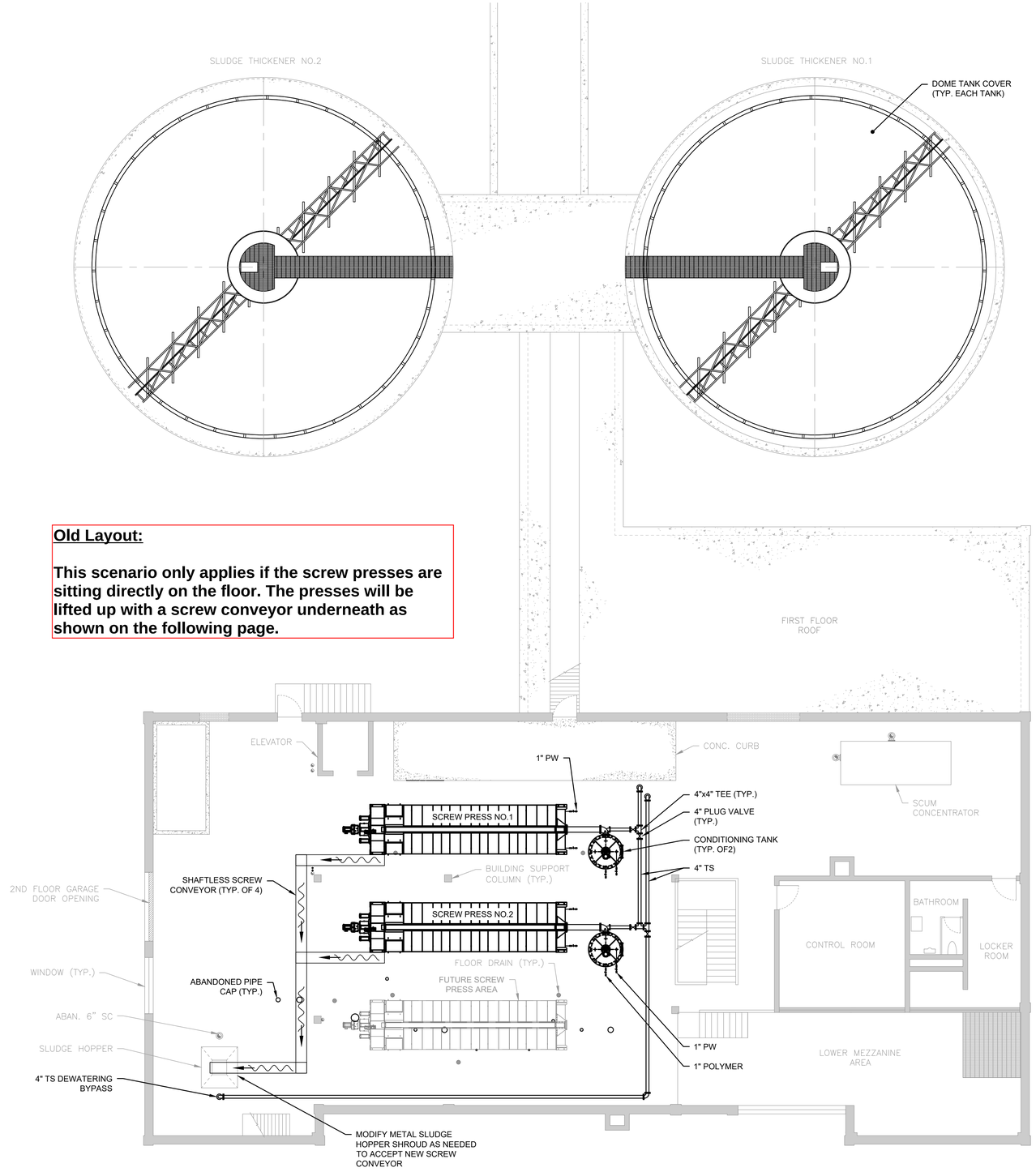

Old Layout:

This scenario only applies if the screw presses are sitting directly on the floor. The presses will be lifted up with a screw conveyor underneath as shown on the following page.

SECOND FLOOR - PLAN (EL. 65.0)

SCALE: 1/8"= 1'-0"

PREPARED BY

BETA
www.BETA-Inc.com

REGISTERED PROFESSIONAL

SUBCONSULTANT

PROJECT

Taunton Wastewater Treatment Facility Improvements

Taunton, MA

TITLE

Solids Handling Building Second Floor Plan

NO.	REVISIONS	DATE

DRAWN BY:	BM
DESIGNED BY:	BM
CHECKED BY:	--
ISSUE DATE:	5/15/2020
BETA JOB NO.:	6050

SCALE

AS SHOWN

UNLESS OTHERWISE NOTED OR CHANGED BY REPRODUCTION

Not for Construction

SHEET NO.

M-7.8

5/19/2020 10:55 AM J:\TAUNTON\WWTF DESIGN\AUTOCAD\PLAN SETS\SOLIDS HANDLING\SOLIDS HANDLING BUILDING & TANKS - PROP. PLANS & SECTIONS.DWG (BETA STD BW.CTB)

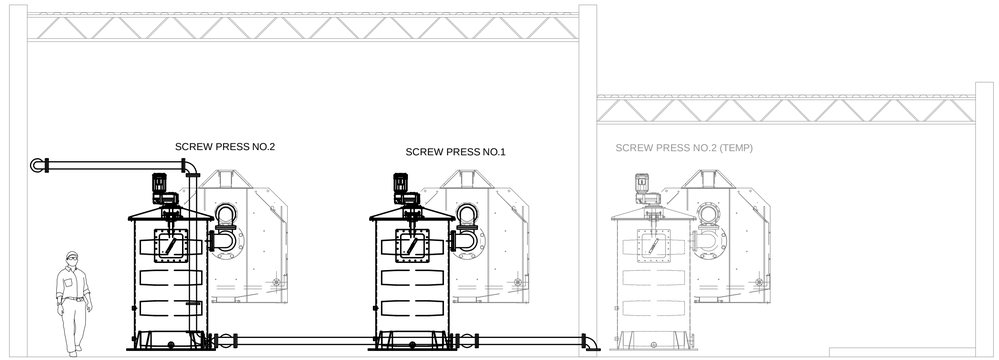

SECTION 1
SCALE: 1/4"= 1'-0"

- SAVES MORE SPACE THAN ANY ALTERNATIVE
- FEWER & SHORTER SCREW CONVEYORS
- PRESSES WILL BE ELEVATED ON CONCRETE PIERS

SEQUENCE:

1. INSTALL SCREW PRESS NO.2 IN TEMP LOCATION.
2. DEMO CENTRIFUGES
3. INSTALL SCREW PRESS NO.1
4. MOVE PRESS NO.2 TO PROPOSED LOCATION

QUESTIONS:

1. HOW WOULD WE HANDLE DEWATERED SLUDGE DURING THIS?
2. HOW LONG CAN VEOLIA SEND OUT LIQUID SLUDGE WHILE THESE ARE INSTALLED?

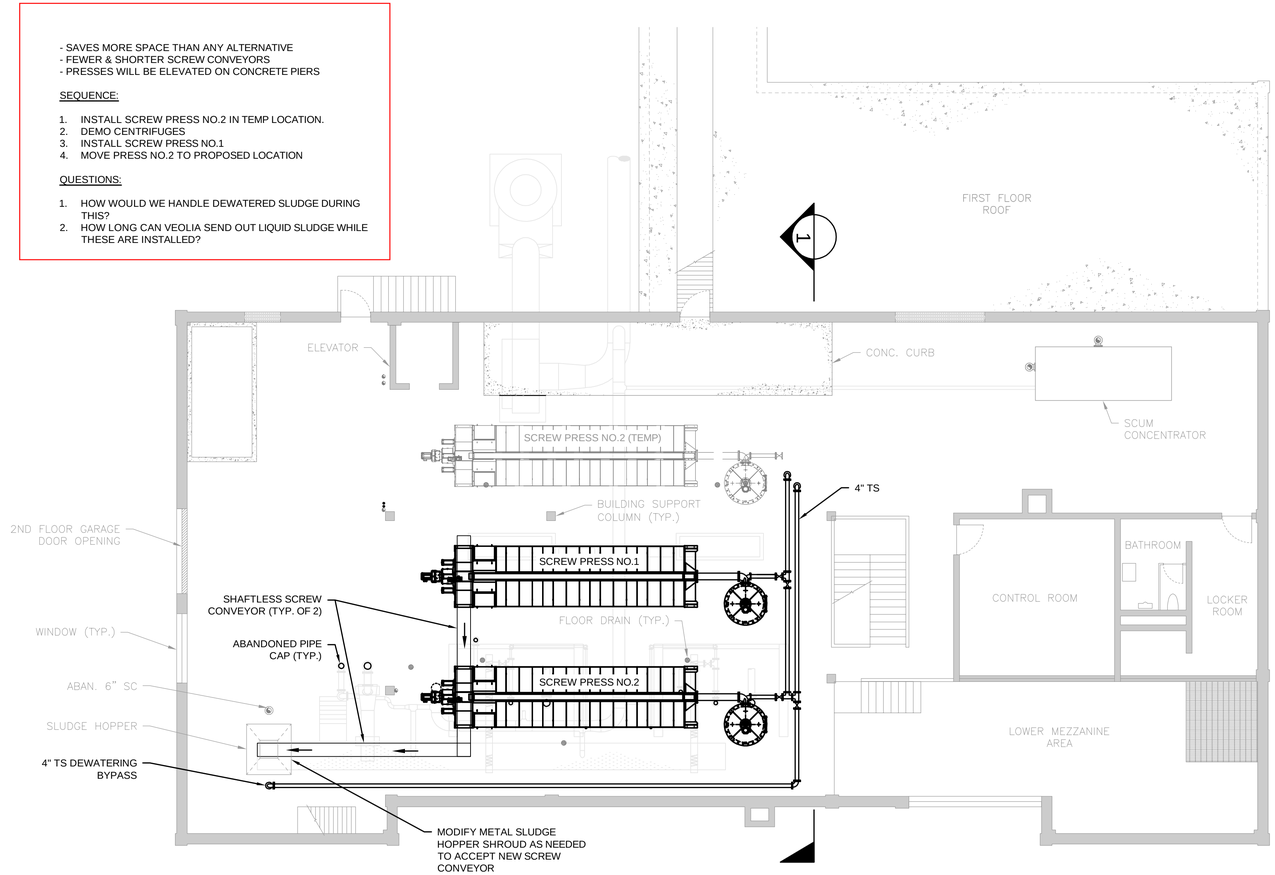

SECOND FLOOR - PLAN
SCALE: 1/8"= 1'-0"

PREPARED BY

BETA
www.BETA-Inc.com

REGISTERED PROFESSIONAL

NOT FOR CONSTRUCTION (CONCEPTUAL)

SUBCONSULTANT

PROJECT

Taunton Wastewater Treatment Facility Improvements

Taunton, MA

TITLE

Solids Handling Building Second Floor Plan

NO.	REVISIONS	DATE

DRAWN BY:	BM
DESIGNED BY:	BM
CHECKED BY:	--
ISSUE DATE:	2/28/2020
BETA JOB NO.:	6050

SCALE

AS SHOWN

UNLESS OTHERWISE NOTED OR CHANGED BY REPRODUCTION

Not for Construction

SHEET NO.

M-7.8

5/28/2020 8:31 AM J:\TAUNTON\WWTF DESIGN\AUTOCAD\PLAN SET\SOLIDS HANDLING\SOLIDS HANDLING BUILDING & TANKS - PROP. PLANS & SECTIONS.DWG (BETA-STB BW.STB)

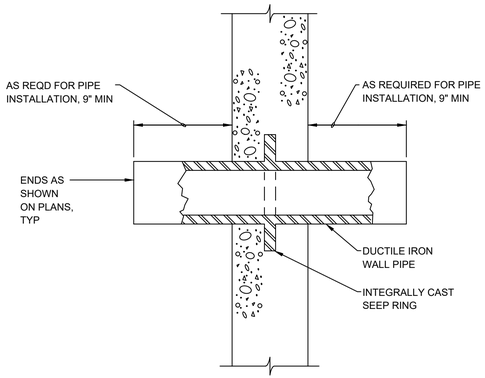

PExPE DUCTILE IRON WALL PIPE (401)

SCALE: NOT TO SCALE

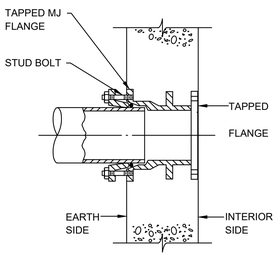

MJxFLUSH FLG D.I. WALL PIPE (402)

SCALE: NOT TO SCALE

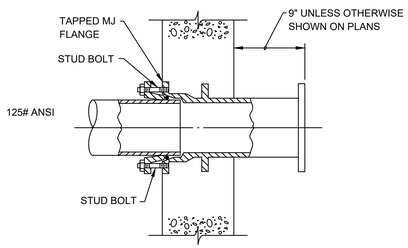

MJxFLG D.I. WALL PIPE (403)

SCALE: NOT TO SCALE

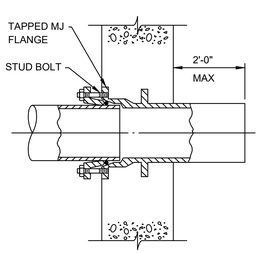

MJxPE D.I. WALL PIPE (404)

SCALE: NOT TO SCALE

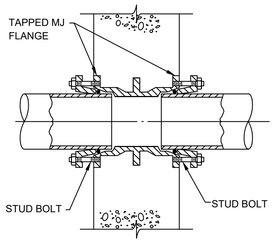

MJxMJ D.I. WALL PIPE (405)

SCALE: NOT TO SCALE

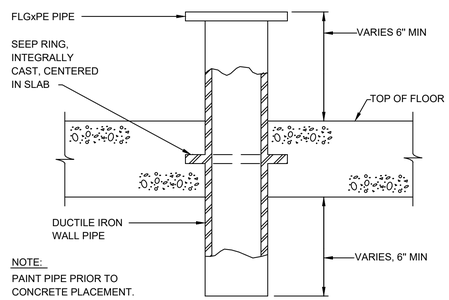

NOTE:
PAINT PIPE PRIOR TO CONCRETE PLACEMENT.

FLGxPE FLOOR PIPE (406)

SCALE: NOT TO SCALE

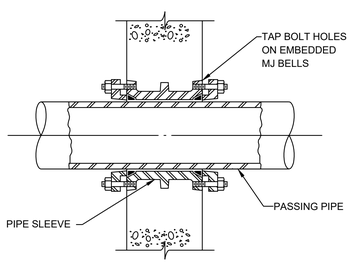

MJxMJ PIPE SLEEVE (407)

SCALE: NOT TO SCALE

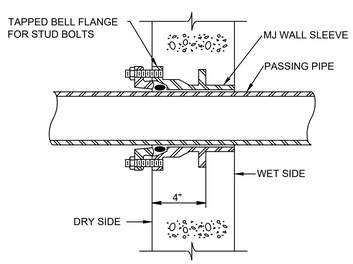

MJxPE WALL SLEEVE (408)

SCALE: NOT TO SCALE

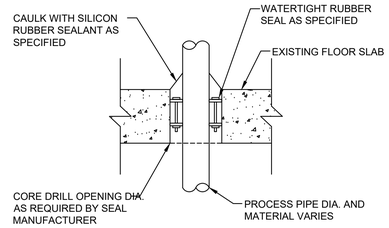

FLOOR PENETRATION FOR CORED HOLES IN WET AREAS (409)

SCALE: NOT TO SCALE

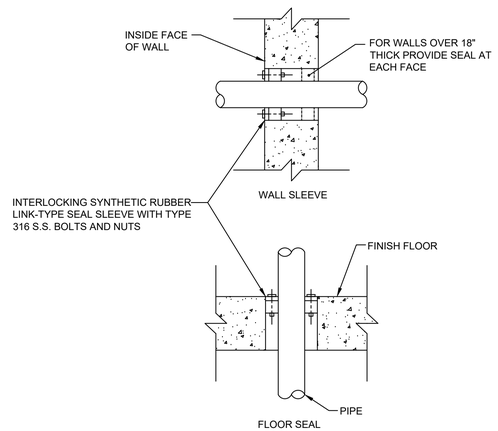

PENETRATION FOR CORED HOLES IN EXISTING WALLS AND DRY AREAS (410)

SCALE: NOT TO SCALE

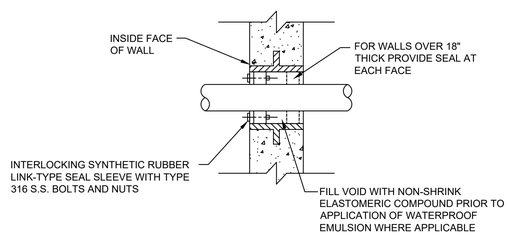

WALL SLEEVE/NEW CONCRETE (411)

SCALE: NOT TO SCALE

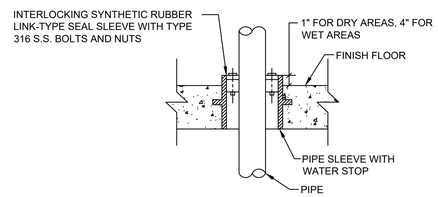

NOTE: FOR FLOOR SLEEVES, WHERE GASTIGHT OR WATERTIGHT SEALS ARE NOT REQUIRED, THE SEAL MAY BE OMITTED

FLOOR SLEEVE/NEW CONCRETE (412)

SCALE: NOT TO SCALE

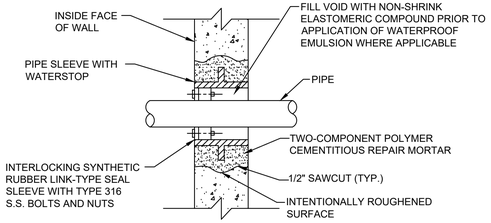

WALL SLEEVE/EXISTING WALL (413)

SCALE: NOT TO SCALE

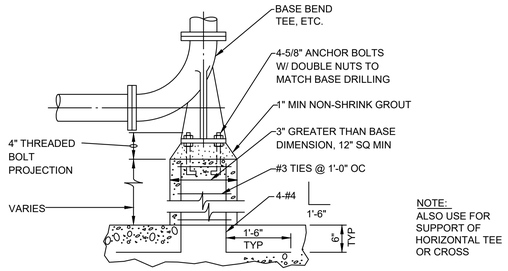

NOTE:
ALSO USE FOR SUPPORT OF HORIZONTAL TEE OR CROSS

BASE BEND (414)

SCALE: NOT TO SCALE

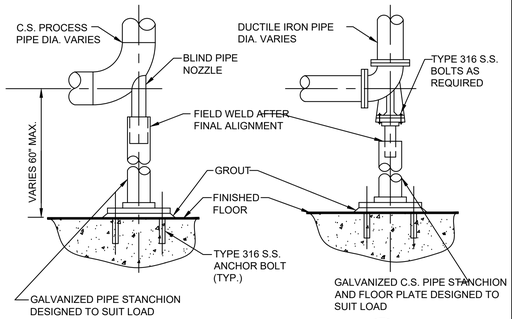

FLOOR PIPE SADDLE (415)

SCALE: NOT TO SCALE

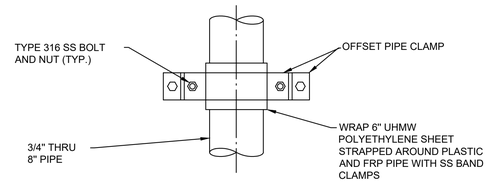

PLAN

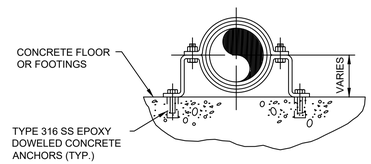

SECTION

GRINNELL FIGURE 103 OR EQUAL

PIPE SUPPORT (416)

SCALE: NOT TO SCALE

PREPARED BY

BETA
www.BETA-Inc.com

REGISTERED PROFESSIONAL

NOT FOR CONSTRUCTION (CONCEPTUAL)

SUBCONSULTANT

PROJECT

Taunton Wastewater Treatment Facility Improvements

Taunton, MA

TITLE

Mechanical Details I

NO.	REVISIONS	DATE

DRAWN BY:	BM
DESIGNED BY:	BM
CHECKED BY:	--
ISSUE DATE:	5/15/2020
BETA JOB NO.:	6050

SCALE

AS SHOWN

UNLESS OTHERWISE NOTED OR CHANGED BY REPRODUCTION

Not for Construction

SHEET NO.

MD-1

5/19/2020 10:55 AM J:\TAUNTON\WWTF DESIGN\AUTOCAD\PLAN SET\SOLIDS HANDLING\MECHANICAL DETAILS.DWG (BETA STD BW.CTB)

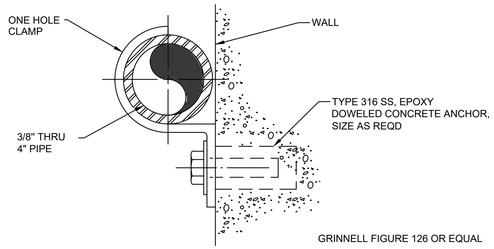

PIPE SUPPORT (417)
SCALE: NOT TO SCALE

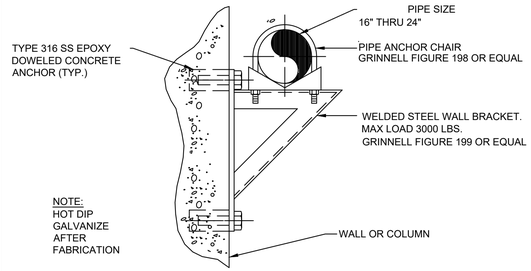

PIPE SUPPORT–HEAVY (421)
SCALE: NOT TO SCALE

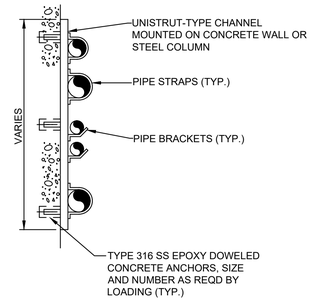

STACKED PIPE WALL SYSTEM (425)
SCALE: NOT TO SCALE

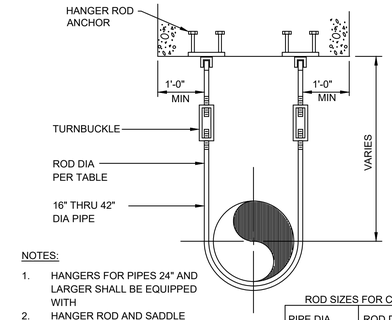

NOTES:
1. HANGERS FOR PIPES 24" AND LARGER SHALL BE EQUIPPED WITH
2. HANGER ROD AND SADDLE MATERIAL TO BE STAINLESS STEEL FOR STAINLESS STEAL PIPE
3. SPACE HANGERS 12'-0" ON CENTER MAXIMUM.

ROD SIZES FOR CLDI

PIPE DIA	ROD DIA
12" THRU 16"	
18" AND 20"	
24"	

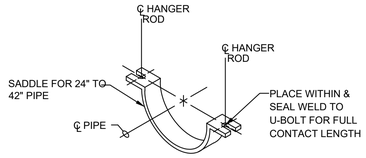

PIPE HANGER (429)
SCALE: NOT TO SCALE

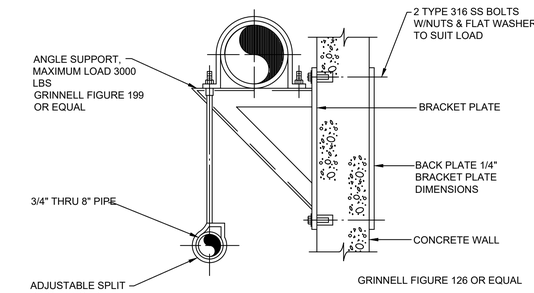

PIPE SUPPORT (418)
SCALE: NOT TO SCALE

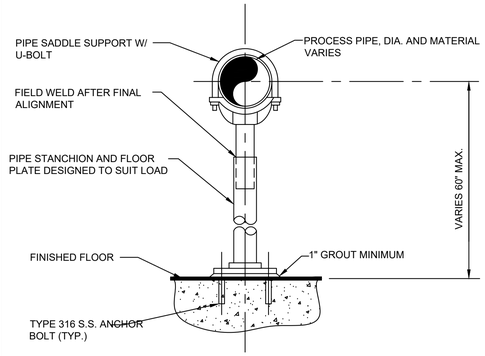

NOTES: 1. PROVIDE HALF-ROUND RIGID INSULATION WAND INSULATION SHIELD FOR INSULATED PIPING.

2. PROVIDE NEOPRENE ISOLATION PAD UNDER SUPPORT FOOT FOR ISOLATED PIPING OR WHEN SUPPORT IS ADJACENT TO MECHANICAL EQUIPMENT.

GRINNELL FIGURE 259 OR EQUAL

FLOOR PIPE SUPPORT (422)
SCALE: NOT TO SCALE

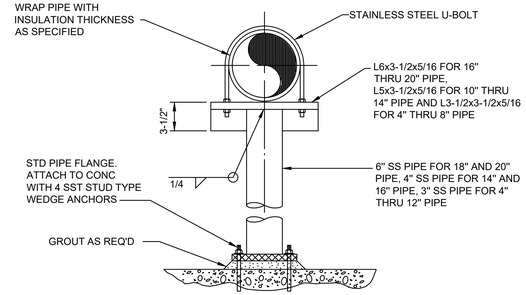

S.S. PIPE SUPPORT (SUBMERGED) (426)
SCALE: NOT TO SCALE

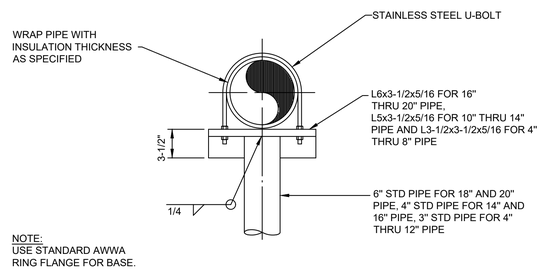

PIPE SUPPORT (419)
SCALE: NOT TO SCALE

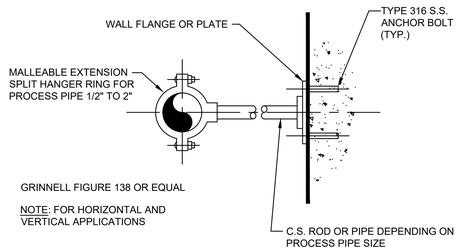

WALL PIPE SUPPORT (423)
SCALE: NOT TO SCALE

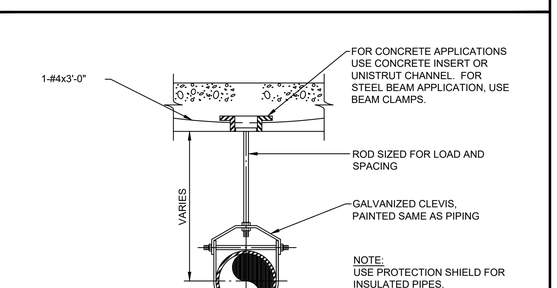

PIPE HANGER (427)
SCALE: NOT TO SCALE

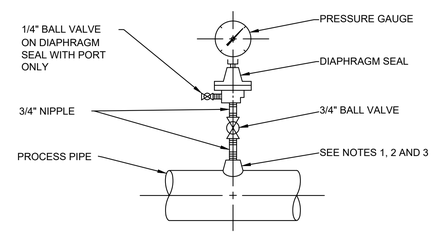

DIAPHRAGM PRESSURE GAUGE

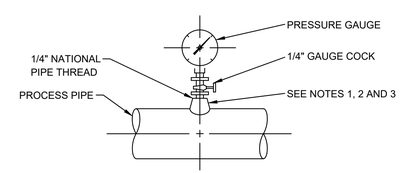

PRESSURE GAUGE

NOTES:
1. FOR STEEL, GALVANIZED STEEL, AND PVC 2 1/2" AND SMALLER USE A BUSHING IN A TEE.
2. FOR DUCTILE IRON AND FIBERGLASS REINFORCED PLASTIC PIPE, ALL SIZES, USE PIPE SADDLE WITH BUSHING.
3. FOR STEEL AND STAINLESS STEEL PIPES 3" AND LARGER, AND PRESSURE VESSELS, USE THRED-O-LET AS SHOWN.
4. PROVIDE SNUBBER FOR POSITIVE DISPLACEMENT PUMP INSTALLATIONS.

PRESSURE GAUGE MOUNTING DETAILS (430)
SCALE: NOT TO SCALE

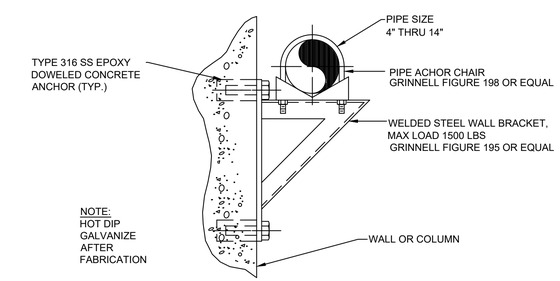

PIPE SUPPORT–MEDIUM (420)
SCALE: NOT TO SCALE

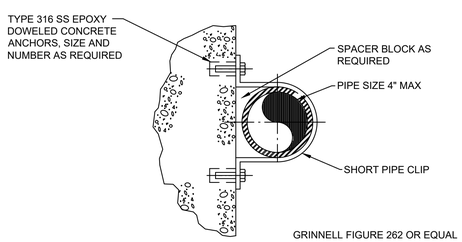

VERTICAL PIPE SUPPORT (424)
SCALE: NOT TO SCALE

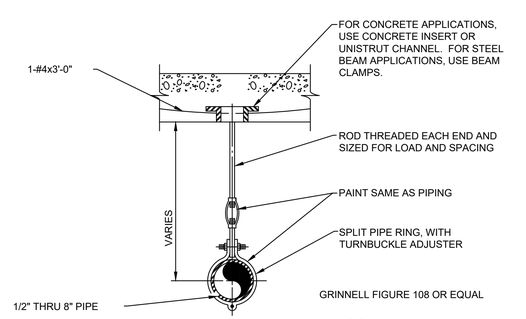

PIPE HANGER (428)
SCALE: NOT TO SCALE

PREPARED BY

BETA
www.BETA-Inc.com

REGISTERED PROFESSIONAL

NOT FOR CONSTRUCTION (CONCEPTUAL)

SUBCONSULTANT

PROJECT

Taunton Wastewater Treatment Facility Improvements

Taunton, MA

TITLE

Mechanical Details II

NO.	REVISIONS	DATE

DRAWN BY:	BM
DESIGNED BY:	BM
CHECKED BY:	--
ISSUE DATE:	5/15/2020
BETA JOB NO.:	6050

SCALE

AS SHOWN

UNLESS OTHERWISE NOTED OR CHANGED BY REPRODUCTION

Not for Construction

SHEET NO.

MD-2

5/19/2020 10:55 AM J:\TAUNTON\WWTF DESIGN\AUTOCAD\PLAN SET\SOLIDS HANDLING\MECHANICAL DETAILS.DWG (BETA STD BW.CTB)

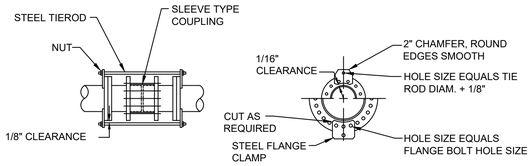

NOTE: TIERODS SHALL BE EQUALLY SPACED AROUND PIPE.

	TIERODS		FLANGE CLAMP			
PIPE SIZE	NO.	DIA.	THICKNESS	NO. OF FLANGE BOLTS PER CLAMP	"A"	"B"
6"	2	1/2"	1/2"	2	2"	7-3/4"
8"	2	5/8"	1/2"	2	2"	8-5/8"
10"	2	3/4"	1/2"	2	2"	7-3/4"
12"	2	1"	1/2"	2	2"	8-1/2"
14"	2	1-1/8"	3/4"	2	2"	9"
16"	2	1-1/4"	7/8"	2	2"	12-1/4"
18"	2	1-3/8"	7/8"	3	2-1/2"	13"
20"	2	1-3/8"	1"	3	2-1/2"	8"
24"	3	1-3/8"	1"	2	2-1/2"	8-3/4"
30"	4	1-3/4"	1"	2	2-1/2"	12-1/4"
36"	4	1-3/4"	1-1/4"	3	2-1/2"	8-1/2"
42"	6	1-3/4"	1-1/4"	2	2-1/2"	12-3/4"
48"	6	1-3/4"	1-1/4"	3	2-1/2"	12-1/2"
	8			3		

SLEEVE COUPLING RESTRAINT (150 PSI FLANGE CLAMP ASSEMBLY) 432

SCALE: NOT TO SCALE

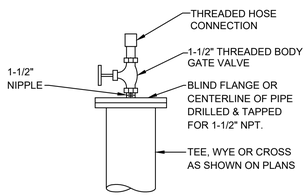

FLUSHING CONNECTION 435

SCALE: NOT TO SCALE

PREPARED BY

BETA
www.BETA-Inc.com

REGISTERED PROFESSIONAL

NOT FOR CONSTRUCTION (CONCEPTUAL)

SUBCONSULTANT

PROJECT

Taunton Wastewater Treatment Facility Improvements

Taunton, MA

TITLE

Mechanical Details III

NO.	REVISIONS	DATE

DRAWN BY:	BM
DESIGNED BY:	BM
CHECKED BY:	--
ISSUE DATE:	5/15/2020
BETA JOB NO.:	6050

SCALE

AS SHOWN

UNLESS OTHERWISE NOTED OR CHANGED BY REPRODUCTION

Not for Construction

SHEET NO.

MD-3

5/19/2020 10:56 AM J:\TAUNTON\WWTF DESIGN\AUTOCAD\PLAN SET\SOLIDS HANDLING\MECHANICAL DETAILS.DWG (BETA STD B\W.CTB)

GENERAL NOTES

1. HVAC WORK IS INDICATED DIAGRAMMATICALLY. EXACT LOCATIONS OF ALL COMPONENTS ARE TO BE DETERMINED IN THE FIELD AND BY THE ACTUAL BUILDING CONDITIONS. EXISTING DUCTS, PIPING OR EQUIPMENT INTERFERING WITH OTHER INSTALLATIONS SHALL BE RELOCATED AS REQUIRED AT NO ADDITIONAL COST TO THE OWNER. EXACT LOCATIONS MUST HAVE THE APPROVAL OF THE ARCHITECT.
2. ALL WORK SHALL BE COORDINATED WITH ALL OTHER TRADES BEFORE ANY INSTALLATION IS MADE.
3. ALL EQUIPMENT SHALL BE INSTALLED IN ACCORDANCE WITH STATE CODES, MANUFACTURER'S APPROVED PUBLISHED LITERATURE, AND AUTHORITIES HAVING JURISDICTION.
4. INSTALLATION OF EQUIPMENT SHALL PERMIT ACCESSIBILITY FOR SERVICE AND/ OR REPLACEMENT.
5. ALL CEILING MOUNTED EQUIPMENT SHALL BE INSTALLED IN SUCH A WAY THAT LIGHTS, PIPING, AND DUCTWORK DO NOT BLOCK ACCESS TO UNITS AND RELATED ACCESSORIES.
6. HVAC CONTRACTOR SHALL COORDINATE ALL WALL, CEILING, FLOOR, ROOF AND BEAM PENETRATIONS WITH ARCHITECT AND STRUCTURAL ENGINEER.
7. ALL DUCT SIZES SHOWN ARE NET INSIDE CLEAR DIMENSIONS.
8. PROVIDE VOLUME DAMPERS AT EVERY MAIN BRANCH TAKE-OFF AND AS INDICATED AND IN SUCH OTHER LOCATIONS WHERE REQUIRED TO PROPERLY BALANCE THE SYSTEM. DO NOT INSTALL VOLUME DAMPERS IN NECKS OF DIFFUSERS OR AT DISCHARGE OR INLET GRILLES IN DUCTWORK.
9. PROVIDE INSTRUMENT TEST HOLES WITH CAPS IN AIR DISTRIBUTION SYSTEMS AS REQUIRED TO BALANCE SYSTEM.
10. HVAC CONTRACTOR SHALL BE RESPONSIBLE FOR ALL SHEETMETAL TRANSITIONS AT AIR TERMINAL UNITS, FANS, COILS, AND OTHER SIMILAR HVAC EQUIPMENT.
11. ALL OPEN ENDED DUCTS IN THE CEILING PLENUM SHALL BE UNOBSTRUCTED FOR A MINIMUM DISTANCE OF 24" FROM THE OPENING TO ALLOW FREE AIR FLOW AND SHALL HAVE 3/4" WIRE MESH SCREENING.
12. ALL TRANSFER DUCTS SHALL BE INTERNALLY LINED.
13. ALL MISCELLANEOUS STRUCTURAL SUPPORTS REQUIRED FOR HVAC EQUIPMENT INSTALLATION SHALL BE PROVIDED BY HVAC SUBCONTRACTOR.
14. EXACT LOCATION OF CEILING DIFFUSERS, GRILLES AND REGISTERS TO BE DETERMINED BY ARCHITECTURAL REFLECTED CEILING PLAN.
15. INSTALL ALL PIPING BELOW DUCTWORK UNLESS CLEARANCE CONDITION REQUIRES PIPING TO BE ABOVE.
16. EXACT ELEVATION FOR SIDE WALL DIFFUSERS, REGISTERS AND GRILLES SHALL BE APPROVED BY THE ARCHITECT BEFORE INSTALLATION.
17. UNLESS OTHERWISE NOTED, ALL PIPING RUNOUTS SHALL BE 3/4"
18. ALL EXPOSED EQUIPMENT (REGISTERS, UNIT HEATERS, ETC..) SHALL HAVE COLORS SELECTED BY THE ARCHITECT, UNLESS NOTED OTHERWISE.
19. HVAC SUBCONTRACTOR SHALL BLANK OFF AND INSULATE ALL UNUSED LOUVER AREA.
20. PITCH AIR INTAKE PLENUMS AND PROVIDE DRAIN TO NEAREST FLOOR DRAIN.
21. ALL REGISTERS, GRILLES AND DIFFUSERS LOCATED IN WALLS NEAR FLOOR SHALL BE HEAVY-DUTY TYPE DESIGNED TO WITHSTAND RUGGED IMPACT. REFER TO SCHEDULE. THE SECTION OF DUCTWORK BEHIND THE AIR DEVICE SHALL BE PAINTED FLAT BLACK.
22. EXACT LOCATION OF THERMOSTAT TO BE COORDINATED WITH FINAL LOCATION OF WALL MOUNTED ARCHITECTURAL AND ELECTRICAL EQUIPMENT.
23. ALL MAIN BRANCH PIPES FROM RISERS SHALL HAVE ISOLATION VALVES NEAR SHAFTS. PROVIDE SHUT-OFF VALVES AT EACH SUPPLY BRANCH AND COMBINATION BALANCING SHUT-OFF VALVE AT EACH RETURN BRANCH.
24. PROVIDE FLEXIBLE CONNECTOR ON INTAKES AND DISCHARGES OF ALL AIR HANDLING UNITS.
25. REFRIGERATION PIPING SIZED BY UNIT MANUFACTURER. SUBMIT CALCULATIONS TO ENGINEER FOR APPROVAL.
26. DUCT MOUNTED SMOKE DETECTOR – FURNISHED AND WIRED BY THE ELECTRICAL CONTRACTOR, INSTALLED BY THE HVAC CONTRACTOR.
27. ROOF OPENINGS SHALL BE SIZED FROM APPROVED SHOP DRAWINGS.
28. ALL FLOOR MOUNTED MECHANICAL EQUIPMENT, BOILERS, PUMPS, AIR HANDLERS, ETC. SHALL HAVE A CONCRETE PAD 4" HIGH AND 6" BEYOND EQUIPMENT FOOT PRINT ON ALL FOUR SIDES. CONCRETE PADS SHALL BE SIZE FROM APPROVED SHOP DRAWINGS.
29. ALL DAMPER MOTORS SHALL BE 24 VOLT.
30. PROVIDE DUCT MOUNTED SMOKE DAMPERS AT ALL SMOKE BARRIERS, REFER TO ARCH. DRAWINGS FOR LOCATION. SMOKE DAMPERS SHALL BE CLOSED AND ASSOCIATED EXH. FAN OR AHU SHALL BE SHUT-DOWN UPON DETECTION OF SMOKE AS SENSED BY AREA SMOKE DETECTORS. DAMPERS SHALL BE RUSKIN TYPE SD 60 OR EQUAL.

DEMOLITION NOTES

1. EXISTING WORK INDICATED TO BE DEMOLISHED SHALL BE REMOVED AND DISPOSED OF.
2. DEMOLITION

ABBREVIATIONS

ACD	AUTOMATIC CONTROL DAMPER
AD	ACCESS DOOR
AFF	ABOVE FINISHED FLOOR
AHAP	AS HIGH AS POSSIBLE
AP	ACCESS PANEL
ARCH	ARCHITECT
ATC	AUTOMATIC TEMPERATURE CONTROL
BDD	BACKDRAFT DAMPER
BTU	BRITISH THERMAL UNIT
BTUH	BRITISH THERMAL UNIT PER HOUR
BOD	BOTTOM OF DUCT
CAP	CAPACITY
CD	CEILING DIFFUSER
CFM	CUBIC FEET PER MINUTE
CO	CLEANOUT
CONT	CONTROLLER
CP	CUT AND CAP
DIA	DIAMETER
DB	DRY BULB TEMPERATURE
DC	DUST COLLECTOR
DDC	DIRECT DIGITAL CONTROL
DN	DOWN
DWG	DRAWING
DX	DIRECT EXPANSION COOLING
EA	EXHAUST AIR
EAT	ENTERING AIR TEMPERATURE
EBB	ELECTRIC BASEBOARD RADIATION
ECH	ELECTRIC CABINET HEATER
ECON	AIR-SIDE ECONOMIZER
EF	EXHAUST FAN
EFF	EFFICIENCY
ELV	ELEVATION
ER	EXHAUST REGISTER
ESP	EXTERNAL STATIC PRESSURE
ETR	EXISTING TO REMAIN
EWT	ENTERING WATER TEMPERATURE
EXH	EXHAUST
FA	FREE AREA
FD	FIRE DAMPER
FLA	FULL LOAD AMPS
FOB	FLAT ON BOTTOM
FOT	FLAT ON TOP
FPI	FINS PER INCH
FPM	FEET PER MINUTE
FT	FEET
FTR	FINNED TUBE RADIATION
GAL	GALLONS
GALV	GALVANIZED
GC	GENERAL CONTRACTOR
GF	GLYCOL FEED
GPM	GALLONS PER MINUTE
HP	HORSEPOWER
HVAC	HEATING, VENTILATING AND AIR CONDITIONING
HGRH	HOT GAS REHEAT
HW	HOT WATER
HZ	HERTZ
IN	INCHES
KE	KITCHEN EXHAUST
KW	KILOWATTS
LAT	LEAVING AIR TEMPERATURE
LD	LINEAR DIFFUSER
LF	LINEAR FEET
LWT	LEAVING WATER TEMPERATURE
MBH	THOUSANDS OF BTU'S PER HOUR
MCC	MOTOR CONTROL CENTER
NC	NORMALLY CLOSED
NIC	NOT IN CONTRACT
NO	NORMALLY OPEN
NTS	NOT TO SCALE
OA	OUTSIDE AIR
OAT	OUTSIDE AIR TEMPERATURE
OBD	OPPOSED BLADE DAMPER
OD	OUTSIDE DIAMETER
OED	OPEN ENDED DUCT
POS	PROVIDED UNDER OTHER SECTIONS
PSI	POUNDS PER SQUARE INCH (GAUGE)
PD	PRESSURE DROP
PRV	PRESSURE REDUCING VALVE
PG	PROPYLENE GLYCOL
R	RETURN
RA	RETURN AIR
RB	REBALANCE
RF	RETURN/EXHAUST FAN
RG	RETURN GRILLE
RM	ROOM
RPM	REVOLUTIONS PER MINUTE
RR	RETURN REGISTER
S	SUPPLY
SA	SUPPLY AIR
SAT	SUPPLY AIR TEMPERATURE
SF	SQUARE FEET, SUPPLY FAN
SP	STATIC PRESSURE
SR	SUPPLY REGISTER
SS	STAINLESS STEEL
STL	STEEL
TYP	TYPICAL
UC	UNDERCUT DOOR
V	VOLTS
VAV	VARIABLE AIR VOLUME
VD	VOLUME DAMPER
VFD	VARIABLE FREQUENCY DRIVE
W/	WITH
W/O	WITHOUT
WB	WET BULB TEMPERATURE
WG	WATER GAUGE
WMS	WIRE MESH SCREEN

PIPING LEGEND

CD	CONDENSATE DRAIN
HWS	HOT WATER SUPPLY
HWR	HOT WATER RETURN
RL	REFRIGERANT LIQUID
RS	REFRIGERANT SUCTION

EQUIPMENT TAG SYMBOLS & ABBREVIATIONS

EQUIPMENT NOT REQUIRING ELECTRIC SERVICE — TAG NO — SEE SCHEDULE FOR PERFORMANCE REQUIREMENTS — TAG NO — EQUIPMENT REQUIRING ELECTRIC SERVICE

FTR-1 / MBH / LENGTH	FINNED TUBE RADIATION
ACCU	AIR COOLED CONDENSING UNIT
AHU	AIR HANDLING UNIT
AF	AIR FILTER
AS	AIR SEPARATOR
B	BOILER
CC	COOLING COIL
CH	CHILLER
CUH	CABINET UNIT HEATER
C	CONVECTOR
EF	EXHAUST FAN
ERV	ENERGY RECOVERY VENTILATOR
ET	EXPANSION TANK
EUH	ELECTRIC UNIT HEATER
FCU	FAN COIL UNIT
FMS	FLOW MEASURING STATION
FTR	FIN-TUBE RADIATION
HC	HEATING COIL
HP	HEAT PUMP
HRU	HEAT RECOVERY UNIT
HV	HEATING AND VENTILATING UNIT
IRV	INTAKE ROOF VENT
MAU	MAKEUP AIR UNIT
P	PUMP
REF	RETURN/EXHAUST FAN
RF	RETURN FAN
RTU	ROOFTOP UNIT
SA	SOUND ATTENUATOR
SF	SUPPLY FAN
TU	TERMINAL UNIT
UH	UNIT HEATER
UV	UNIT VENTILATOR
VAV	VARIABLE AIR VOLUME UNIT
RB / 2000	REBALANCE EXISTING CFM TO INDICATED AMOUNTED

INSTRUMENTATION

PI	LOCAL PRESSURE GAUGE W/SHUTOFF AND SNUBBER
DPI	DIFFERENTIAL PRESSURE GAUGE W/SHUTOFFS AND SNUBBERS
TI	LOCAL TEMPERATURE INDICATION
Th	HEATING ONLY THERMOSTAT
Tc	COOLING ONLY THERMOSTAT
T	HEATING/COOLING THERMOSTAT
TT	TEMPERATURE TRANSMITTER
PT	PRESSURE TRANSMITTER
SD	SMOKE DETECTOR
HD	HEAT DETECTOR
FT	FLOW TRANSMITTER
SP	STATIC PRESSURE SENSOR
H	HUMIDITY SENSOR OR HUMIDISTAT
CO2	CARBON DIOXIDE DETECTOR
CO	CARBON MONOXIDE DETECTOR
OS	OCCUPANCY SENSOR
PS	PRESSURE SENSOR SWITCH

VALVES AND ACCESSORIES

GATE VALVE
BALL VALVE
BALL VALVE WITH HOSE BIBB, CAP & CHAIN
BUTTERFLY VALVE
GLOBE VALVE
PRESSURE REDUCING VALVE (SELF-CONTAINED)
BACKPRESSURE REGULATOR (SELF-CONTAINED)
CHECK VALVE (SWING TYPE)
CHECK VALVE (SILENT TYPE)
STRAINER W/BALL VALVE, HOSE BIBB & CAP (GATE VALVE FOR STEAM)
ANGLE VALVE
BUTTERFLY VALVE, TWO POSITION ACTUATOR
BALL VALVE, TWO POSITION ACTUATOR
SOLENOID VALVE
TWO-WAY AUTOMATIC CONTROL VALVE, MODULATING ACTUATOR
TWO-WAY AUTOMATIC CONTROL VALVE, TWO POSITION ACTUATOR
THREE-WAY AUTOMATIC CONTROL VALVE, MODULATING ACTUATOR
THREE-WAY AUTOMATIC CONTROL VALVE, TWO POSITION ACTUATOR
AUTOMATIC FLOW CONTROL VALVE (PRESSURE INDEPENDENT)
COMBINATION FLOWMETER/SHUT OFF/BALANCING VALVE
FLOW SWITCH
FLOW METER
SAFTEY RELIEF VALVE
UNION OR FLANGE (SEE SPEC)
BLIND FLANGE
END CAP
VB — VACUUM BREAKER
PT — PRESSURE/TEMPERATURE WELL
AAV — AUTOMATIC AIR VENT WITH ISOLATION VALVE
MAV — MANUAL AIR VENT
REDUCER (ECCENTRIC-FLAT ON BOTTOM OR FLAT ON TOP)
REDUCER (CONCENTRIC)
FLEXIBLE CONNECTION
EXPANSION JOINT
PIPE GUIDE
ANCHOR
RISE (SINGLE LINE – PLAN VIEW)
DROP (SINGLE LINE – PLAN VIEW)
TOP TAKEOFF
BOTTOM TAKEOFF
PIPE BREAK (SINGLE LINE)
DIRT LEG
CLEAN-OUT FOR CONDENSATE DRAIN
RISE (DOUBLE LINE – PLAN VIEW)
DROP (DOUBLE LINE – PLAN VIEW)
PIPE BREAK (DOUBLE LINE)
DIRECTION OF FLOW IN PIPE
UP — PITCH PIPE UP IN DIRECTION OF FLOW
DN — PITCH PIPE DOWN IN DIRECTION OF FLOW
FINNED TUBE WITH NO ENCLOSURE
FINNED TUBE WITH WITH ENCLOSURE

FLOW DIAGRAM EQUIPMENT SYMBOLS

CENTRIFUGAL PUMP
POSITIVE DISPLACEMENT PUMP
FILTER (WATER SERVICE)
SUCTION DIFFUSER W/STRAINER
C — * H = HEATING COIL; C = COOLING COIL; RH = REHEAT COIL; PH = PREHEAT COIL; DX = DIRECT EXPANSION COIL
ET 1 — EXPANSION TANK
AAV / AS 1 — AIR SEPARATOR

DUCTWORK LEGEND/SYMBOLS

12"x"10 — RECTANGULAR DUCTWORK – FIRST DIMENSION IS SIDE SHOWN (IN.) FREE AREA
12"ø — ROUND DUCT DIAMETER (IN.)
SUPPLY/OUTSIDE AIR DUCTWORK UP
SUPPLY/OUTSIDE AIR DUCTWORK DOWN
RETURN/EXHAUST AIR DUCTWORK UP
RETURN/EXHAUST AIR DUCTWORK DOWN
FLEXIBLE CONNECTION
ACOUSTICALLY LINED DUCTWORK
R — CHANGE OF ELEVATION IN DIRECTION OF AIRFLOW (R)RISE,(D)DROP
12x10 — RECTANGULAR DUCT TRANSITION
12x10 / 8x6 — RECTANGULAR TO SINGLE LINE TRANSITION
12x10 / 10ø — RECTANGULAR TO ROUND TRANSITION
MITERED ELBOW W/ TURNING VANES
SUPPLY AIR DIFFUSER BELOW DUCT
RETURN OR EXHAUST REGISTER BELOW DUCT
ROUND DUCT UP
SUPPLY AIR DIFFUSER (SQUARE OR RECTANGULAR)
SUPPLY AIR DIFFUSER (LINEAR)
RETURN AIR GRILLE OR REGISTER
VD — MANUAL VOLUME DAMPER
FD — SELF-CLOSING FIRE DAMPER W/ACCESS DOOR
SD — SMOKE DAMPER W/ACCESS DOOR
ACD — AUTOMATIC CONTROL DAMPER
SFD — COMBINATION SMOKE/FIRE DAMPER W/ACCESS DOOR
SUPPLY AIR BLOW DIRECTION
EXHAUST / RETURN / OR INTAKE

DIFFUSER/REGESTER TAG
TT-X — TYPE-BLOW (CD-1 = CEILING DIFFUSER)
0000 — CFM
0"x0" — SIZE

INLINE CENTRIFUGAL FAN
ROOF FAN OR VENT
TERMINAL UNIT (COOLING ONLY)
TERMINAL UNIT (HEATING/COOLING)
EXHAUST FAN (SHOWN ON ROOF PLAN)
EXHAUST FAN (SHOWN ON FLOOR PLAN)

SINGLE LINE DUCTWORK

DUCTWORK
SUPPLY/OUTSIDE AIR DUCTWORK UP
SUPPLY/OUTSIDE AIR DUCTWORK DOWN
RETURN/EXHAUST AIR DUCTWORK UP
RETURN/EXHAUST AIR DUCTWORK DOWN
RECTANGULAR DUCTWORK W/ ACOUSTICAL LINING
FLEXIBLE CONNECTION
DUCT TRANSITION
90° TAKE OFF
90° ELBOW
BULLHEAD SPLIT SUPPLY/RETURN

PREPARED BY

BETA
www.BETA-Inc.com

REGISTERED PROFESSIONAL

NOT FOR CONSTRUCTION (CONCEPTUAL)

SUBCONSULTANT

PROJECT

Taunton Wastewater Treatment Facility Improvements

Taunton, MA

TITLE

Hvac Legend and General Notes

NO.	REVISIONS	DATE

DRAWN BY:	RLB
DESIGNED BY:	RHB
CHECKED BY:	RHB
ISSUE DATE:	04/15/2020
BETA JOB NO.:	6050

SCALE

NONE

UNLESS OTHERWISE NOTED OR CHANGED BY REPRODUCTION

For Review Only

SHEET NO.

H-0.1

4/15/2020 12:06 PM W:\YEAR - 2018\18009.00 - TAUNTON WWTF UPGRADES\HVAC DEPARTMENT\18009.00 PHASE 1A HVAC LEGEND SCHEDULE AND DETAILS.DWG (BETA STB BW.STB)

ERV — ENERGY RECOVERY UNIT SCHEDULE (PART 1)

TAG NO.	BUILDING	SUPPLY AIR PERFORMANCE							EXHAUST AIR NORMAL PERFORMANCE						DX COOLING COIL								HEATING COIL									ELECTRICAL DATA					WEIGHT LBS	SUPPLY FILTER	OUTDOOR FILTER	EXHAUST FILTER
		SUPPLY IN CFM	MIN. OA IN CFM	ESP (IN WC)	TSP (IN WC)	FAN RPM	OPERATING POWER HP	MOTOR SIZE HP	EXH./RET. OUT CFM	E.S.P. IN (W.C.)	TOTAL SP IN (W.C.)	FAN RPM	OPERATING POWER HP	MOTOR SIZE HP	REFRIG TYPE	TOTAL MBH	SENSIBLE MBH	ROWS	EAT (DB °F)	EAT (WB °F)	LAT (DB °F)	LAT (WB °F)	CAPACITY (MBH)	GPM	EAT (DB °F)	LAT (DB °F)	EWT (DB °F)	LWT (DB °F)	% GLYCOL	WPD (FT)	APD (IN WC)	MCA	MOCP	V	PHASE	HZ				
7ERV–1	SOLID HANDLING BLDG. 1ST FLOOR	13,500	13,500	1.5	3.76	2265	(2) 7.46	(2) 7.5	13,500	1.5	3.282	2465	(2) 9.39	(2) 10	N/A	N/A	N/A	N/A	N/A	N/A	N/A	N/A	787.9	84.7	46.7	100.6	180	160	40% P.G.	9.4	0.144	48.2	60	480	3	60	5,307	– –	–	–
7ERV–2	SOLID HANDLING BLDG. 1ST FLOOR	11,900	11,900	1.5	3.385	2120	(2) 6.29	(2) 7.5	11,900	1.5	3.006	2252	(2) 7.18	(2) 7.5	N/A	N/A	N/A	N/A	N/A	N/A	N/A	N/A	717.6	77.2	48.8	104.5	180	160	40% P.G.	7.9	0.12	41.9	50	480	3	60	5,259	– –	–	–
7ERV–3	SOLID HANDLING BLDG. 2ND FLOOR	8,800	8,800	1.5	2.7	2197	(2) 3.52	(2) 5	8,800	1.5	2.521	2342	(2) 4.24	(2) 5	N/A	N/A	N/A	N/A	N/A	N/A	N/A	N/A	331.7	35.7	53.1	87.9	180	160	40% P.G.	6.0	0.037	28.7	35	480	3	60	5,089	– –	–	–
7ERV–4	SOLID HANDLING BLDG. 2ND FLOOR	8,800	8,800	1.5	2.7	2197	(2) 3.52	(2) 5	8,800	1.5	2.521	2342	(2) 4.24	(2) 5	N/A	N/A	N/A	N/A	N/A	N/A	N/A	N/A	331.7	35.7	53.1	87.9	180	160	40% P.G.	6.0	0.037	28.7	35	480	3	60	5,089	– –	–	–

ERV — ENERGY RECOVERY UNIT SCHEDULE (PART 2)

TAG NO.	ENERGY RECOVERY WHEEL PERFORMANCE								MANUFACTURER MODEL NUMBER	REMARKS
	WINTER CONDITIONS DESIGN				SUMMER CONDITIONS DESIGN					
	OUTDOOR		INDOOR		OUTDOOR		INDOOR			
	DB °F	WB °F	DB °F	RH%	DB °F	WB °F	DB °F	RH%		
7 ERV–1	7.4	5.3	46.7	50	90.8	76.2	80.7	50	GREENHECK RVE–120–74–30H	1 2 3 4 5 6 7
7 ERV–2	7.4	5.3	48.8	50	90.8	76.2	80.2	50	GREENHECK RVE–120–74–30H	1 2 3 4 5 6 7
7 ERV–3	7.4	5.3	53.1	50	90.8	76.2	79.2	50	GREENHECK RVE–120–74–30H	1 2 3 4 5 6 7
7 ERV–4	7.4	5.3	53.1	50	90.8	76.2	79.2	50	GREENHECK RVE–120–74–30H	1 2 3 4 5 6 7

1 BASE RAILS 2 LOW LEAKAGE DAMPERS 3 RECIRC. DAMPER 4 FACTORY SUPPLY & EXHAUST FAN VFD 5 ENERGY BYPASS WHEEL DAMPER
6 FACTORY MOUNTED DISCONNECT 7 SINGLE POINT POWER CONNECTION

MUA — MAKE-UP AIR UNIT SCHEDULE

TAG NO.	LOCATION	SUPPLY BLOWER					HEATING COIL									ELECTRICAL DATA					SOUND POWER BY OCTAVE BAND											WEIGHT LBS	MANUFACTURER MODEL NUMBER	REMARKS
		OA CFM	TSP (IN WC)	ESP (IN WC)	FAN BHP	FAN HP	CAPACITY (MBH)	GPM	EAT (DB °F)	LAT (DB °F)	EWT (DB °F)	LWT (DB °F)	% GLYCOL	WPD (FT)	APD (IN WC)	FLA	MOP	V	PH	HZ	63 Hz	125 Hz	250 Hz	500 Hz	1000 Hz	2000 Hz	4000 Hz	8000 Hz	LWA	DBA	SONES			
7MUA–1	SOLID HANDLING BLDG. 1ST FLOOR	5,000	1.387	1.25	4.75	5	317.6	32.6	–	–	–	–	40% P.G.	–	–	7.6	20	480	3	60	–	–	–	–	–	–	–	–	–	–	–	–	GREENHECK –	1 2 3

1 BASE TAILS 2 FACTORY MOUNTED DISCONNECT 3 SINGLE POINT POWER CONNECTION

B — BOILER SCHEDULE

TAG NO.	BUILDING	OUTPUT CAPACITY (NET IBR)	FIRING RATE	EFFICIENCY		OPERATING PRESSURE (PSIG)	WATER					ELECTRICAL DATA				WEIGHT (LBS)	MANUFACTURER MODEL NUMBER	REMARKS
		MBH	OIL (GPH)	COMBUSTION	THERMAL		EWT (°F)	LWT (°F)	GPM	% GLYCOL	WPD (FT)	MCA	V	PH	HZ			
7 B–1	SLUDGE HANDLING	2506	20.7	88.4	88.4	–	180	160	300	40% P.G.	–	–	208	1	60	–	BURHAM MPC15	–

P — PUMP SCHEDULE

TAG NO.	BUILDING	SYSTEM SERVED	TYPE	GPM	HEAD (FT.)	GLYCOL	FLUID TEMP °F	RPM	ELECTRICAL DATA				MANUFACTURER MODEL NUMBER	REMARKS
									MOTOR HP	V	PH	HZ		
7HWP–1	SLUDGE HANDLING	H.W.	END	300	60	40% P.G.	180	1725	7.5	480	3	60	TACO 2510C	–
7HWP–2	SLUDGE HANDLING	H.W.	END	300	60	40% P.G.	180	1725	7.5	480	3	60	TACO 2510C	–

ET — EXPANSION TANK SCHEDULE

TAG NO.	BUILDING	SERVICE	SYS TEMP (°F)		SYS PRESS (PSIG)		TANK ACCEPTANCE VOLUME (GAL)	TANK AIR CHARGE (PSIG)	MANUFACTURER MODEL NUMBER	REMARKS
			MIN	MAX	MIN	MAX				
7 ET–1	SLUDGE HANDLING	–	40	75	15	150	–	–	–	–

PREPARED BY

BETA
www.BETA-Inc.com

REGISTERED PROFESSIONAL

NOT FOR CONSTRUCTION (CONCEPTUAL)

SUBCONSULTANT

PROJECT

Taunton Wastewater Treatment Facility Improvements

Taunton, MA

TITLE

Hvac Schedules

NO.	REVISIONS	DATE

DRAWN BY: RLB
DESIGNED BY: RHB
CHECKED BY: RHB
ISSUE DATE: 04/15/2020
BETA JOB NO.: 6050

SCALE

NONE

UNLESS OTHERWISE NOTED OR CHANGED BY REPRODUCTION

For Review Only

SHEET NO.

H-0.2

4/15/2020 12:06 PM W:\YEAR - 2018\18009.00 - TAUNTON WWTF UPGRADES\HVAC DEPARTMENT\18009.00 PHASE 1A HVAC LEGEND SCHEDULE AND DETAILS.DWG (BETA STB BW.STB)

UH HOT WATER UNIT HEATER HEATER SCHEDULE

TAG NO.	SERVICE	CFM	MBH	WATER SIDE					ELECTRICAL DATA					MANUFACTURER MODEL NUMBER	REMARKS
				GPM	% GLYCOL	WPD (FT)	EWT (°F)	LWT (°F)	HP	FLA	V	PH	HZ		
7UH-1	SOLID HANDLING BLDG. 1ST FLOOR	1,120	32.8	3.3	40 P.G.	0.2	180	160	1/10	0.70	120	1	60	RITTLING MODEL RH-63	–
7UH-2	SOLID HANDLING BLDG. 1ST FLOOR	730	23.9	2.4	40 P.G.	0.1	180	160	1/15	0.72	120	1	60	RITTLING MODEL RH-47	–
7UH-3	SOLID HANDLING BLDG. 1ST FLOOR	630	17.3	1.7	40 P.G.	0.1	180	160	1/15	0.72	120	1	60	RITTLING MODEL RH-33	–
7UH-4	SOLID HANDLING BLDG. 1ST FLOOR	630	17.3	1.7	40 P.G.	0.1	180	160	1/15	0.72	120	1	60	RITTLING MODEL RH-33	–
7UH-5	SOLID HANDLING BLDG. 1ST FLOOR	1,550	57.2	5.7	40 P.G.	0.4	180	160	1/8	1.58	120	1	60	RITTLING MODEL RH-108	–
7UH-6	SOLID HANDLING BLDG. 1ST FLOOR	1,550	57.2	5.7	40 P.G.	0.4	180	160	1/8	1.58	120	1	60	RITTLING MODEL RH-108	–
7UH-7	SOLID HANDLING BLDG. 1ST FLOOR	1,550	57.2	5.7	40 P.G.	0.4	180	160	1/8	1.58	120	1	60	RITTLING MODEL RH-108	–
7UH-8	SOLID HANDLING BLDG. 2ND FLOOR	630	17.3	1.7	40 P.G.	0.1	180	160	1/15	0.72	120	1	60	RITTLING MODEL RH-33	–
7UH-9	SOLID HANDLING BLDG. 2ND FLOOR	1,340	43.7	4.4	40 P.G.	0.4	180	160	1/10	1.30	120	1	60	RITTLING MODEL RH-86	–
7UH-10	SOLID HANDLING BLDG. 2ND FLOOR	1,550	57.2	5.7	40 P.G.	0.4	180	160	1/8	1.58	120	1	60	RITTLING MODEL RH-108	–
7UH-11	SOLID HANDLING BLDG. 2ND FLOOR	1,550	57.2	5.7	40 P.G.	0.4	180	160	1/8	1.58	120	1	60	RITTLING MODEL RH-108	–
7UH-12	SOLID HANDLING BLDG. 2ND FLOOR	1,550	57.2	5.7	40 P.G.	0.4	180	160	1/8	1.58	120	1	60	RITTLING MODEL RH-108	–
7UH-13	SOLID HANDLING BLDG. 2ND FLOOR	1,550	57.2	5.7	40 P.G.	0.4	180	160	1/8	1.58	120	1	60	RITTLING MODEL RH-108	–
7UH-14	SOLID HANDLING BLDG. 2ND FLOOR	1,120	32.8	3.3	40 P.G.	0.2	180	160	1/10	0.70	120	1	60	RITTLING MODEL RH-63	–
7UH-15	SOLID HANDLING BLDG. 2ND FLOOR	450	12.2	1.2	40 P.G.	0.4	180	160	1/30	0.70	120	1	60	RITTLING MODEL RH-24	–
7UH-16	SOLID HANDLING BLDG. 2ND FLOOR	1,120	32.8	3.3	40 P.G.	0.2	180	160	1/10	0.70	120	1	60	RITTLING MODEL RH-63	–

CUH HORIZONTAL CABINET UNIT HEATER SCHEDULE

TAG NO.	SERVICE	CFM	MBH	WATER SIDE					ELECTRICAL DATA				MANUFACTURER MODEL NUMBER	REMARKS
				GPM	% GLYCOL	WPD (FT)	EWT (°F)	LWT (°F)	HP	V	PH	HZ		
7CUH-1	SOLID HANDLING BLDG. 1ST FLOOR	300	12.5	1.5	40 P.G.	0.4	130	113.2	1/60	120	1	60	RITTLING MODEL RFRC-420	2 ROW COIL

DIFFUSER, REGISTER & GRILLE SCHEDULE

TAG NO.	MODULE SIZE (IN)	ROUND APAPTER SIZE (IN)	FLEX DUCT SIZE (IN)	SQUARE DUCT SIZE (IN)	SERVICE	CFM RANGE		MAX. NC LEVEL	MANUFACTURER & MODEL NO.	REMARKS
						MIN	MAX			
SR-1	–	–	–	–	SUPPLY	–	–	–	NAILOR	
SR-2	–	–	–	–	SUPPLY	–	–	–	NAILOR	
SR-3	–	–	–	–	SUPPLY	–	–	–	NAILOR	
SR-4	–	–	–	–	SUPPLY	–	–	–	NAILOR	
SR-5	–	–	–	–	SUPPLY	–	–	–	NAILOR	
RR-1	–	–	–	–	RETURN	–	–	–	NAILOR	
RR-2	–	–	–	–	RETURN	–	–	–	NAILOR	
RR-3	–	–	–	–	RETURN	–	–	–	NAILOR	
RR-4	–	–	–	–	RETURN	–	–	–	NAILOR	
RR-5	–	–	–	–	RETURN	–	–	–	NAILOR	

PREPARED BY

BETA
www.BETA-Inc.com

REGISTERED PROFESSIONAL

NOT FOR CONSTRUCTION (CONCEPTUAL)

SUBCONSULTANT

PROJECT

Taunton Wastewater Treatment Facility Improvements

Taunton, MA

TITLE

Hvac Schedules

NO.	REVISIONS	DATE

DRAWN BY: RLB
DESIGNED BY: RHB
CHECKED BY: RHB
ISSUE DATE: 04/15/2020
BETA JOB NO.: 6050

SCALE

NONE

UNLESS OTHERWISE NOTED OR CHANGED BY REPRODUCTION

For Review Only

SHEET NO.

H-0.3

4/15/2020 12:06 PM W:\YEAR - 2018\18009.00 - TAUNTON WWTF UPGRADES\HVAC DEPARTMENT\18009.00 PHASE 1A HVAC LEGEND SCHEDULE AND DETAILS.DWG (BETA STB BW.STB)

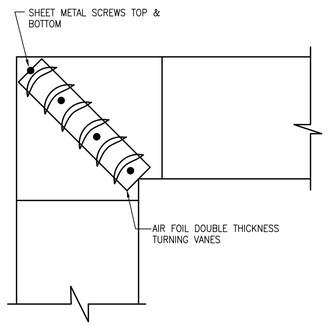

NOTE:
PROVIDE TURNING VANES IN ALL 90° DUCT ELBOWS HAVING A CENTERLINE RADIUS LESS THEN 1/2 TIMES THE DUCT WIDTH.

1 TYPICAL 90° DUCT ELBOW DETAIL
NO SCALE

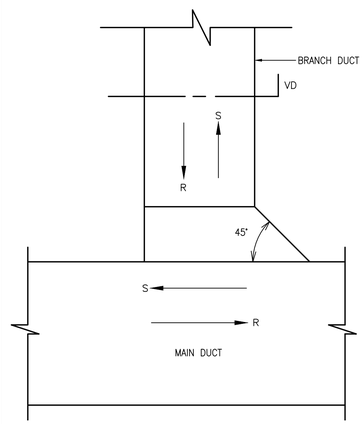

2 BRANCH DUCT CONNECTION DETAIL
NO SCALE

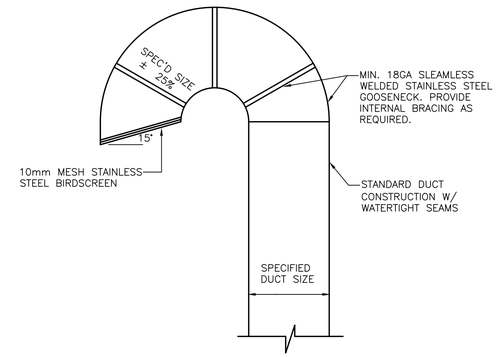

3 GOOSENECK DETAIL
NO SCALE

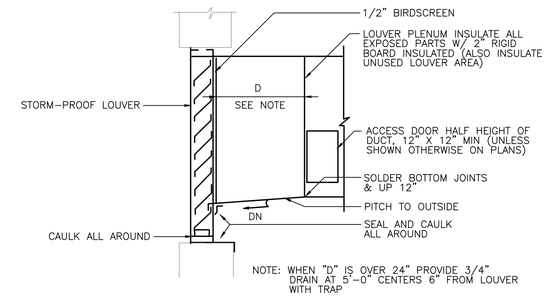

NOTE: WHEN "D" IS OVER 24" PROVIDE 3/4" DRAIN AT 5'-0" CENTERS 6" FROM LOUVER WITH TRAP

4 LOUVER CONNECTION
NO SCALE

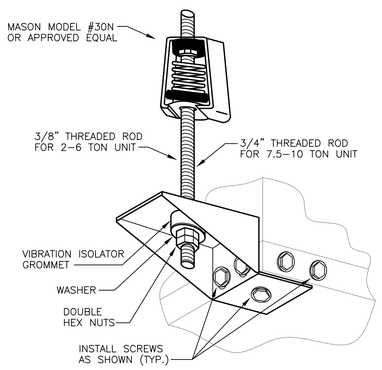

5 HORIZONTAL HEAT PUMP UNIT HANGER KIT ASSEMBLY
NO SCALE

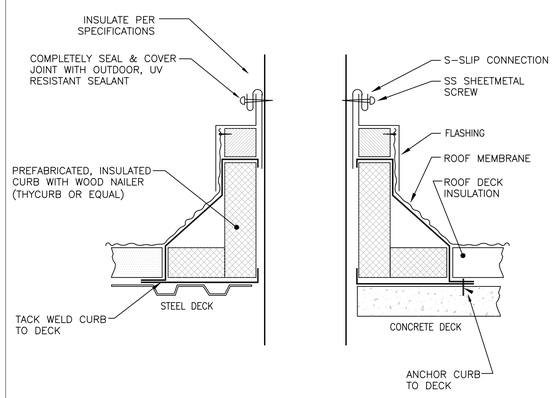

6 DUCT PENETRATION THRU ROOF DETAIL
NO SCALE

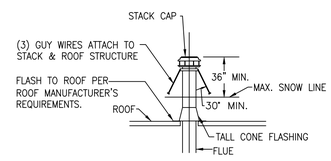

7 FLUE & INTAKE THRU ROOF DETAIL
NO SCALE

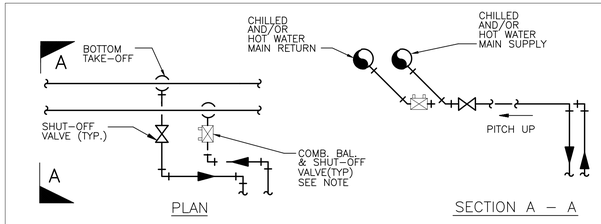

BRANCH PIPING TAKE-OFF TO UNITS OR RADIATION THAT ARE LOCATED BELOW THE MAINS

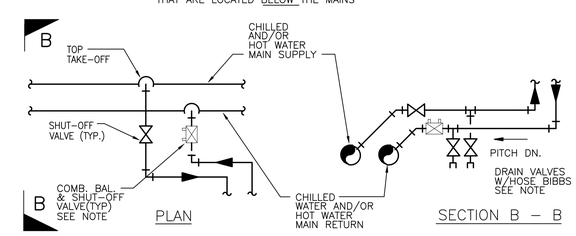

BRANCH PIPING TAKE-OFF TO UNITS OR RADIATION THAT ARE LOCATED ABOVE THE MAINS

NOTE: COMBINATION FLOW MEASURING, BALANCING AND SHUT-OFF VALVES REQUIRED ON ALL BRANCHES 1 1/2" AND LARGER. PROVIDE BALL VALVES ONLY FOR ALL BRANCHES 1 1/4" AND SMALLER. PROVIDE 3/4" DRAIN VALVES WITH HOSE BIBBS CONNECTION AS SHOWN ON ALL BRANCHES 1 1/2" AND LARGER. COMBINATION FLOW MEASURING, BALANCING AND SHUT-OFF VALVES, AND DRAIN VALVES WITH HOSE BIBBS ARE ALSO REQUIRED ON ALL BRANCHES, 2 1/2" AND LARGER FROM ALL VERTICAL RISERS. SEE SPECIFICATION SECTION 15600 FOR VALVE REQUIREMENTS.

8 TYPICAL PIPING BRANCH TAKE-OFF DETAIL
NO SCALE

PREPARED BY

BETA
www.BETA-Inc.com

REGISTERED PROFESSIONAL

NOT FOR CONSTRUCTION (CONCEPTUAL)

SUBCONSULTANT

PROJECT

Taunton Wastewater Treatment Facility Improvements

Taunton, MA

TITLE

Hvac Details

NO.	REVISIONS	DATE

DRAWN BY:	RLB
DESIGNED BY:	RHB
CHECKED BY:	RHB
ISSUE DATE:	04/15/2020
BETA JOB NO.:	6050

SCALE

NONE

UNLESS OTHERWISE NOTED OR CHANGED BY REPRODUCTION

For Review Only

SHEET NO.

H-0.4

4/15/2020 12:06 PM W:\YEAR - 2018\18009.00 - TAUNTON WWTF UPGRADES\HVAC DEPARTMENT\18009.00 PHASE 1A HVAC LEGEND SCHEDULE AND DETAILS.DWG (BETA STB BW.STB)

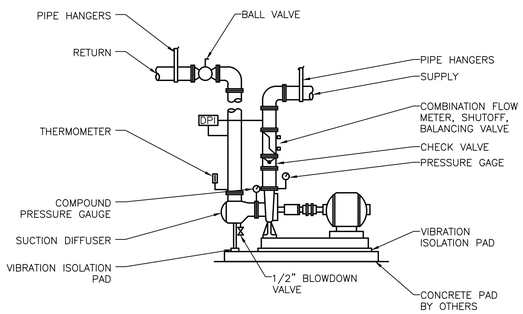

9 BASE MOUNTED PUMP PIPING DETAIL
NO SCALE

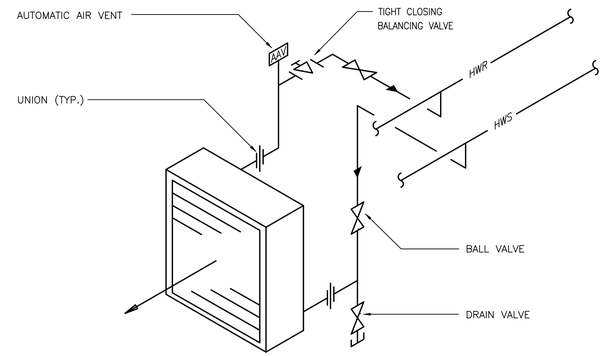

10 UNIT HEATER PIPING DETAIL
NO SCALE

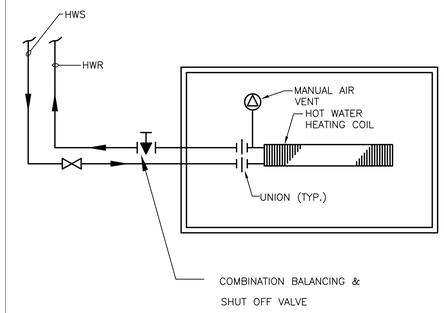

11 HORIZONTAL CABINET HEATER PIPING DETAIL
NO SCALE

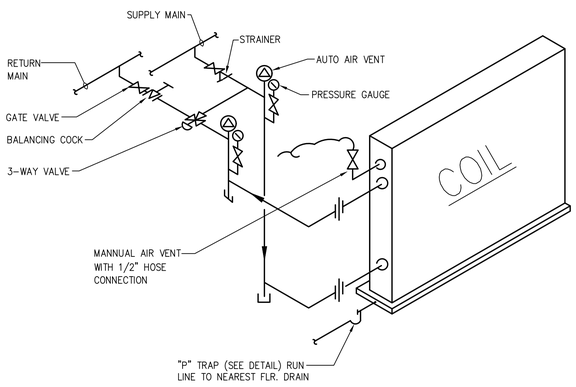

12 SINGLE COIL PIPING DETAIL
NO SCALE

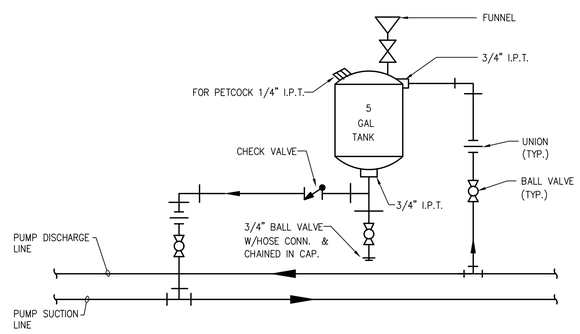

13 CHEMICAL SHOT FEEDER PIPING DETAIL
NO SCALE

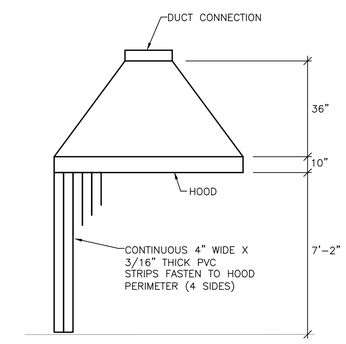

14 TYPICAL EXHAUST HOOD
NO SCALE

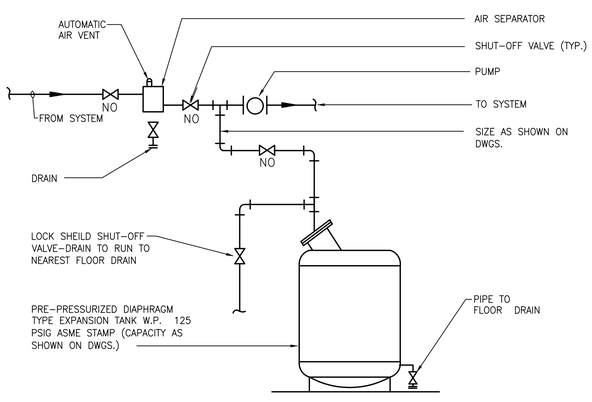

15 TYPICAL DETAIL PIPING CONNECTIONS TO EXPANSION TANKS
NO SCALE

PREPARED BY

BETA
www.BETA-Inc.com

REGISTERED PROFESSIONAL

NOT FOR CONSTRUCTION (CONCEPTUAL)

SUBCONSULTANT

PROJECT

Taunton Wastewater Treatment Facility Improvements

Taunton, MA

TITLE

Hvac Details

NO.	REVISIONS	DATE

DRAWN BY:	RLB
DESIGNED BY:	RHB
CHECKED BY:	RHB
ISSUE DATE:	04/15/2020
BETA JOB NO.:	6050

SCALE

NONE

UNLESS OTHERWISE NOTED OR CHANGED BY REPRODUCTION

For Review Only

SHEET NO.

H-0.5

4/15/2020 12:06 PM W:\YEAR - 2018\18009.00 - TAUNTON WWTF UPGRADES\HVAC DEPARTMENT\18009.00 PHASE 1A HVAC LEGEND SCHEDULE AND DETAILS.DWG (BETA STB BW.STB)

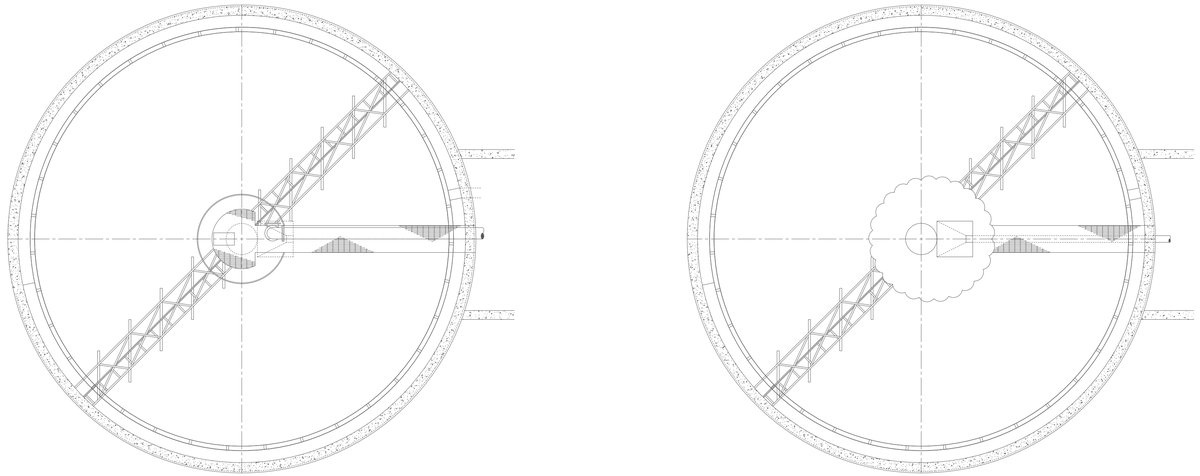

UPPER LEVEL PLAN

SCALE: 1/8"= 1'-0"

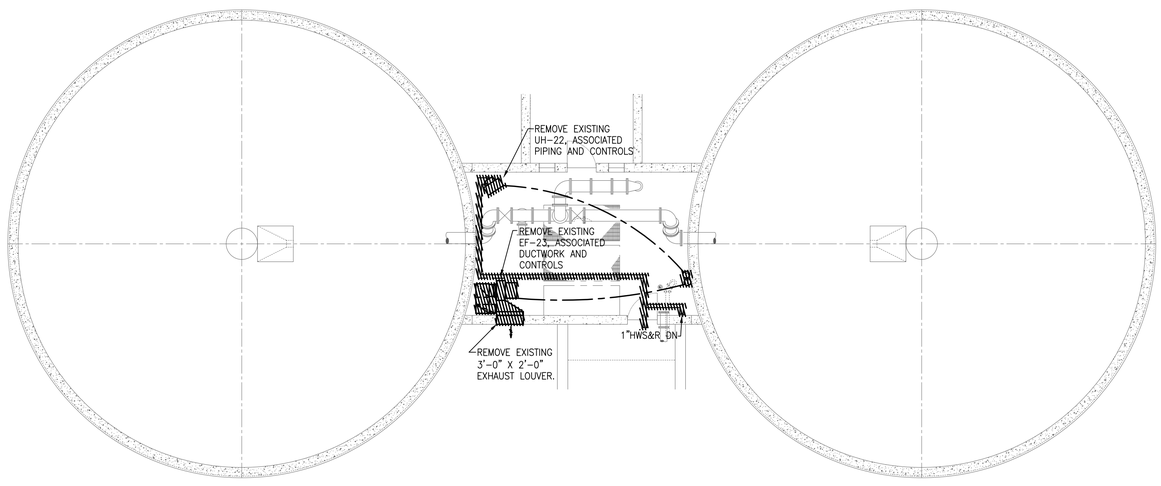

MID LEVEL PLAN

SCALE: 1/8"= 1'-0"

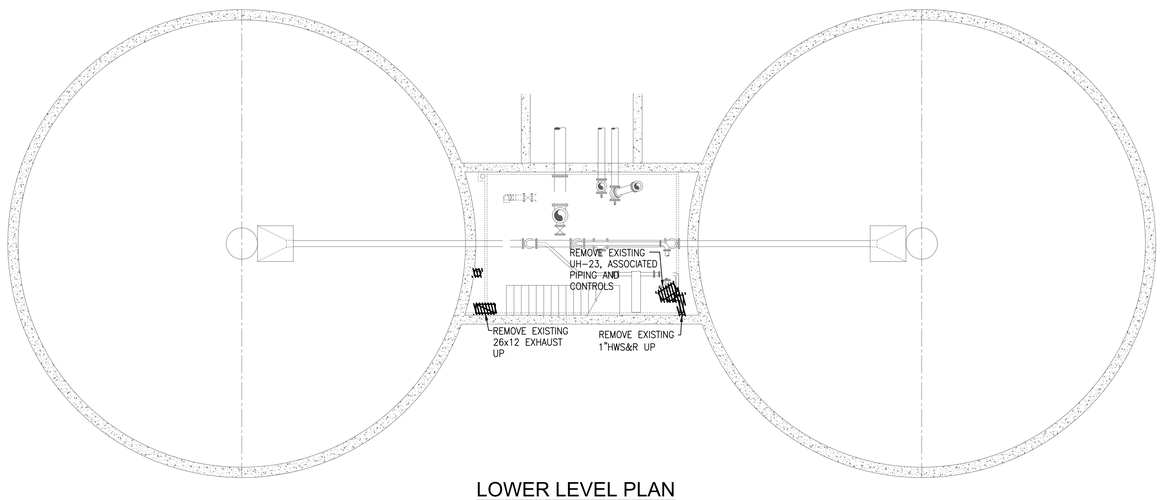

LOWER LEVEL PLAN

SCALE: 1/8"= 1'-0"

PREPARED BY

BETA
www.BETA-Inc.com

REGISTERED PROFESSIONAL

NOT FOR CONSTRUCTION (CONCEPTUAL)

SUBCONSULTANT

PROJECT

Taunton Wastewater Treatment Facility Improvements

Taunton, MA

TITLE

Hvac Gravity Thickening Tanks Demolition Plans

NO.	REVISIONS	DATE

DRAWN BY:	RLB
DESIGNED BY:	RHB
CHECKED BY:	RHB
ISSUE DATE:	04/15/2020
BETA JOB NO.:	6050

SCALE

AS SHOWN

UNLESS OTHERWISE NOTED OR CHANGED BY REPRODUCTION

Not for Construction

SHEET NO.

H-7.1

4/15/2020 1:27 PM W:\YEAR - 2018\18009.00 - TAUNTON WWTF UPGRADES\HVAC DEPARTMENT\18009.00 PHASE 1 A HVAC SOLIDS HANDLING BUILDING.DWG (BETA STB BW.STB)

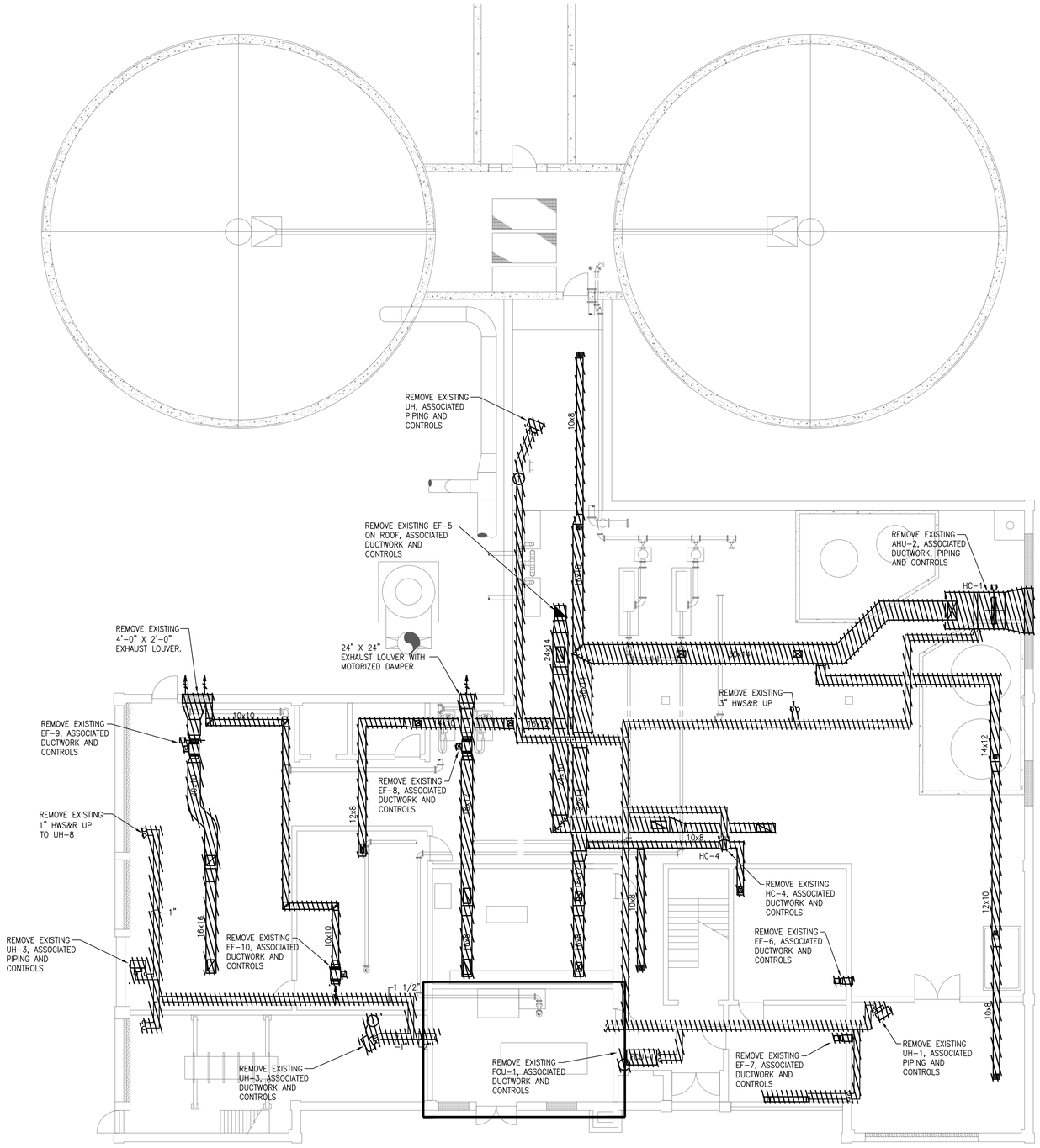

FIRST FLOOR - PLAN

SCALE: 1/8"= 1'-0"

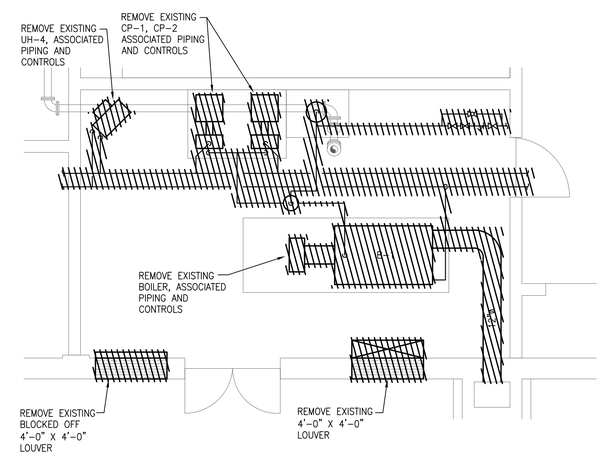

BOILER ROOM PART PLAN

SCALE: 1/4"= 1'-0"

PREPARED BY

BETA
www.BETA-Inc.com

REGISTERED PROFESSIONAL

NOT FOR CONSTRUCTION (CONCEPTUAL)

SUBCONSULTANT

PROJECT

Taunton Wastewater Treatment Facility Improvements

Taunton, MA

TITLE

Hvac Existing Conditions Solids Handling Building First Floor Plan

NO.	REVISIONS	DATE

DRAWN BY:	RLB
DESIGNED BY:	RHB
CHECKED BY:	RHB
ISSUE DATE:	04/15/2020
BETA JOB NO.:	6050

SCALE

AS SHOWN

UNLESS OTHERWISE NOTED OR CHANGED BY REPRODUCTION

Not for Construction

SHEET NO.

H-7.2

4/15/2020 1:28 PM W:\YEAR - 2018\18009.00 - TAUNTON WWTF UPGRADES\HVAC DEPARTMENT\18009.00 PHASE 1 A HVAC SOLIDS HANDLING BUILDING.DWG (BETA STB BW.STB)

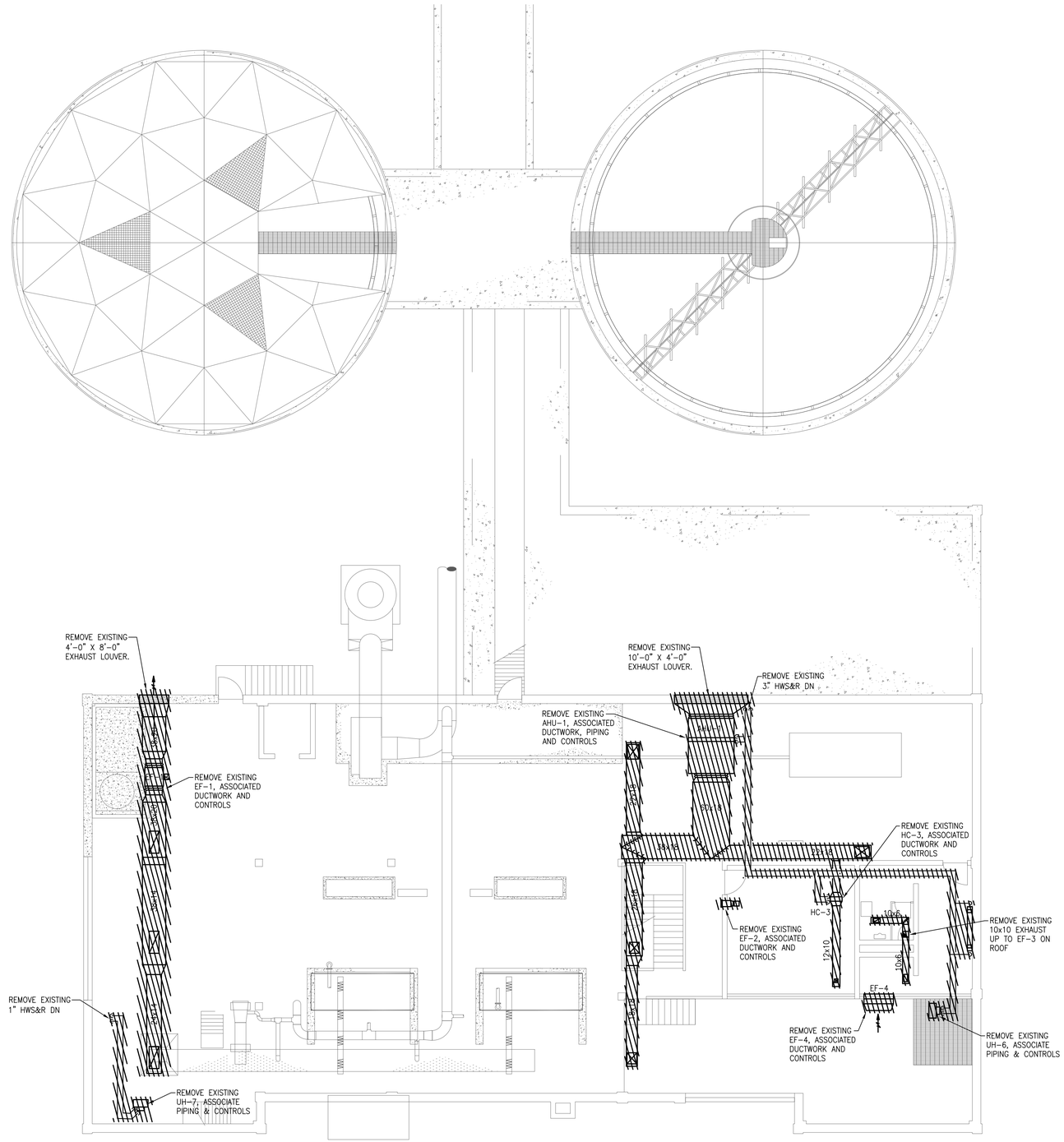

SECOND FLOOR - PLAN

SCALE: 1/8"= 1'-0"

PREPARED BY

BETA
www.BETA-Inc.com

REGISTERED PROFESSIONAL

NOT FOR CONSTRUCTION (CONCEPTUAL)

SUBCONSULTANT

PROJECT

Taunton Wastewater Treatment Facility Improvements

Taunton, MA

TITLE

Hvac Existing Conditions Solids Handling Building Second Floor Plan

NO.	REVISIONS	DATE

DRAWN BY:	RLB
DESIGNED BY:	RHB
CHECKED BY:	RHB
ISSUE DATE:	04/15/2020
BETA JOB NO.:	6050

SCALE

AS SHOWN

UNLESS OTHERWISE NOTED OR CHANGED BY REPRODUCTION

Not for Construction

SHEET NO.

H-7.3

4/15/2020 1:28 PM W:\YEAR - 2018\18009.00 - TAUNTON WWTF UPGRADES\HVAC DEPARTMENT\18009.00 PHASE 1 A HVAC SOLIDS HANDLING BUILDING.DWG (BETA STB BW.STB)

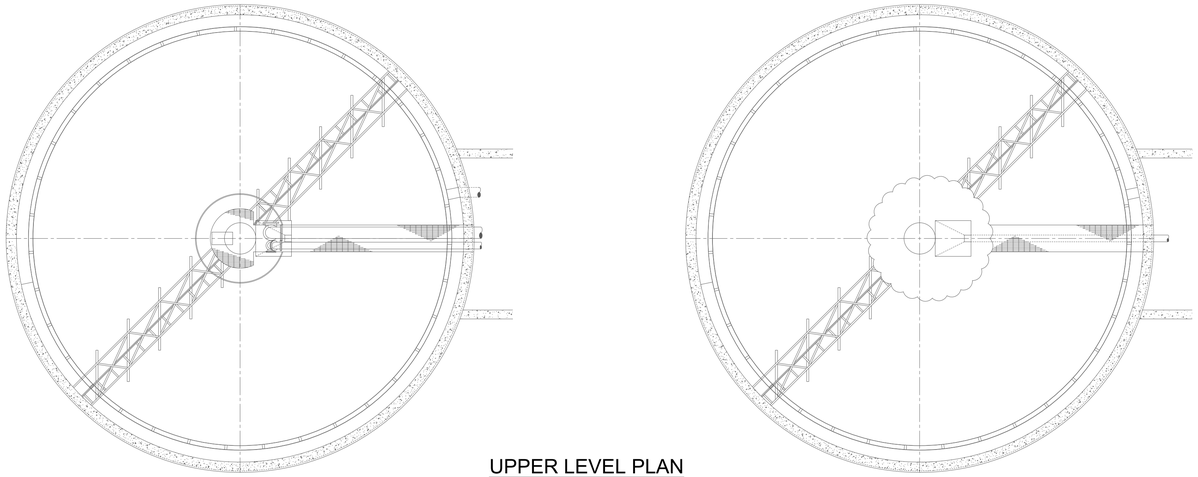

UPPER LEVEL PLAN

SCALE: 1/8"= 1'-0"

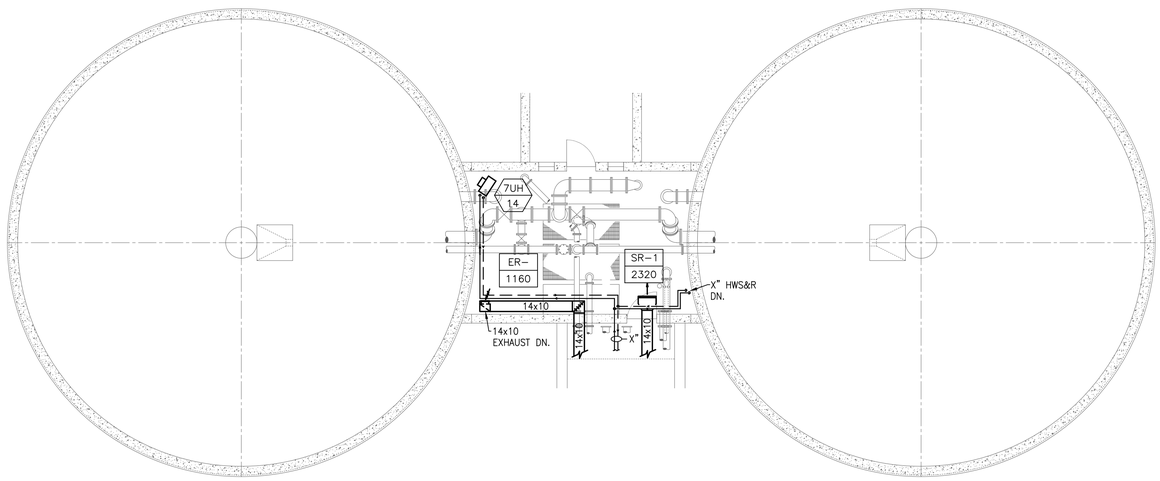

MID LEVEL PLAN

SCALE: 1/8"= 1'-0"

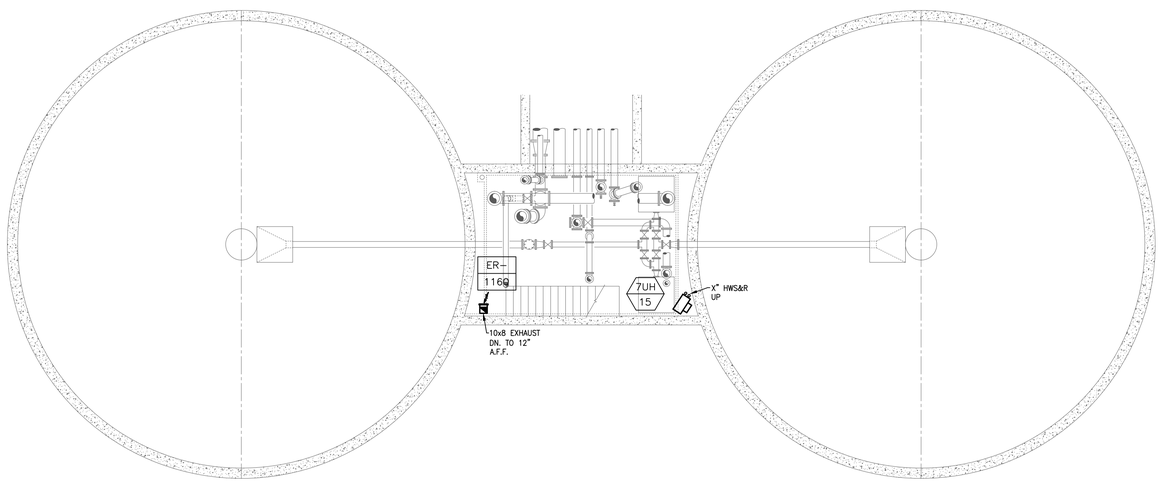

LOWER LEVEL PLAN

SCALE: 1/8"= 1'-0"

PREPARED BY

BETA
www.BETA-Inc.com

REGISTERED PROFESSIONAL

NOT FOR CONSTRUCTION (CONCEPTUAL)

SUBCONSULTANT

PROJECT

Taunton Wastewater Treatment Facility Improvements

Taunton, MA

TITLE

Hvac Gravity Thickening Tanks New Work Plans

NO.	REVISIONS	DATE

DRAWN BY:	RLB
DESIGNED BY:	RHB
CHECKED BY:	RHB
ISSUE DATE:	04/15/2020
BETA JOB NO.:	6050

SCALE

AS SHOWN

UNLESS OTHERWISE NOTED OR CHANGED BY REPRODUCTION

Not for Construction

SHEET NO.

H-7.4

4/15/2020 1:29 PM W:\YEAR - 2018\18009.00 - TAUNTON WWTF UPGRADES\HVAC DEPARTMENT\18009.00 PHASE 1 A HVAC SOLIDS HANDLING BUILDING.DWG (BETA STB BW.STB)

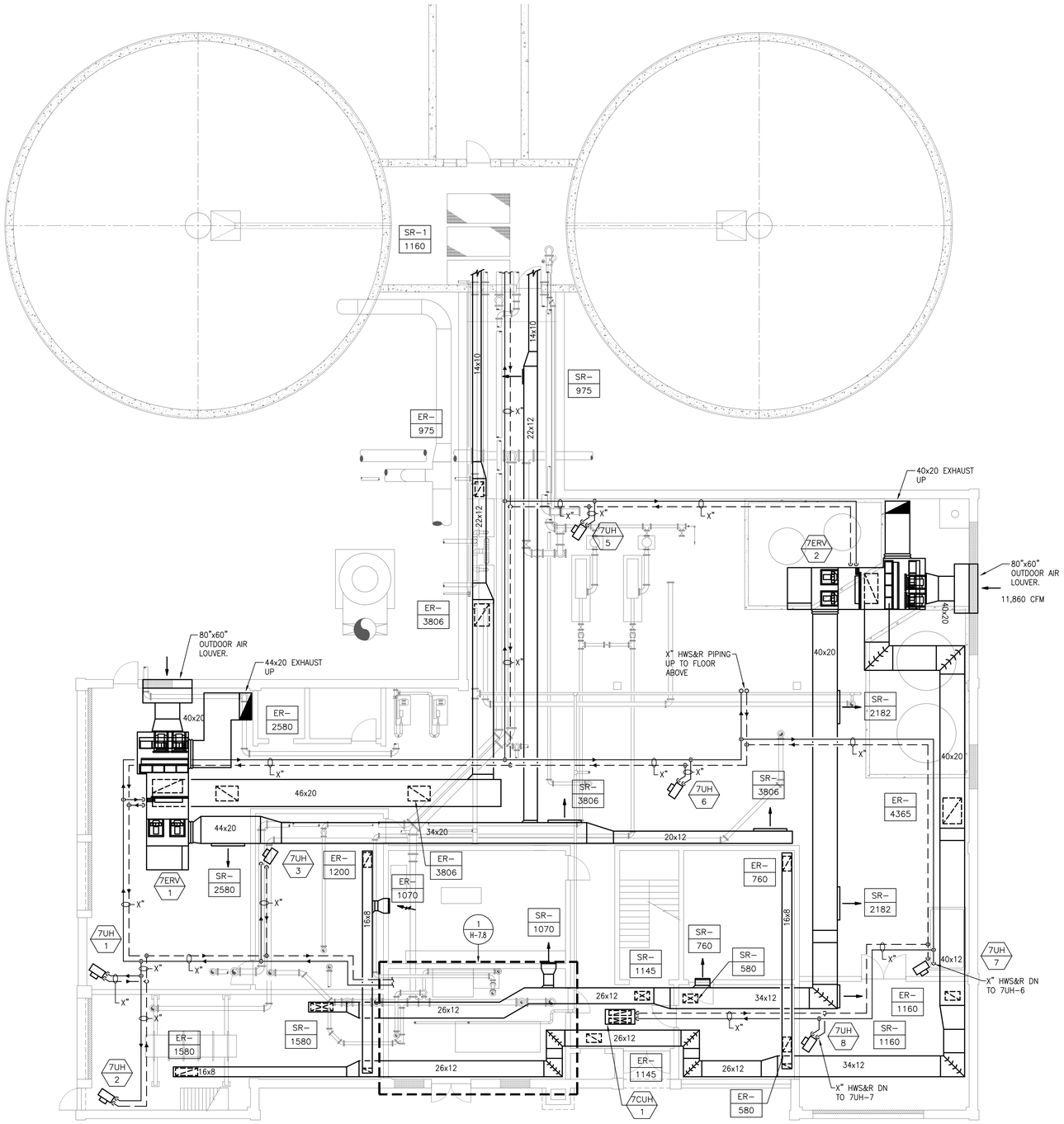

FIRST FLOOR - PLAN

SCALE: 1/8"= 1'-0"

PREPARED BY

BETA
www.BETA-Inc.com

REGISTERED PROFESSIONAL

NOT FOR CONSTRUCTION (CONCEPTUAL)

SUBCONSULTANT

PROJECT

Taunton Wastewater Treatment Facility Improvements

Taunton, MA

TITLE

Hvac New Work
Solids Handling
Building
First Floor Plan

NO.	REVISIONS	DATE

DRAWN BY:	RLB
DESIGNED BY:	RHB
CHECKED BY:	RHB
ISSUE DATE:	04/15/2020
BETA JOB NO.:	6050

SCALE

AS SHOWN

UNLESS OTHERWISE NOTED OR CHANGED BY REPRODUCTION

Not for Construction

SHEET NO.

H-7.5

4/15/2020 1:40 PM W:\YEAR - 2018\18009.00 - TAUNTON WWTF UPGRADES\HVAC DEPARTMENT\18009.00 PHASE 1 A HVAC SOLIDS HANDLING BUILDING.DWG (BETA STB BW.STB)

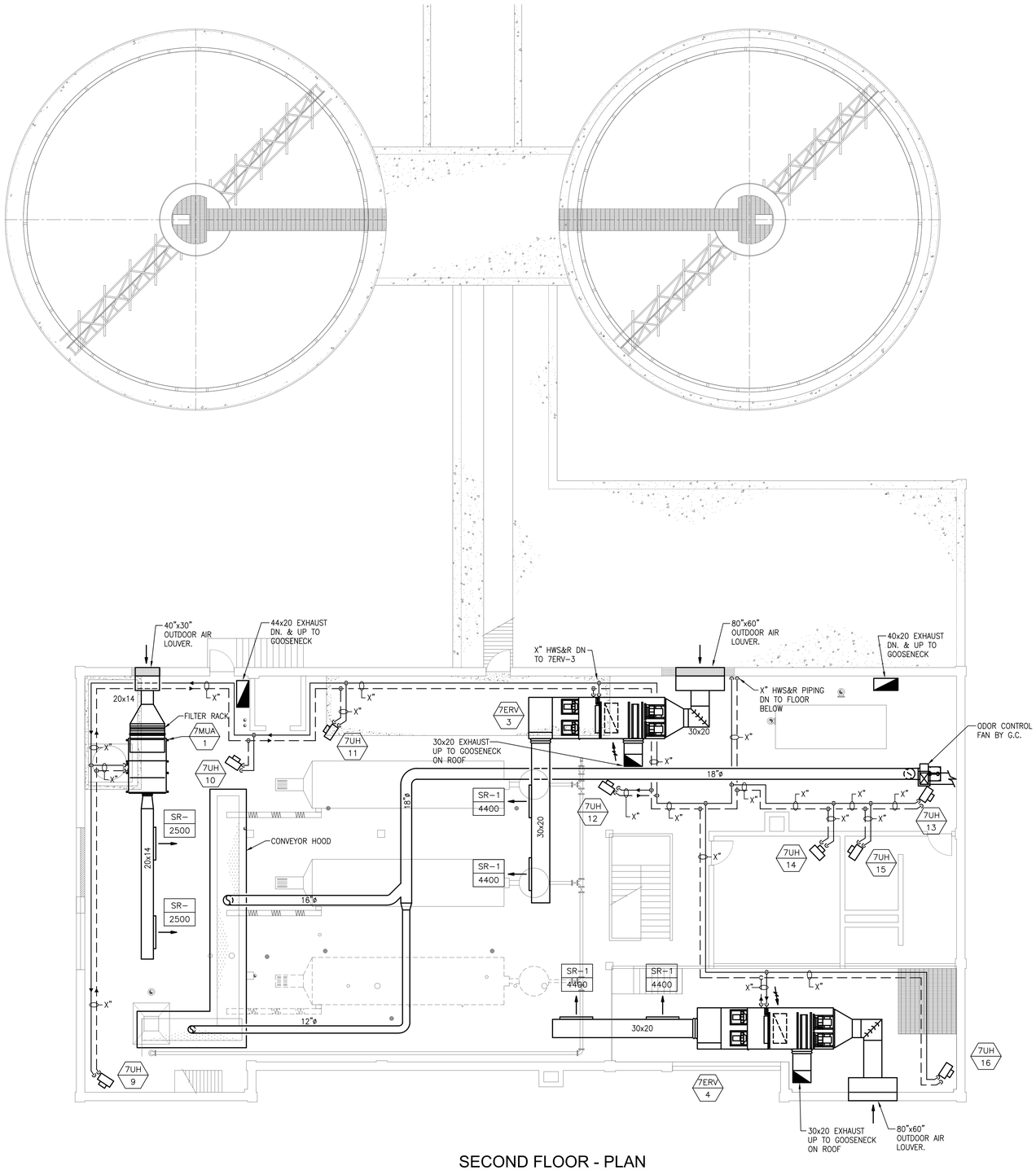

SECOND FLOOR - PLAN

SCALE: 1/8"= 1'-0"

PREPARED BY

BETA
www.BETA-Inc.com

REGISTERED PROFESSIONAL

NOT FOR CONSTRUCTION (CONCEPTUAL)

SUBCONSULTANT

PROJECT

Taunton Wastewater Treatment Facility Improvements

Taunton, MA

TITLE

Hvac New Work Solids Handling Building Second Floor Plan

NO.	REVISIONS	DATE

DRAWN BY:	RLB
DESIGNED BY:	RHB
CHECKED BY:	RHB
ISSUE DATE:	04/15/2020
BETA JOB NO.:	6050

SCALE

AS SHOWN

UNLESS OTHERWISE NOTED OR CHANGED BY REPRODUCTION

Not for Construction

SHEET NO.

H-7.6

4/15/2020 1:29 PM W:\YEAR - 2018\18009.00 - TAUNTON WWTF UPGRADES\HVAC DEPARTMENT\18009.00 PHASE 1 A HVAC SOLIDS HANDLING BUILDING.DWG (BETA STB BW.STB)

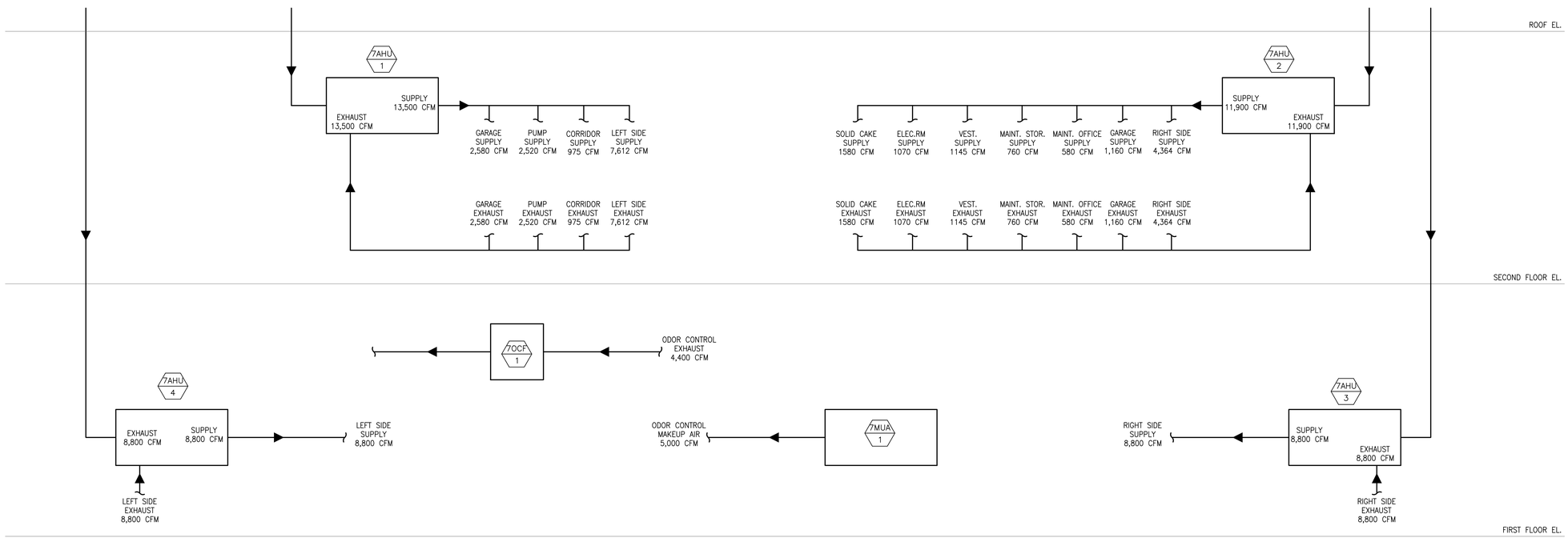

AIR FLOW DIAGRAM

NO SCALE

PREPARED BY

BETA
www.BETA-Inc.com

REGISTERED PROFESSIONAL

NOT FOR CONSTRUCTION (CONCEPTUAL)

SUBCONSULTANT

PROJECT

Taunton Wastewater Treatment Facility Improvements

Taunton, MA

TITLE

Hvac Solids Handling Building Air Flow Diagram

NO.	REVISIONS	DATE

DRAWN BY:	RLB
DESIGNED BY:	RHB
CHECKED BY:	RHB
ISSUE DATE:	04/15/2020
BETA JOB NO.:	6050

SCALE

AS SHOWN

UNLESS OTHERWISE NOTED OR CHANGED BY REPRODUCTION

Not for Construction

SHEET NO.

H-7.7

4/15/2020 12:14 PM W:\YEAR - 2018\18009.00 - TAUNTON WWTF UPGRADES\HVAC DEPARTMENT\18009.00 PHASE 1 A HVAC SOLIDS HANDLING BUILDING.DWG (BETA STB BW.STB)

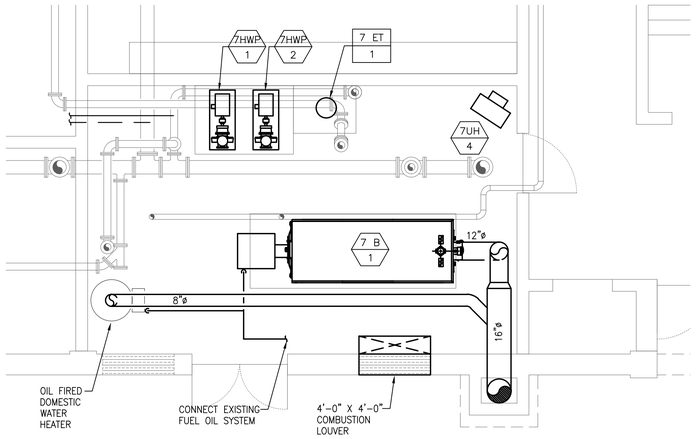

BOILER ROOM PART PLAN

SCALE: 1/4"= 1'-0"

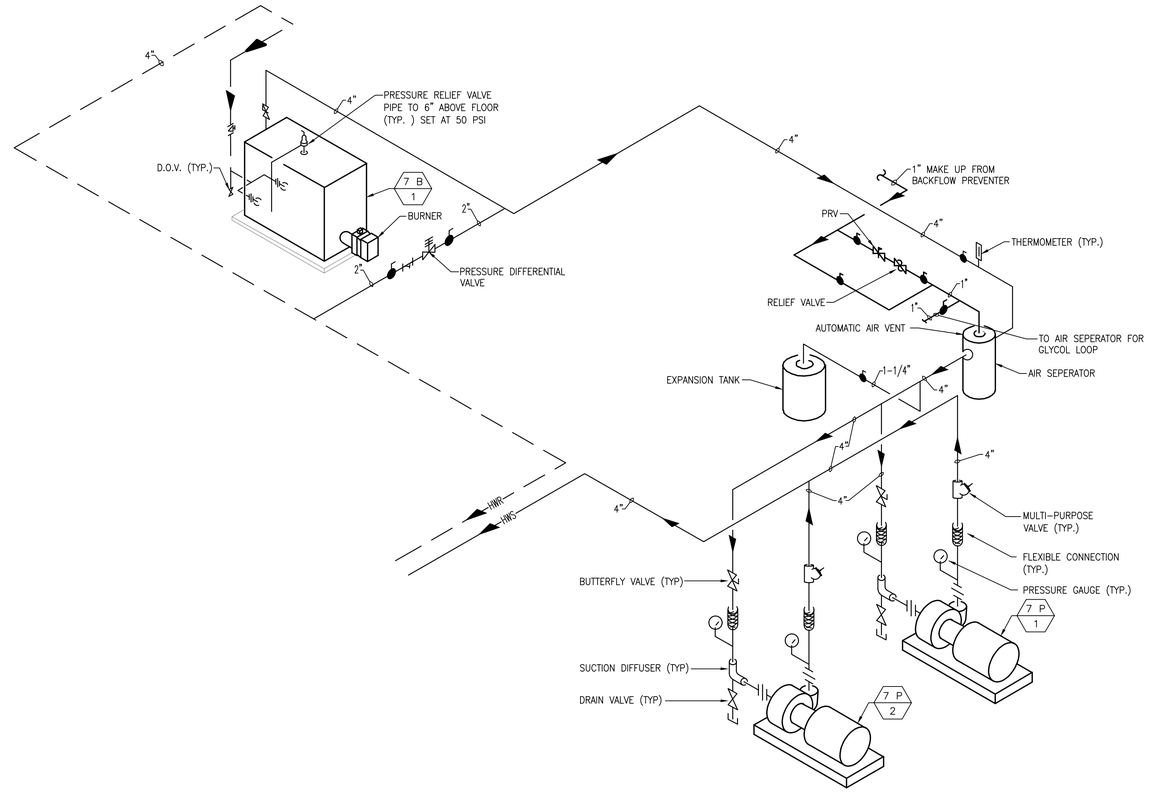

PIPING SCHEMATIC

NO SCALE

PREPARED BY

BETA
www.BETA-Inc.com

REGISTERED PROFESSIONAL

NOT FOR CONSTRUCTION (CONCEPTUAL)

SUBCONSULTANT

PROJECT

Taunton Wastewater Treatment Facility Improvements

Taunton, MA

TITLE

Hvac New Work
Solids Handling
Building
Boiler Room
Part Plan

NO.	REVISIONS	DATE

DRAWN BY:	RLB
DESIGNED BY:	RHB
CHECKED BY:	RHB
ISSUE DATE:	04/15/2020
BETA JOB NO.:	6050

SCALE

AS SHOWN

UNLESS OTHERWISE NOTED OR CHANGED BY REPRODUCTION

Not for Construction

SHEET NO.

H-7.8

4/15/2020 12:14 PM W:\YEAR - 2018\18009.00 - TAUNTON WWTF UPGRADES\HVAC DEPARTMENT\18009.00 PHASE 1 A HVAC SOLIDS HANDLING BUILDING.DWG (BETA STB BW.STB)

PLUMBING NOTES

1. THE WORK COVERED CONSISTS OF FURNISHING ALL LABOR AND MATERIALS NECESSARY TO INSTALL, COMPLETE AND READY FOR CONTINUOUS OPERATION, THE PLUMBING SYSTEMS, APPARATUS AND EQUIPMENT FOR THIS PROJECT.
2. ALL EQUIPMENT AND MATERIALS FURNISHED UNDER THE PLUMBING SUB-CONTRACT, LABOR AND TESTING PERFORMED HEREIN SHALL BE IN COMPLETE ACCORDANCE WITH THE STATE BUILDING CODE, LOCAL PLUMBING CODES, ALL LOCAL CODES AND REGULATIONS, NATIONAL FIRE PROTECTION ASSOCIATION, INSURANCE REGULATIONS AND REQUIREMENTS GOVERNING SUCH WORK.
3. ANY AND ALL PERMITS REQUIRED FOR INSTALLATION OF ANY MATERIAL SHALL BE OBTAINED AS PART OF THE WORK OF THE SPECIFICATION INCLUDING ALL FEES OR EXPENSES INCURRED.
4. FOR PLUMBING SCHEDULES, REFER TO DRAWING P0.2.
5. FOR PLUMBING DETAILS, REFER TO DRAWINGS P0.3 & P.04.
6. ALL PRODUCTS USED AS PART OF THE POTABLE WATER SYSTEM WHERE THE INTENDED PURPOSE IS TO DELIVER OR CONVEY POTABLE WATER FOR HUMAN CONSUMPTION SHALL BE LEAD FREE AND CONFORM TO THE LATEST "LEAD FREE" LAW.
7. WHERE WATER PIPING IS SHOWN DROPPING INTO PLUMBING CHASES WITH SIZES NOTED, THAT SIZE SHALL BE CARRIED FULL LENGTH THROUGH THE CHASE. REFER TO PLUMBING FIXTURE SCHEDULE ON THIS DRAWING FOR INDIVIDUAL FIXTURE CONNECTION SIZES.
8. UNLESS OTHERWISE NOTED, ALL HORIZONTAL DRAINAGE PIPING WHICH IS 3" OR LESS IN DIAMETER SHALL PITCH OF NOT LESS THAN 1/4" PER FOOT AND ALL HORIZONTAL DRAINAGE PIPING WHICH IS 4" OR LARGER IN DIAMETER SHALL PITCH OF NOT LESS THAN 1/8" PER FOOT.
9. PROVIDE ALL FLOOR CLEANOUTS WITH HUB AND SPIGOT; LEAD AND OAKUM JOINTS FROM CLEANOUT TO AND INCLUDING CONNECTION TO SANITARY OR STORM DRAIN.
10. REFER TO ARCHITECTURAL PLANS FOR EXACT LOCATION AND HEIGHT OF ALL PLUMBING FIXTURES.
11. MISCELLANEOUS DISCREPANCIES OR OMISSIONS WHICH MIGHT APPEAR ON THE PLANS OR SPECIFICATIONS WILL NOT RELIEVE THE PLUMBING SUB-CONTRACTOR OF CODE COMPLIANCE.
12. ALL NEW FLOOR DRAINS SHALL BE PROVIDED WITH A TRAP PRIMER CONNECTION. CONTRACTOR SHALL PROVIDE ALL ASSOCIATED EQUIPMENT NECESSARY TO PROVIDE A COMPLETE SYSTEM.
13. PROVIDE CLEANOUTS AT ALL CHANGE OF DIRECTIONS FOR STORM AND SANITARY/WASTE PIPING.
14. PROVIDE DANDY CLEANOUTS AT ALL EXPOSED STORM AND SANITARY/WASTE PIPING 18 INCHES (APPROXIMATELY) ABOVE FINISHED FLOOR WHERE PIPING GOES BELOW FINISHED FLOOR/GRADE.
15. PROVIDE WALL CLEANOUTS WITH ACCESS PANELS AT ALL STORM AND SANITARY/WASTE PIPING WITHIN PIPE CHASES OR WALLS.
16. ALL INTERIOR BURIED DOMESTIC WATER PIPING, NON-POTABLE WATER PIPING, TEMPERED WATER PIPING OR AIR PIPING SHALL BE SOFT ROLLED "K" COPPER COIL AND BE PROTECTED WITH A HIGH DENSITY RUBBER INSULATION. FITTINGS SHALL NOT BE PERMITTED IN OR UNDER SLAB. PROVIDE SLAB PENETRATIONS WITH SLEEVE AND FIRE STOPPING.
17. RISER DIAGRAMS ARE SHOWN TO INDICATE PIPE SIZES ONLY AND ARE NOT INTENDED TO SHOW EVERY OFFSET OR FITTING. FOR FIXTURE CONNECTION SIZES, REFER TO PLUMBING FIXTURE SCHEDULE ON PLUMBING DRAWING P0.2. IF ACCESS PANELS ARE REQUIRED; LOCATE BENEATH COUNTER TOPS IN AN ACCESSIBLE LOCATION WHICH SHALL NOT INTERFERE WITH OTHER PIPING. WHERE CONFLICTS IN PIPE SIZES OCCUR BETWEEN FLOOR PLANS AND RISER DIAGRAMS, THE LARGER PIPE SIZE SHALL PREVAIL.

PLUMBING LEGEND

SYMBOL	ABBREVIATION	DESCRIPTION
	ETR	LIGHT LINE INDICATES EXISTING PIPING TO REMAIN
	RE	REMOVE EXISTING PIPING
	CTE	CONNECT TO EXISTING
	C&C	CUT & CAP
		BELOW FLOOR PIPING (INDICATED AS DOUBLE LINEWORK)
	CW	COLD WATER
	HW	HOT WATER
	HWR	HOT WATER RECIRCULATION
	S or W	SOIL OR WASTE
	V	VENT
	RW	RAIN WATER CONDUCTOR
OFD	OFD	STORM WATER OVER FLOW DRAINAGE
PD	PD	PUMPED DISCHARGE
	HTI / TMC	HEAT TRACE AND INSULATE
	CONT	CONTINUATION
	UP	PIPE RISE OR UP
	DP OR DN	PIPE DROP OR DOWN
	TEE	PIPE TEE
	SOV	SHUT-OFF VALVE
		SOLENOID VALVE
	VIV	VALVE IN VERTICAL
	CV	CHECK VALVE
	BVA	BALANCING VALVE ASSEMBLY
	W & T	WASTE & TRAP
	OED	OPEN END DRAIN WITH BACKWATER VALVE
	CO	CLEANOUT PLUG
	FCO	FLUSH FLOOR CLEANOUT
	GCO	GRADE CLEANOUT
	DCO	DANDY CLEANOUT
		CAPPED PIPE
		ARROW INDICATES DIRECTION OF FLOW
.01		ARROW INDICATES DIRECTION OF SLOPE
		UNION
	WTS	WATERTIGHT SLEEVE
TP	TP	TRAP PRIMER
	HB	HOSE BIBB
	WH	WALL HYDRANT
1 / P-1		DIAGRAM NO. & DWG. NO. REFERENCE
	FD "A"	FLOOR DRAIN & TYPE
	RD "A"	ROOF DRAIN & TYPE
	RPBP	REDUCED PRESSURE BACKFLOW PREVENTER
WM	WM	WATER METER
GM	GM	GAS METER
CO	CO	CARBON MONOXIDE DETECTOR
	T	THERMOMETER
	PG	PRESSURE GAUGE WITH PETCOCK
	T&P	TEMPERATURE AND PRESSURE RELIEF VALVE
	SA	SHOCK ABSORBER
		VACUUM RELIEF VALVE

PLUMBING LEGEND

SYMBOL	ABBREVIATION	DESCRIPTION
	WH-1	WATER HEATER & NUMBER
	SS	SOIL STACK
	VS	VENT STACK
	VTR	VENT THRU ROOF
	INV	INVERT
	TMV	THERMOSTATIC MIXING VALVE
	TW	TEMPERED WATER (70°F)
	TYP	TYPICAL
	NTS	NOT TO SCALE
	AFF	ABOVE FINISHED FLOOR
	LPC	LIMIT OF PLUMBING CONTRACT
	GC	GENERAL CONTRACTOR
	FPC	FIRE PROTECTION CONTRACTOR
	PC	PLUMBING CONTRACTOR
	EC	ELECTRICAL CONTRACTOR
	HVAC	HVAC CONTRACTOR
	LPC	LIMIT OF PLUMBING CONTRACT
	WC	WATER CLOSET
	UR	URINAL
	LAV	LAVATORY
	MR	MOP RECEPTOR
	SHR	SHOWER
	DF	DRINKING FOUNTAIN
	SK	SINK
	F & I	FURNISH & INSTALL
	S=.01	SLOPE = 1/8" PER FOOT
	S=.02	SLOPE = 1/4" PER FOOT
	NO	NORMALLY OPEN
	NC	NORMALLY CLOSED
	F.F.E.	FINISHED FLOOR ELEVATION

PREPARED BY

BETA
www.BETA-Inc.com

REGISTERED PROFESSIONAL

NOT FOR CONSTRUCTION (CONCEPTUAL)

SUBCONSULTANT

PROJECT

Taunton Wastewater Treatment Facility Improvements

Taunton, MA

TITLE

Plumbing Legend and General Notes

NO.	REVISIONS	DATE

DRAWN BY:	RLB
DESIGNED BY:	JL
CHECKED BY:	JL
ISSUE DATE:	04/15/2020
BETA JOB NO.:	6050

SCALE

NONE

UNLESS OTHERWISE NOTED OR CHANGED BY REPRODUCTION

For Review Only

SHEET NO.

P-0.1

4/15/2020 12:02 PM W:\YEAR - 2018\18009.00 - TAUNTON WWTF UPGRADES\PLUMBING DEPARTMENT\18009.00 PHASE 1A PLUMBING LEGEND SCHEDULES DETAILS.DWG (BETA STB BW.STB)

OIL FIRED WATER HEATER SCHEDULE

DESIGNATION	MANUFACTURER	MODEL	LOCATION	GALS.	RECOVERY		GPH #2 FUEL OIL	OIL CONN. SIZE	FLUE CONN. SIZE	REMARKS
					G.P.H.	△ TEMP °F				
7DWH-1	AO SMITH	COF-199*	SLUDGE BLDG	86	191	100	1.42	1/2"	8"	-

* MANUFACTURERS NAMES AND MODEL NUMBERS ARE SHOWN ONLY TO REPRESENT TYPE, STYLE AND LEVEL OF QUALITY EXPECTED, REFER TO SPECIFICATIONS FOR ACCEPTABLE EQUAL MANUFACTURERS.

CIRCULATING PUMP SCHEDULE

DESIGNATION	LOCATION	WATER HEATER SERVED	MODEL	CAPACITY (GPM)	HEAD (FEET)	TYPE	ELECTRICAL REQUIREMENTS				REMARKS
							RPM	HP	VOLTS	Φ	
7.DWP-1	MECH ROOM	7DWH-1	TACO 006B	2	6	INLINE	3250	1/40	115	1	SERVES 120' HW SYSTEM

* MANUFACTURERS NAMES AND MODEL NUMBERS ARE SHOWN ONLY TO REPRESENT TYPE, STYLE AND LEVEL OF QUALITY EXPECTED, REFER TO SPECIFICATIONS FOR ACCEPTABLE EQUAL MANUFACTURERS.

SHOCK ABSORBER SCHEDULE

PDI RATING SYMBOL	A	B	C	D	E
PRECISION PLUMBING PRODUCTS	SC-500	SC-750	SC-1000	SC-1250	SC-1500
WATTS REGULATOR COMPANY	0750030	0750053	0750060	0750070	0750090
WADE	5-P	10-P	20-P	50-P	75-P

* MANUFACTURERS NAMES AND MODEL NUMBERS ARE SHOWN ONLY TO REPRESENT TYPE, STYLE AND LEVEL OF QUALITY EXPECTED, REFER TO SPECIFICATIONS FOR ACCEPTABLE EQUAL MANUFACTURERS.

PLUMBING FIXTURE SCHEDULE

DESIGNATION	FIXTURE DESCRIPTION	CONNECTION SIZE							REMARKS
		W1	HW1	BLW	SAN	V	NPW1	NPHW1	
EWU-1	EMERGENCY SHOWER/EYEWASH	-	-	1 1/4"	-	-	-	-	INTERIOR MOUNTED, CORROSION RESISTANT, EMERGENCY SHOWER/EYEWASH (COMBINATION UNIT) WITH HORN, STROBE AND FLOW SWITCH

SUMP PUMP SCHEDULE

DESIGNATION	LOCATION	MODEL	CAPACITY (GPM)	HEAD (FEET)	TYPE	ELECTRICAL REQUIREMENTS				REMARKS
						RPM	HP	VOLTS	Φ	
7SP-1	SLUDGE HANDLING	WEIL 2443	20	40	DUPLEX SUBMERSIBLE	1750	1/2	480	3	AUTOMATIC WITH FLOAT

4/15/2020 12:02 PM W:\YEAR - 2018\18009.00 - TAUNTON WWTF UPGRADES\PLUMBING DEPARTMENT\18009.00 PHASE 1A PLUMBING LEGEND SCHEDULES DETAILS.DWG (BETA.STB BW.STB)

PREPARED BY

BETA
www.BETA-Inc.com

REGISTERED PROFESSIONAL

NOT FOR CONSTRUCTION (CONCEPTUAL)

SUBCONSULTANT

PROJECT

Taunton Wastewater Treatment Facility Improvements

Taunton, MA

TITLE

Plumbing Schedules

NO.	REVISIONS	DATE

DRAWN BY:	RLB
DESIGNED BY:	RHB
CHECKED BY:	RHB
ISSUE DATE:	04/15/2020
BETA JOB NO.:	6050

SCALE

NONE

UNLESS OTHERWISE NOTED OR CHANGED BY REPRODUCTION

For Review Only

SHEET NO.

P-0.2

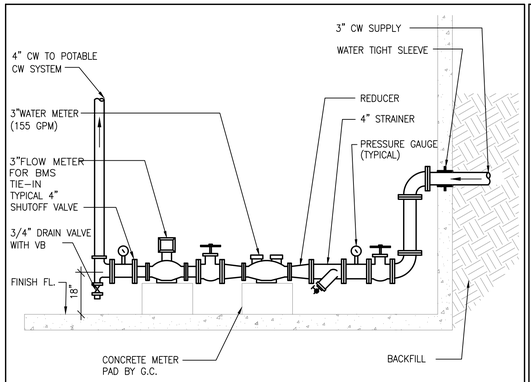

1 DOMESTIC WATER METER DETAIL NTS

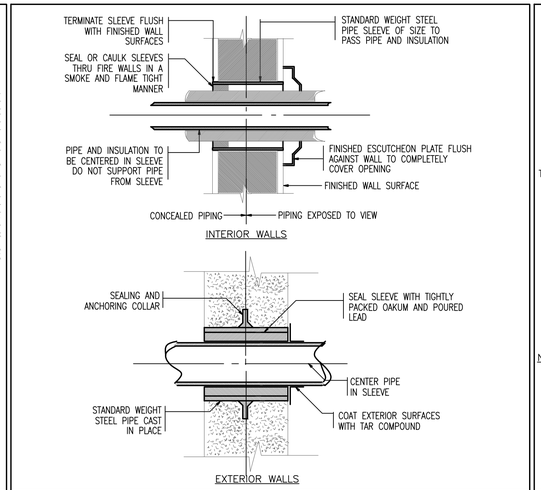

2 PIPING SLEEVE DETAIL NTS

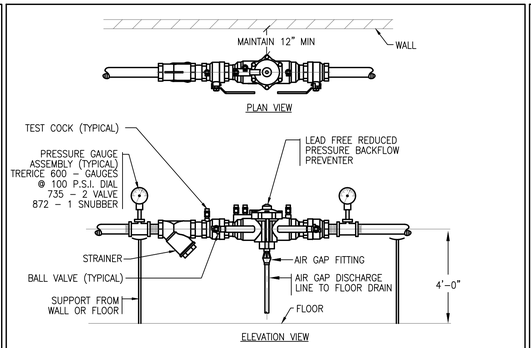

NOTES:
1. BACKFLOW PREVENTER SHALL BE APPROVED BY THE DEPARTMENT OF ENVIRONMENTAL PROTECTION AGENCY.
2. BACKFLOW PREVENTER SHALL BE IN COMPLETE ACCORDANCE WITH AUTHORITIES HAVING JURISDICTION. THE PLUMBING CONTRACTOR SHALL SUBMIT PLANS AND DEVICE INFORMATION FOR APPROVAL PRIOR TO INSTALLATION.
3. FURNISH TO OWNER ONE TEST KIT AND SPARE PARTS KIT FOR EACH DEVICE.
4. THIS CONTRACTOR SHALL ACT AS THE OWNERS AGENT IN SEEKING APPROVAL FROM ALL LOCAL AND STATE AUTHORITIES. THIS CONTRACTOR SHALL SUBMIT ALL PLANS, SPECS, AND APPLICATIONS REQUIRED FOR APPROVAL AND PAY ALL FEES.
5. SEE FLOOR PLANS FOR SIZES.
6. MAINTAIN 1'-0" CLEARANCE FROM WALL.

3 RPZ BACKFLOW PREVENTER DETAIL NTS

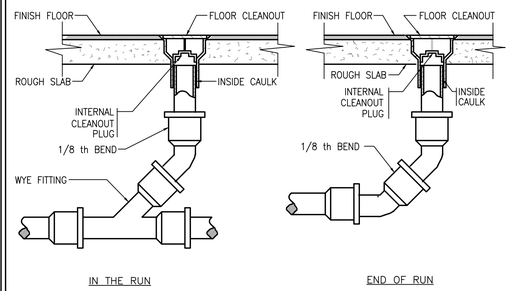

NOTE:
1. ALL COVERS IN TILE FLOORS SHALL BE RECESSED TYPE TO RECEIVE TILE.

4 FLOOR CLEANOUT DETAIL NTS

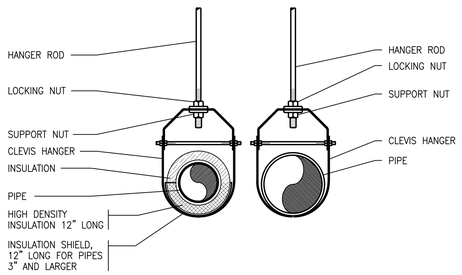

HANGER ROD SCHEDULE	
PIPE SIZE	ROD SIZE
UP TO 2"	3/8" DIA.
2 1/2" THRU 3"	1/2" DIA.
4" AND 5"	5/8"
6" THRU 8"	3/4"
12"	7/8"

HANGER ROD SPACING	
PIPE SIZE	MAX. ALLOWABLE SPACING
1"	7'
1 1/4"	8'
1 1/2"	9'
2"	10'
2 1/2"	11'
3" THRU 8"	12'
10" & 12"	15"

INSULATED AND NON INSULATED PLUMBING SYSTEMS

5 CLEVIS PIPE HANGER DETAIL NTS

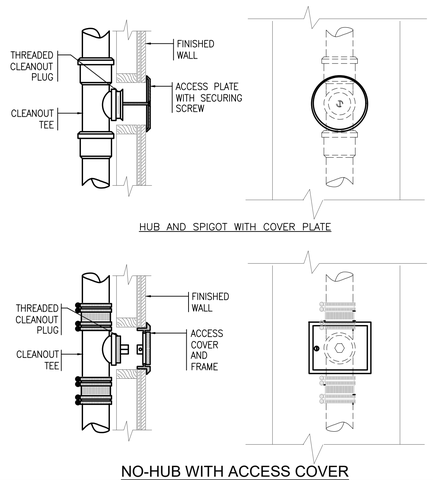

6 WALL CLEANOUTS DETAIL NTS

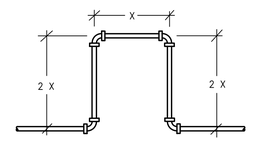

SIZE OF MAIN	"X"
1/2"	1'-8"
3/4"	1'-10"
1"	2'-1"
1-1/4"	2'-4"
1-1/2"	2'-6"
2"	2'-9"
2-1/2"	3'-0"
3"	3'-3"

7 EXPANSION LOOP DETAIL NTS

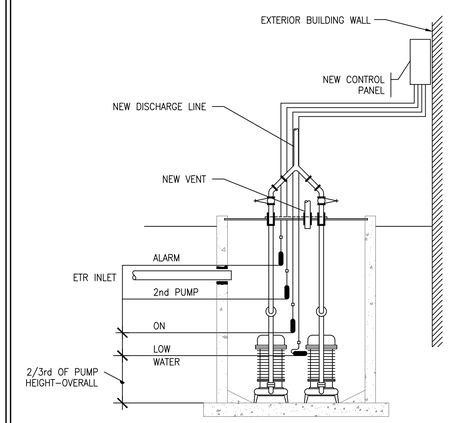

8 NEW EJECTOR PUMPS IN EXISTING PIT DETAIL NTS

PREPARED BY

BETA
www.BETA-Inc.com

REGISTERED PROFESSIONAL

NOT FOR CONSTRUCTION (CONCEPTUAL)

SUBCONSULTANT

PROJECT

Taunton Wastewater Treatment Facility Improvements

Taunton, MA

TITLE

Plumbing Details

NO.	REVISIONS	DATE

DRAWN BY:	RLB
DESIGNED BY:	RHB
CHECKED BY:	RHB
ISSUE DATE:	04/15/2020
BETA JOB NO.:	6050

SCALE

NONE

UNLESS OTHERWISE NOTED OR CHANGED BY REPRODUCTION

For Review Only

SHEET NO.

P-0.3

4/15/2020 12:02 PM W:\YEAR - 2018\18009.00 - TAUNTON WWTF UPGRADES\PLUMBING DEPARTMENT\18009.00 PHASE 1A PLUMBING LEGEND SCHEDULES DETAILS.DWG (BETA STB BW.STB)

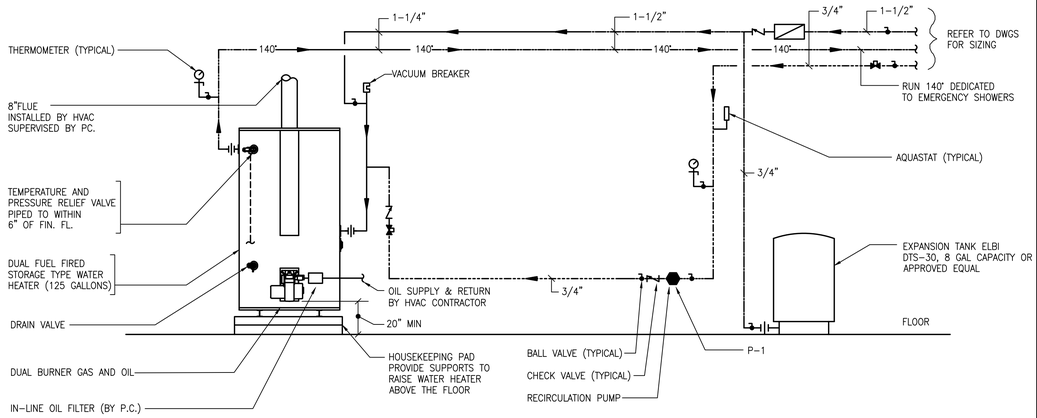

9 OIL FIRED WATER HEATER DETAIL

NTS

PREPARED BY

BETA
www.BETA-Inc.com

REGISTERED PROFESSIONAL

NOT FOR CONSTRUCTION (CONCEPTUAL)

SUBCONSULTANT

PROJECT

Taunton Wastewater Treatment Facility Improvements

Taunton, MA

TITLE

Plumbing Details

NO.	REVISIONS	DATE

DRAWN BY:	RLB
DESIGNED BY:	RHB
CHECKED BY:	RHB
ISSUE DATE:	04/15/2020
BETA JOB NO.:	6050

SCALE

NONE

UNLESS OTHERWISE NOTED OR CHANGED BY REPRODUCTION

For Review Only

SHEET NO.

P-0.4

4/15/2020 12:02 PM W:\YEAR - 2018\18009.00 - TAUNTON WWTF UPGRADES\PLUMBING DEPARTMENT\18009.00 PHASE 1A PLUMBING LEGEND SCHEDULES DETAILS.DWG (BETA STB BW.STB)

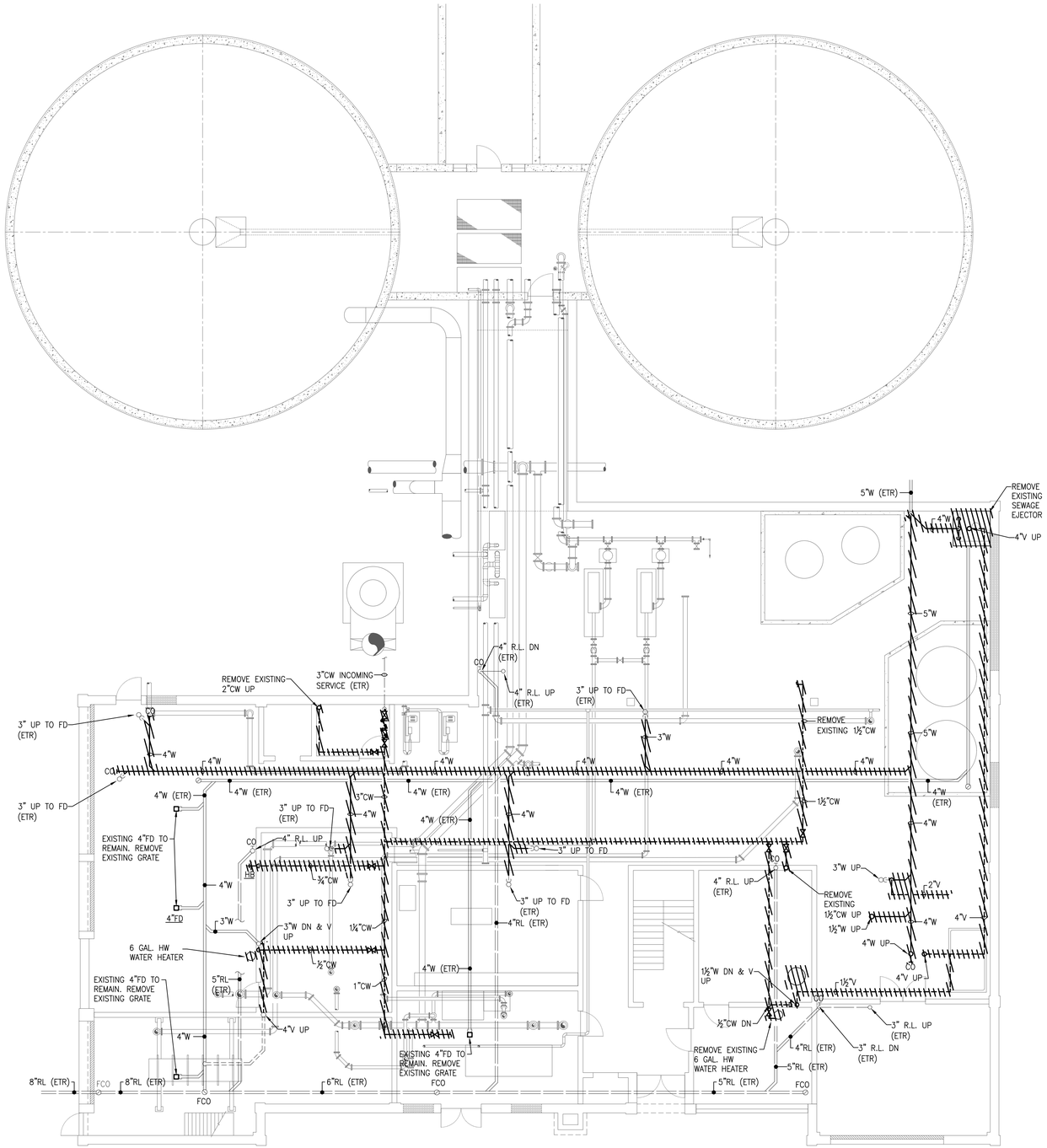

FIRST FLOOR - PLAN

SCALE: 1/8"= 1'-0"

PREPARED BY

BETA
www.BETA-Inc.com

REGISTERED PROFESSIONAL

NOT FOR CONSTRUCTION (CONCEPTUAL)

SUBCONSULTANT

PROJECT

Taunton Wastewater Treatment Facility Improvements

Taunton, MA

TITLE

Plumbing Solids Handling Building First Floor Demolition Plan

NO.	REVISIONS	DATE

DRAWN BY:	RLB
DESIGNED BY:	RLB
CHECKED BY:	JL
ISSUE DATE:	04/15/2020
BETA JOB NO.:	6050

SCALE

AS SHOWN

UNLESS OTHERWISE NOTED OR CHANGED BY REPRODUCTION

For Review Only

SHEET NO.

P-7.1

4/15/2020 1:44 PM W:\YEAR - 2018\18009.00 - TAUNTON WWTF UPGRADES\PLUMBING DEPARTMENT\18009.00 PHASE 1A PLUMBING SOLIDS HANDLING BUILDING & TANKS.DWG (BETA STB BW.STB)

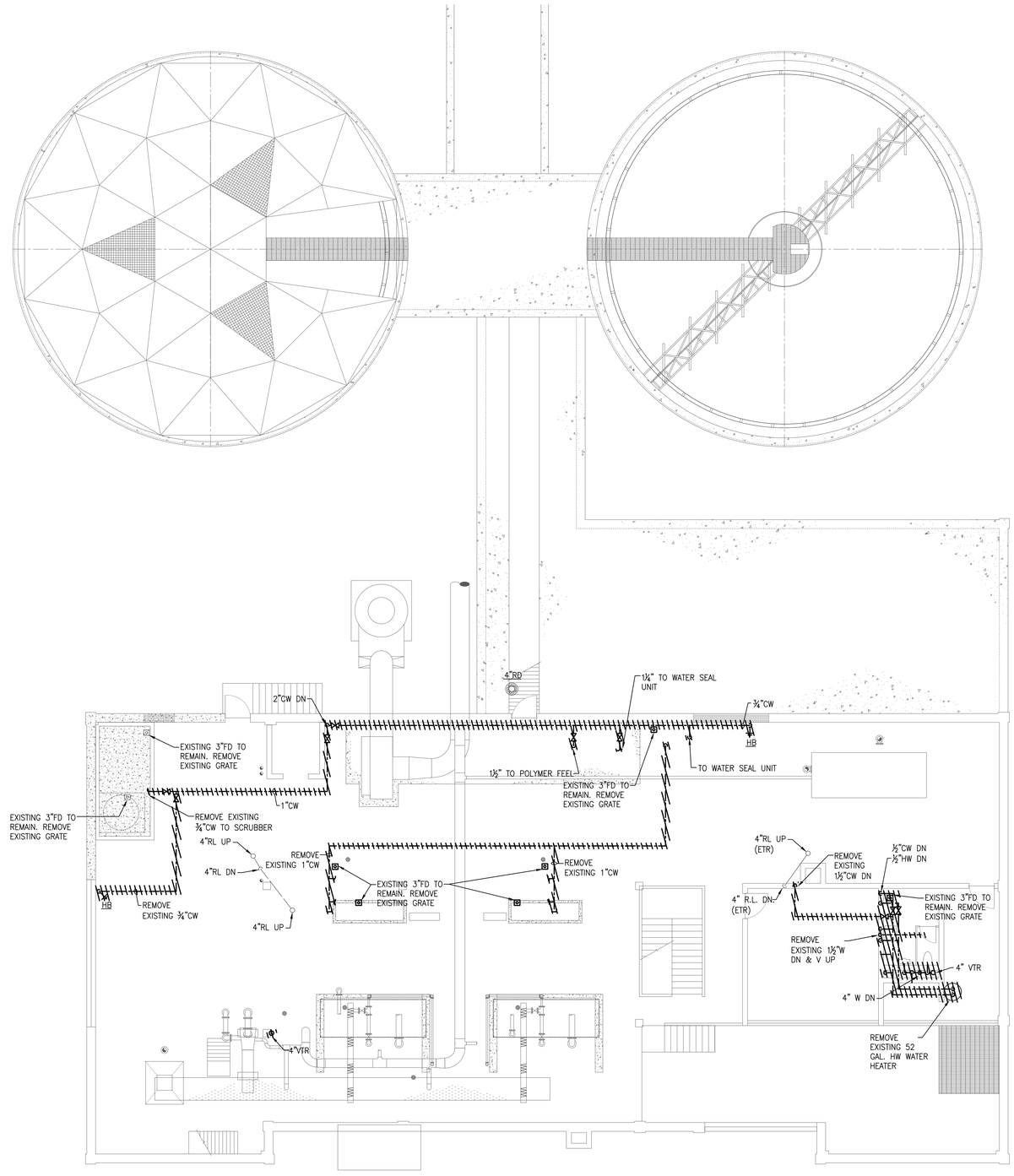

SECOND FLOOR - PLAN

SCALE: 1/8"= 1'-0"

PREPARED BY

BETA
www.BETA-Inc.com

REGISTERED PROFESSIONAL

NOT FOR CONSTRUCTION (CONCEPTUAL)

SUBCONSULTANT

PROJECT

Taunton Wastewater Treatment Facility Improvements

Taunton, MA

TITLE

Plumbing Solids Handling Building Second Floor Demolition Plan

NO.	REVISIONS	DATE

DRAWN BY:	RLB
DESIGNED BY:	RLB
CHECKED BY:	JL
ISSUE DATE:	04/15/2020
BETA JOB NO.:	6050

SCALE

AS SHOWN

UNLESS OTHERWISE NOTED OR CHANGED BY REPRODUCTION

For Review Only

SHEET NO.

P-7.2

4/15/2020 1:45 PM W:\YEAR - 2018\18009.00 - TAUNTON WWTF UPGRADES\PLUMBING DEPARTMENT\18009.00 PHASE 1A PLUMBING SOLIDS HANDLING BUILDING & TANKS.DWG (BETA STB BW.STB)

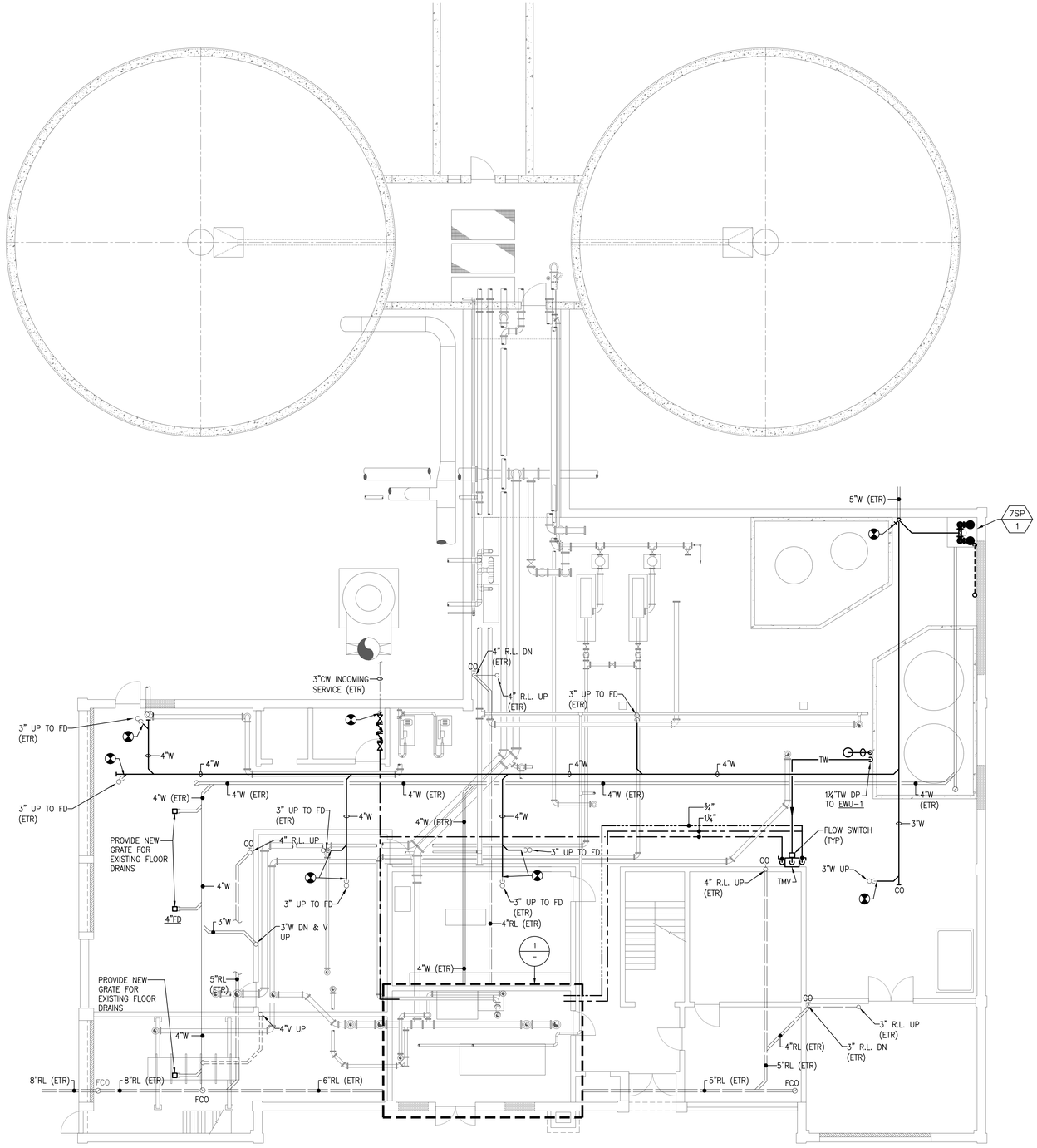

FIRST FLOOR - PLAN

SCALE: 1/8"= 1'-0"

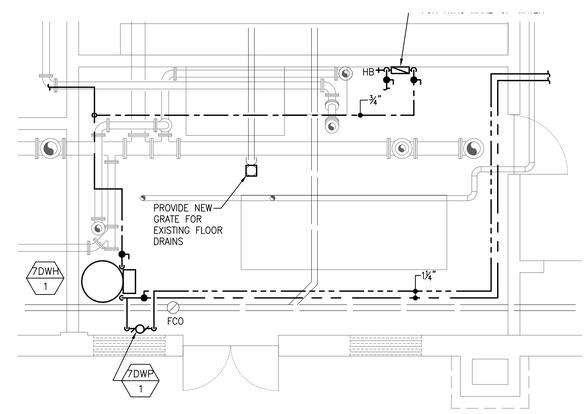

BOILER ROOM PART PLAN

SCALE: 1/4"= 1'-0"

PREPARED BY

BETA
www.BETA-Inc.com

REGISTERED PROFESSIONAL

NOT FOR CONSTRUCTION (CONCEPTUAL)

SUBCONSULTANT

PROJECT

Taunton Wastewater Treatment Facility Improvements

Taunton, MA

TITLE

Plumbing Solids Handling Building First Floor New Work Plan

NO.	REVISIONS	DATE

DRAWN BY:	RLB
DESIGNED BY:	RLB
CHECKED BY:	JL
ISSUE DATE:	04/15/2020
BETA JOB NO.:	6050

SCALE

AS SHOWN

UNLESS OTHERWISE NOTED OR CHANGED BY REPRODUCTION

For Review Only

SHEET NO.

P-7.3

4/15/2020 1:45 PM W:\YEAR - 2018\18009.00 - TAUNTON WWTF UPGRADES\PLUMBING DEPARTMENT\18009.00 PHASE 1A PLUMBING SOLIDS HANDLING BUILDING & TANKS.DWG (BETA STB BW.STB)

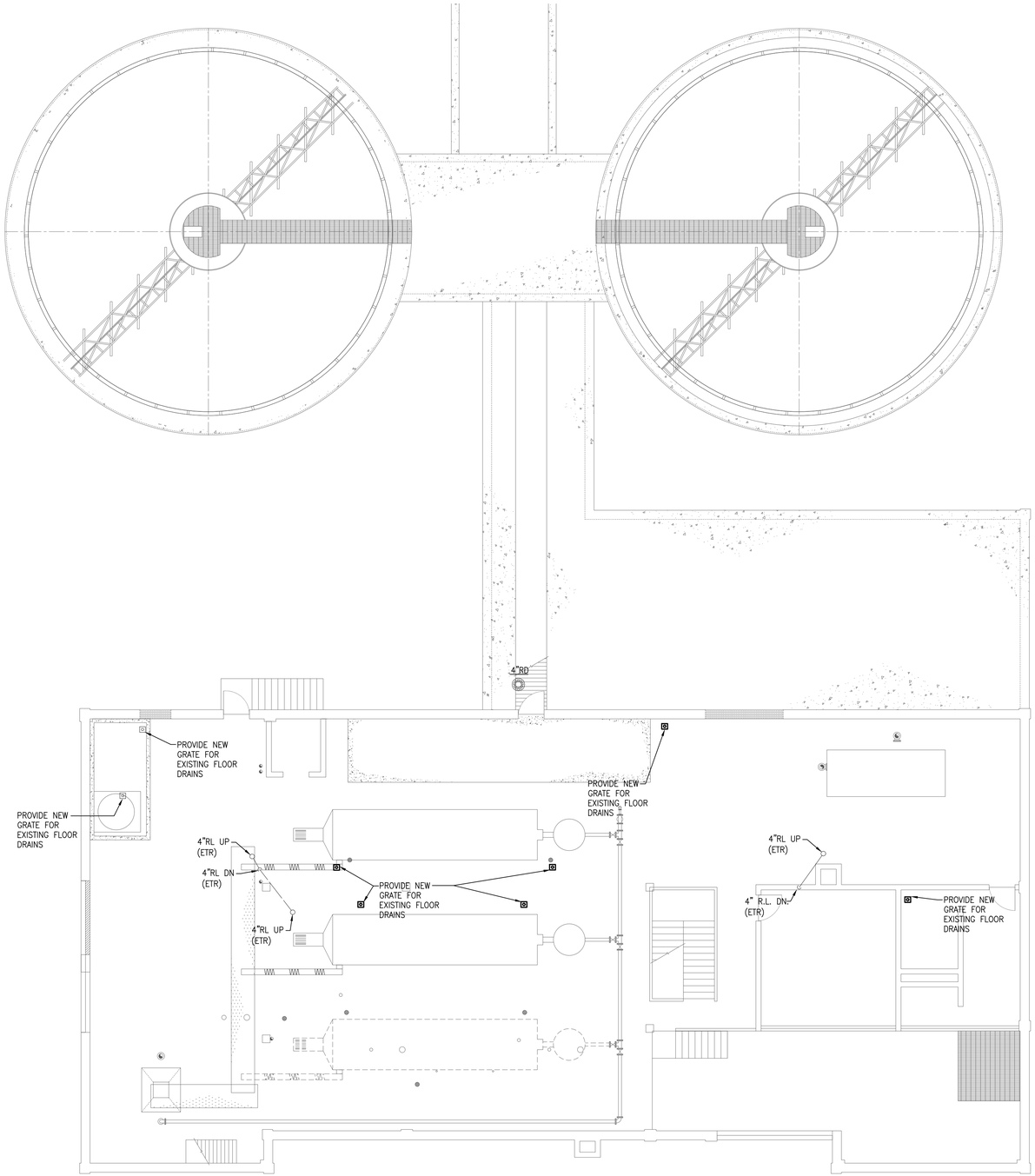

SECOND FLOOR - PLAN

SCALE: 1/8"= 1'-0"

PREPARED BY

BETA
www.BETA-Inc.com

REGISTERED PROFESSIONAL

NOT FOR CONSTRUCTION (CONCEPTUAL)

SUBCONSULTANT

PROJECT

Taunton Wastewater Treatment Facility Improvements

Taunton, MA

TITLE

Plumbing Solids Handling Building Second Floor New Work Plan

NO.	REVISIONS	DATE

DRAWN BY:	RLB
DESIGNED BY:	RLB
CHECKED BY:	JL
ISSUE DATE:	04/15/2020
BETA JOB NO.:	6050

SCALE

AS SHOWN

UNLESS OTHERWISE NOTED OR CHANGED BY REPRODUCTION

For Review Only

SHEET NO.

P-7.4

4/15/2020 1:46 PM W:\YEAR - 2018\18009.00 - TAUNTON WWTF UPGRADES\PLUMBING DEPARTMENT\18009.00 PHASE 1A PLUMBING SOLIDS HANDLING BUILDING & TANKS.DWG (BETA STB BW.STB)

ELECTRICAL SYMBOLS

F1 / 1 a	LINEAR LIGHTING FIXTURES "F1" INDICATES FIXTURE TYPE – TYPICAL FOR ALL FIXTURES "1" INDICATES CIRCUIT NUMBER – TYPICAL FOR ALL FIXTURE "a" INDICATES THE SWITCH CONTROL – TYPICAL FOR ALL FIXTURES
	WALL MOUNTED LIGHTING FIXTURE.
	SURFACE OR PENDANT MOUNTED FIXTURE.
	EMERGENCY EXIT SIGN
	EMERGENCY LIGHTING BATTERY UNIT WITH TWO LIGHT HEADS
	REMOTE EMERGENCY LIGHTING UNIT WITH TWO LIGHTING HEADS PROVIDE 3/4", 2#10, 1#10GND TO NEAREST THE EMEGENCY LIGHTING BATTERY UNIT
S_a	SINGLE POLE SWITCH 120V, 20A "a" INDICATES THE SWITCH CONTROL
S_2	2–POLE SWITCH 120V, 20A 1 POLE FOR ROOM LIGHT FIXTURES, 1–POLE FOR EXHAUST FAN CONTROL
S_{3a}	3–WAY SWITCH 120V, 20A "a" INDICATES THE SWITCH CONTROL
S_{4a}	4–WAY SWITCH 120V, 20A "a" INDICATES THE SWITCH CONTROL
TC	DIGITAL TIME CLOCK SWITCH
1	DUPLEX RECEPTACLE, WEATHER–RESISTANT 120V, 20A WITH WEATHERPROOF COVER "1" INDICATES CIRCUIT NUMBER – TYPICAL FOR ALL RECEPTACLES
	DUPLEX RECEPTACLE 120V, 20A
	(2) DUPLEX (QUAD) RECEPTACLE 120V, 20A
30	UNFUSED DISCONNECT SWITCH, "30" INDICATES 30 AMP RATING, PROVIDE 3–POLE UNLESS OTHERWISE INDICATED.
F 20	FUSED DISCONNECT SWITCH, "20" INDICATES 20 AMP FUSE RATING, PROVIDE 3–POLE UNLESS OTHERWISE INDICATED.
	3–PHASE RECEPTACLE
MCP FVNR	WALL MOUNTED COMBINATION MOTOR STARTER WITH MOTOR CIRCUIT PROTECTOR, "FVNR" INDICATES TYPE OF MOTOR STARTER
VFD	ENCLOSED VARIABLE FREQUENCY DRIVE
Sm	MANUAL MOTOR STARTER 120V, 20A
J	JUNCTION BOX
HH	HAND HOLE
CR1	CONTROL RELAY, "CR1" REFERS TO RELAY NAME DESIGNATION
TR1	TIMING RELAY, "TR1" REFERS TO RELAY NAME DESIGNATION
	NORMALY OPEN RELAY CONTACT
	NORMALLY CLOSED RELAY CONTACT
	OPERATOR PUSH BUTTON NORMALLY OPEN CONTACT
	OPERATOR PUSH BUTTON NORMALLY CLOSED CONTACT
	PRESSURE SWITCH – CLOSES ON HIGH PRESSURE
	PRESSURE SWITCH – CLOSES ON LOW PRESSURE

ELECTRICAL SYMBOLS

	UNDERGROUND CONDUIT DUCT BANK
PP1(1)	HOMERUN DESIGNATION TO PANEL PP1 CIRCUIT #1, WITH THE FOLOWING CONDUIT/WIRES UNLESS OTHERWISE NOTED: • 3/4"C WITH 2#12, 1#12GND FOR 20AMP SINGLE PHASE CIRCUITS. • 3/4"C WITH 3#12, 1#12GND FOR 20AMP THREE PHASE CIRCUITS. • 3/4"C WITH 2#10, 1#10GND FOR 30AMP SINGLE PHASE CIRCUITS. • 3/4"C WITH 3#10, 1#10GND FOR 30AMP THREE PHASE CIRCUITS. • 3/4"C WITH 2#8, 1#10GND FOR 40AMP & 50AMP SINGLE PHASE CIRCUITS. • 3/4"C WITH 3#8, 1#10GND FOR 40AMP & 50AMP THREE PHASE CIRCUITS.
	EYS TYPE CONDUIT SEAL
SPD	SURGE PROTECTION DEVICE
	UTILITY POLE
20 100 GFCI	MOLDED CASE CIRCUIT BREAKER, 3–POLE UNLESS OTHERWISE INDICATED, "20" INDICATES TRIP AMPERE RATING, "100" INDCATES FRAME SIZE, "GFCI" INDICATES CIRCUIT BREAKER TO HAVE GROUND FAULT CIRCUIT INTERRUPT
EH	ELECTRIC HAND HOLE (REFER TO SITE DETAILS)
	3/4"ø X 10'–0" COPPER CLAD GROUND ROD
	BUILDING GROUNDING SYSTEM
10	MOTOR, "10" INDICATES HORSEPOWER RATING
XX	CABLE/CONDUIT DESIGNATION, "XX" REFERS CABLE CONDUIT REFERENCE, REFER TO CABLE/CONDUIT SCHEDULES.
OS–XXXX YYY	OPERATOR STATION (SUPPLIED BY OTHER DIV. 16), "XXXX" REFERS TO TAGNAME ID, HOA REFERS TO THE "YYY" REFERS TO THE TYPE OF OPERATOR STATION
XX–XXXX	UNLESS OTHERWISE NOTED INSTRUMENATION OR PROCESS EQUIPMENT (SUPPLIED BY OTHER DIVISIONS) "XX–XXXX" REFERS TO TAGNAME ID
E	GENERATOR EMERGENCY STOP
O	OCCUPIED/UNOCCUPIED SELECTOR SWITCH. (SUPPLIED BY DIV. 16)
T	THERMOSTAT (SUPPLIED BY DIV. 15)
M	MOTOR OPERATED DAMPER (SUPPLIED BY DIV. 15)
CUH 1 P11–LP (21)	EQUIPMENT CIRCUIT NUMBER DESIGNATION TO PANEL PP1–LP CIRCUIT #21,

GENERAL NOTES

1. GENERAL CONTRACTOR TO PROVIDE CONCRETE HOUSEKEEPING PADS ON ALL FLOOR AND GRADE MOUNTED ELECTRICAL EQUIPMENT, EQUIPMENT INDICATED ON THE DRAWINGS IS THE MINIMUM REQUIREMENT FOR HOUSEKEEPING PADS. ADDITIONAL PADS MAYBE REQUIRED BASED ON THE ELECTRICAL CONTRACTORS MOUNTING METHODS, ELECTRICAL CONTRACTOR SHALL COORDINATE WITH GENERAL CONTRACTOR FOR ALL HOUSEKEEPING PAD SIZES AND LOCATIONS.
2. ALL CONDUIT AND EQUIPMENT SHALL BE INSTALLED AND GROUNDED IN ACCORDANCE WITH THE LATEST EDITION OF THE NATIONAL ELECTRICAL CODE AND APPLICABLE LOCAL CODES.
3. BONDING JUMPERS, CONDUIT CLAMPS AND POINTS OF ATTACHMENT ARE NOT SHOWN ON DRAWINGS. SIZE BONDING JUMPERS IN ACCORDANCE WITH THE NATIONAL ELECTRICAL CODE. THE POINTS OF ATTACHMENT OF THE GROUND CLAMPS SHALL BE ACCESSIBLE LOCATIONS.
4. EQUIPMENT & CONDUIT INSTALLATIONS ARE SHOWN DIAGRAMMATICALLY ONLY AND SHALL BE INSTALLED IN A MANNER TO PREVENT CONFLICTS WITH EQUIPMENT AND STRUCTURAL CONDITIONS. EXPOSED CONDUITS SHALL BE INSTALLED PARALLEL TO BEAMS AND WALLS.
5. CONDUITS SHALL BE TERMINATED SO AS TO PERMIT NEAT CONNECTIONS TO MOTORS AND OTHER EQUIPMENT.
6. NO CONDUIT SMALLER THAN 3/4" PIPE SIZE NOR WIRE SMALLER THAN NO. 12 A.W.G. SHALL BE USED UNLESS OTHERWISE NOTED.
7. RECEPTACLES AND SWITCHES SHALL BE MOUNTED 45" ABOVE FINISHED FLOOR.
8. THE WIRING AND BLOCK DIAGRAMS, QUANTITY AND SIZE OF WIRES AND CONDUIT REPRESENT A SUGGESTED ARRANGEMENT BASED UPON SELECTED STANDARD COMPONENTS OF ELECTRICAL AND PROCESS EQUIPMENT. MODIFICATIONS ACCEPTABLE TO THE ENGINEER MAY BE MADE BY THE CONTRACTOR TO ACCOMMODATE EQUIPMENT ACTUALLY PURCHASED. THE BASIC SEQUENCE AND METHOD OF CONTROL MUST BE MAINTAINED AS INDICATED ON THE DRAWINGS AND/OR SPECIFICATIONS.

ELECTRICAL SYMBOLS

GDC	GAS DETECTION SYSTEM – CONTROL PANEL (SUPPLIED BY DIV. 17)
GD	GAS DETECTION SYSTEM – GAS SENSOR DETECTOR (SUPPLIED BY DIV. 17)
A	GAS DETECTION SYSTEM – AMBER ALARM BEACON (SUPPLIED BY DIV. 17)
H	GAS DETECTION SYSTEM – ALARM HORN (SUPPLIED BY DIV.17)
R	HIGH LEVEL RED ALARM BEACON (SUPPLIED BY DIV. 17)

FIRE ALARM SYSTEM SYMBOLS

F	MANUAL FIRE ALARM STATION
F	FIRE ALARM AUDIO/VISUAL DEVICE
	FIRE ALARM BEACON
S	SMOKE DETECTOR
S D	DUCT SMOKE DETECTOR
RTS	REMOTE TEST STATION AND ALARM FOR DUCT SMOKE DETECTOR
H	HEAT DETECTOR, COMBINATION RATE–OF–RISE AND FIXED TEMPERATURE
M	INPUT MONITORING MODULE
C	RELAY CONTROL MODULE
FACP	FIRE ALARM CONTROL PANEL
FAA	FIRE ALARM ANNUNCIATOR PANEL
	REMOTE ALARM INDICATING LIGHT

DEMOLITION NOTES

1. UNLESS OTHERWISE NOTED, ALL EXISTING ELECTRICAL SYSTEMS (POWER, LIGHTING, LOW VOLTAGE, CONTROLS, ETC) AND ASSOCIATED EQUIPMENT IS TO BE DEMOLISHED OR SALVAGED. DISCONNECT AND DE–ENERGIZE THE EQUIPMENT. REMOVE THE EQUIPMENT TO BE DEMOLISHED OR SALVAGED PER SECTION 02050. ALL CONTROL DEVICES, CONDUIT, CABLING, BOXES, SUPPORTS, ETC, ASSOCIATED WITH THE DEMOLISHED EQUIPMENT SHALL BE REMOVED. THE CONDUIT AND CABLING SHALL BE REMOVED BACK TO SOURCE.
2. NO DEVICE OR EQUIPMENT INDICATED FOR DEMOLITION WILL BE REUSED OR SALVAGED UNLESS SPECIFICALLY NOTED AS SUCH. ALL EQUIPMENT REMOVED SHALL BE REMOVED FROM SITE AND PROPERLY DISPOSED OF, PRIOR TO REMOVAL OF EQUIPMENT COORDINATE WITH OWNER FOR ANY EQUIPMENT THE OWNER WILL KEEP.
3. EXISTING EQUIPMENT INDICATED ON THE DEMOLITION PLANS ARE BASED ON SITE OBSERVATIONS AND IT IS NOT THE INTENTION OF THESE DRAWINGS TO SHOW ALL EQUIPMENT AND MATERIALS TO BE DISCONNECTED AND/OR REMOVED.

ABBREVIATIONS

(2)1"C, 3#8, #10GND	2, 1–INCH CONDUITS EACH CONDUIT CONTAINING 3–#8 AWG WIRES AND 1–#10 GROUND CONDUCTOR
3/4" CE	EMPTY CONDUIT. NUMERAL DENOTES SIZE
AFF	ABOVE FINISHED FLOOR
AFG	ABOVE FINISHED GRADE
AR	ALARM RELAY
ATS	AUTOMATIC TRANSFER SWITCH
CR	CONTROL RELAY
CP	CONTROL PANEL
DRG. DWG.	DRAWING
EAN	EXCEPT AS NOTED
EC	ELECTRICAL CONTRACTOR
ETM	ELAPSED TIME METER
FE	FLOW ELEMENT
FIT	FLOW INDICATOR TRANSMITTER
FS	FLOW SWITCH
FT	FLOW TRANSMITTER
FVNR	FULL VOLTAGE NON–REVERSING
GND, GRD	GROUNDING CONDUCTOR (EQUIPMENT)
HOA	HAND–OFF–AUTOMATIC
HH	HANDHOLE
J OR JB	JUNCTION BOX
JPB	JOG PUSHBUTTON
LE	LEVEL ELEMENT
LIT	LEVEL INDICATOR TRANSMITTER
LL	LOW LEVEL
LS	LEVEL SWITCH
LT	LEVEL TRANSMITTER
MC	MOTOR CONTROLLER (STARTER)
MCC	MOTOR CONTROL CENTER
MH	MANHOLE
MFR	MANUFACTURER
NTS	NOT TO SCALE
OH	OVERHEAD
OL	MOTOR OVERLOAD HEATER
PB	PUSHBUTTON CONTROL STATION MOMENTARY CONTACT TYPE, STOP START
PBE	PUSHBUTTON CONTROL STATION MAINTAINED EMERGENCY STOP TYPE, TWIST TO RELEASE
PBL	PUSHBUTTON CONTROL STATION MOMENTARY TYPE WITH LOCK–OUT DEVICE, STOP–START
PBM	PUSHBUTTON CONTROL STATION MAINTAINED CONTACT TYPE, STOP START
PIT	PRESSURE INDICATOR TRANSMITTER
PL	PUSHBUTTON CONTROL STATION MOMENTARY TYPE WITH LOCK–OUT DEVICE, STOP
PS	PRESSURE SWITCH
PT	PRESSURE TRANSMITTER
RGS	RIGID GALVANIZED STEEL
RVNR	REDUCED VOLTAGE NON–REVERSING
SPD	SURGE SUPPRESSOR DEVICE
SOV	SOLENOID VALVE
S/S	SOFT STARTER
TB	TERMINAL BOX
TD	MOTOR TEMPERATURE DETECTOR
TR	TIMING RELAY
TS	TEMPERATURE SWITCH
TSP	TWISTED SHEILDED PAIR
TSTW	TWO SPEED TWO WINDING
TYP	TYPICAL
UG	UNDERGROUND
VFD	VARIABLE FREQUENCY DRIVE
WP	WATER PROOF

PREPARED BY

BETA
www.BETA-Inc.com

REGISTERED PROFESSIONAL

NOT FOR CONSTRUCTION (CONCEPTUAL)

SUBCONSULTANT

PROJECT

Taunton Wastewater Treatment Facility Improvements

Taunton, MA

TITLE

ELECTRICAL LEGEND AND NOTES

NO.	REVISIONS	DATE

DRAWN BY:	RB
DESIGNED BY:	MC
CHECKED BY:	MC
ISSUE DATE:	04/15/2020
BETA JOB NO.:	6050

SCALE

UNLESS OTHERWISE NOTED OR CHANGED BY REPRODUCTION

For Review Only

SHEET NO.

E-1

4/15/2020 2:00 PM W:\YEAR - 2018\18009.00 - TAUNTON WWTF UPGRADES\ELECTRICAL DEPARTMENT\18009.00 ELEC LEGEND.DWG (BETA STB BW.STB)

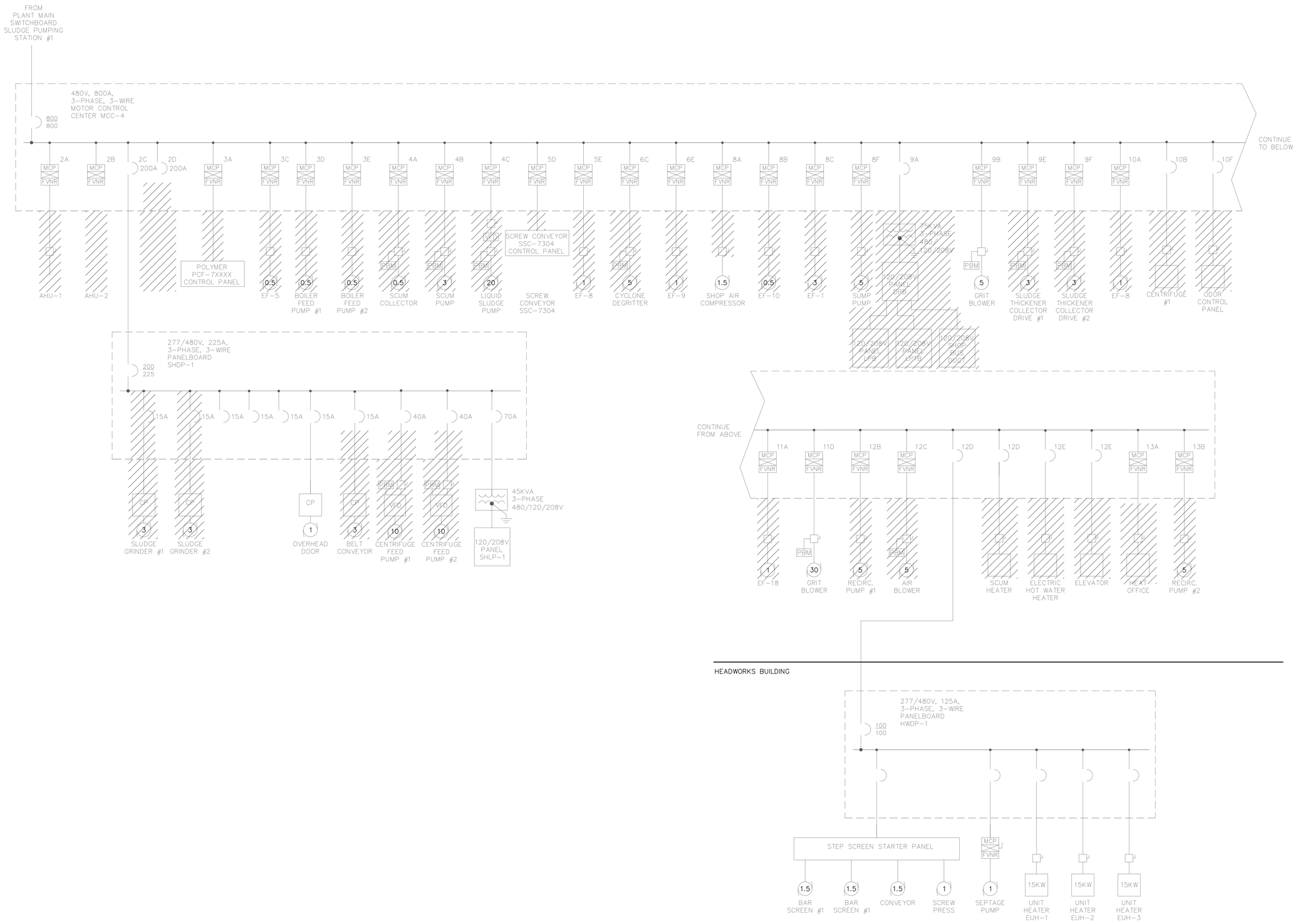

ONE LINE DIAGRAM – DEMOLITION

NOT TO SCALE

PREPARED BY

BETA

www.BETA-Inc.com

REGISTERED PROFESSIONAL

NOT FOR CONSTRUCTION (CONCEPTUAL)

SUBCONSULTANT

PROJECT

Taunton Wastewater Treatment Facility Improvements

Taunton, MA

TITLE

ELECTRICAL ONE LINE DIAGRAM DEMOLITION

NO.	REVISIONS	DATE

DRAWN BY:	RB
DESIGNED BY:	MC
CHECKED BY:	MC
ISSUE DATE:	04/15/2020
BETA JOB NO.:	6050

SCALE

UNLESS OTHERWISE NOTED OR CHANGED BY REPRODUCTION

For Review Only

SHEET NO.

E-0.2

4/15/2020 2:01 PM W:\YEAR - 2018\18009.00 - TAUNTON WWTF UPGRADES\ELECTRICAL DEPARTMENT\PHASE IA\18009.00 ELEC ONE LINE - PHASE 1A.DWG (BETA STB BW.STB)

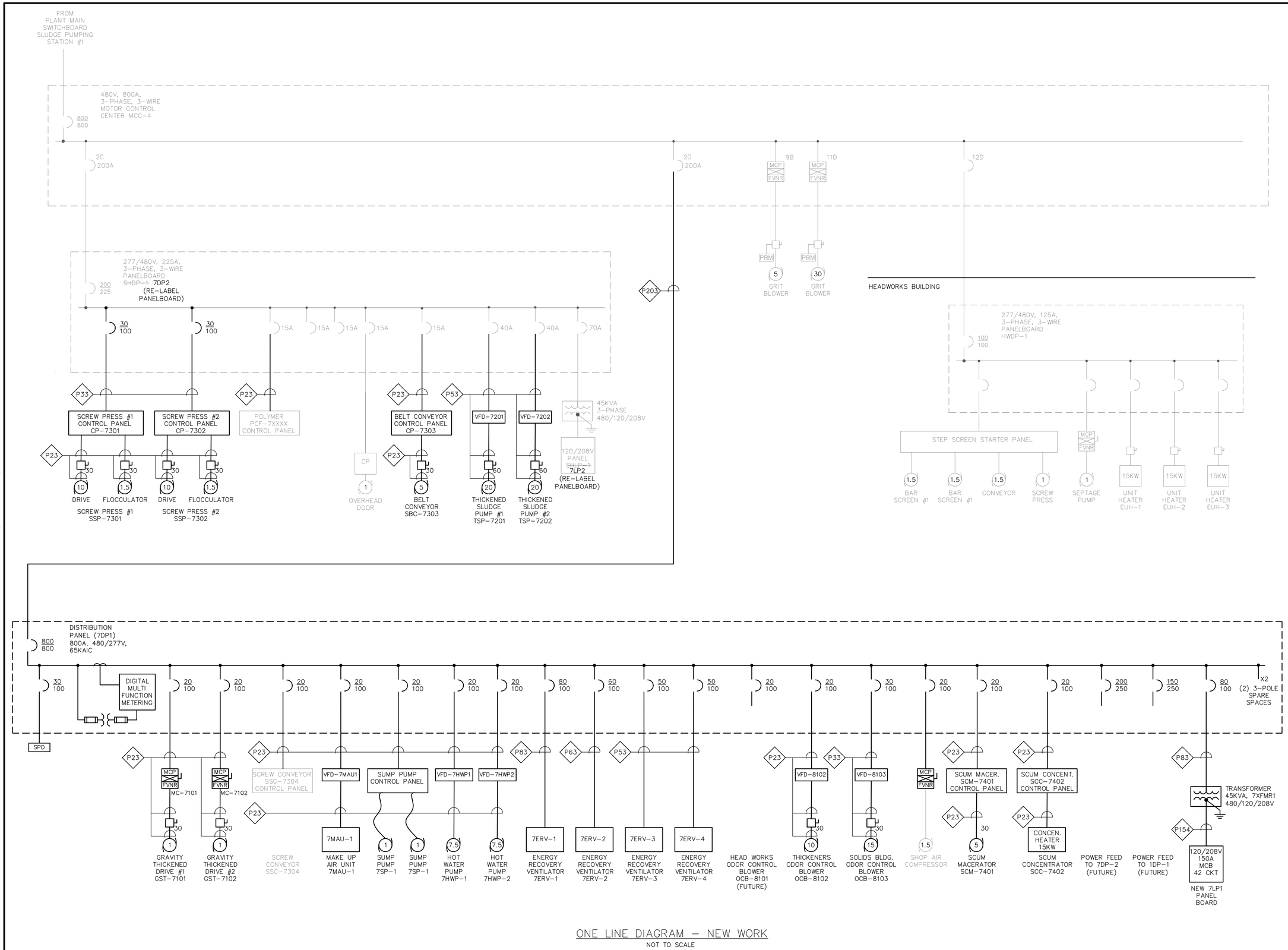

ONE LINE DIAGRAM – NEW WORK

NOT TO SCALE

PREPARED BY

BETA
www.BETA-Inc.com

REGISTERED PROFESSIONAL

NOT FOR CONSTRUCTION (CONCEPTUAL)

SUBCONSULTANT

PROJECT

Taunton Wastewater Treatment Facility Improvements

Taunton, MA

TITLE

ELECTRICAL ONE LINE DIAGRAM NEW WORK

NO.	REVISIONS	DATE

DRAWN BY:	RB
DESIGNED BY:	MC
CHECKED BY:	MC
ISSUE DATE:	04/15/2020
BETA JOB NO.:	6050

SCALE

UNLESS OTHERWISE NOTED OR CHANGED BY REPRODUCTION

For Review Only

SHEET NO.

E-0.3

4/15/2020 2:04 PM W:\YEAR - 2018\18009.00 - TAUNTON WWTF UPGRADES\ELECTRICAL DEPARTMENT\PHASE 1A\18009.00 ELEC ONE LINE - PHASE 1A.DWG (BETA STB BW.STB)

LIGHTING FIXTURE SCHEDULE

TYPE	DESCRIPTION	MANUFACTURER & CATALOG SERIES	LAMPS TYPE	LAMPS LUMENS	VOLTS	WATTS	MOUNTING TYPE	MOUNTING HEIGHT	REMARKS
F1	96" LED ENCLOSED AND GASKETED INDUSTRIAL LIGHTING FIXTURE.	LITHONIA FEM-L96-12000LM-IMAFL-MVOLT-35K-80CRI	LED 3500K	6000lm	120	45	PENDANT	13'-5"ABOVE FINISHED FLOOR UNLESS OTHERWISE NOTED	
F2	48" LED ENCLOSED AND GASKETED INDUSTRIAL LIGHTING FIXTURE.	LITHONIA FEM-L48-4000LM-IMAFL-MVOLT-35K-80CRI	LED 3500K	4000lm	120	31	PENDANT	13'-5"ABOVE FINISHED FLOOR UNLESS OTHERWISE NOTED	
F3	48" LED ENCLOSED AND GASKETED INDUSTRIAL LIGHTING FIXTURE.	LITHONIA FEM-L48-4000LM-IMAFL-MVOLT-35K-80CRI	LED 3500K	4000lm	120	31	SURFACE		
W1	EXTERIOR BUILDING MOUNTED LED WALL PACK LIGHT FIXTURE	LITHONIA TWP-LED-20C-700-50K-T3M-120-PE-DDXB	LED 5000K	4200lm	120	45	WALL		FIXTURE CIRCUIT TO BE CONNECTED TO AND CONTROLLED BY A TIME CLOCK SWITCH
W2	EXTERIOR BUILDING MOUNTED LED MINI WALL PACK LIGHT FIXTURE	LITHONIA TWS-LED-P1-50K	LED 5000K	1476lm	120	25	WALL		FIXTURE CIRCUIT TO BE CONNECTED TO AND CONTROLLED BY A TIME CLOCK SWITCH
	SELF CONTAINED EMERGENCY LIGHTING BATTERY UNIT NEMA 4 WITH TWO LIGHTING HEADS	REFER TO SPECIFICATIONS	LED	–	120	8W	WALL		INSTALL 3/4"C, 2#12, 1#12GND TO REMOTE HEADS
	SEALED-BEAM WEATHERPROOF REMOTE LIGHTING FIXTURE WITH TWO LIGHTING HEADS	REFER TO SPECIFICATIONS	LED	–	120	8W	WALL		
	EMERGENCY EXIT SIGN LED TYPE WITH BATTERY BACK-UP NEMA 4X	REFER TO SPECIFICATIONS	LED	–	120	3W	WALL		

LIGHTING FIXTURE SCHEDULES NOTES:

1. THE CATALOG NUMBERS LISTED ARE GIVEN AS A GUIDE TO THE DESIGN AND QUALITY OF FIXTURE DESIRED. EQUIVALENT DESIGNS, MATERIALS, DIMENSIONS, COEFFICIENT OF UTILIZATIONS AND EQUAL QUALITY FIXTURES OF OTHER MANUFACTURERS WILL BE ACCEPTABLE.

POWER CABLE/CONDUIT SCHEDULE

SYMBOL	CONDUIT SIZE*	CONDUCTORS*	GND*
P22	3/4"	(2)#12	(1)#12
P23	3/4"	(3)#12	(1)#12
P32	3/4"	(2)#10	(1)#10
P33	3/4"	(3)#10	(1)#10
P53	3/4"	(3)#8	(1)#10
P54	3/4"	(4)#8	(1)#10
P63	1"	(3)#6	(1)#8
P64	1"	(4)#6	(1)#8
P83	1 1/4"	(3)#4	(1)#8
P84	1 1/4"	(4)#4	(1)#8
P103	1 1/2"	(3)#3	(1)#6
P104	1 1/2"	(4)#3	(1)#6
P113	1 1/2"	(3)#2	(1)#6
P114	1 1/2"	(4)#2	(1)#6
P133	2"	(3)#1	(1)#6
P134	2"	(4)#1	(1)#6
P153	2"	(3)#1/0	(1)#6
P154	2"	(4)#1/0	(1)#6
P173	2 1/2"	(3)#2/0	(1)#6
P174	2 1/2"	(4)#2/0	(1)#6
P203	2 1/2"	(3)#3/0	(1)#4
P204	2 1/2"	(4)#3/0	(1)#4
P233	3"	(3)#4/0	(1)#4
P234	3"	(4)#4/0	(1)#4
P284	4"	(4)500KCMIL	(1)#2/0

SIGNAL CABLE/CONDUIT SCHEDULE

SYMBOL	CONDUIT SIZE	CONDUCTORS
S	1"	VENDER SPECIFIED
S1	3/4"	1-2/C#16 TSP
S13	3/4"	1-3/C#16 TSP
S2	3/4"	2-2/C#16 TSP
S23	3/4"	2-3/C#16 TSP
S3	1"	3-2/C#16 TSP
S33	1"	3-3/C#16 TSP
S4	1"	4-2/C#16 TSP
S5	1"	5-2/C#16 TSP
S6	1 1/2"	6-2/C#16 TSP
S7	1 1/2"	7-2/C#16 TSP
S8	1 1/2"	8-2/C#16 TSP
S9	1 1/2"	9-2/C#16 TSP
S10	2"	10-2/C#16 TSP
TC1	3/4"	8/C#18

TELE/DATA CABLE/CONDUIT SCHEDULE

SYMBOL	CONDUIT SIZE	CONDUCTORS
TD1	1"	1-CAT6 CABLE
TD2	1"	2-CAT6 CABLE

CONTROL CABLE/CONDUIT SCHEDULE

SYMBOL	CONDUIT SIZE	CONDUCTORS
C2	3/4"	2#14
C4	3/4"	4#14
C5	3/4"	5#14
C6	3/4"	6#14
C7	3/4"	7#14
C8	3/4"	8#14
C9	3/4"	9#14
C10	3/4"	10#14
C12	3/4"	12#14
C16	1"	16#14
C20	1"	20#14
C30	1"	30#14

NOTE: CONDUIT AND CONDUCTOR SIZES ARE TO BE PER THE ABOVE SCHEDULES UNLESS OTHERWISE NOTED.

PANELBOARD SCHEDULE

NO. 7LP1 LOCATION: CONTROL ROOM

208/120 V, 3 PH, 4 W, 100 A MAINS — 100 A SOLID NEUTRAL — 100 A MCB

10,000 AIC AT 120 V — 100 A GROUND BUS — – A MLO — SURFACE MOUNTING

CIRCUIT	DESCRIPTION OF LOAD	LOAD (KVA) Aø	Bø	Cø	BREAKER TRIP	POLE	BREAKER POLE	TRIP	LOAD (KVA) Aø	Bø	Cø	DESCRIPTION OF LOAD	CIRCUIT
1	FIRST FLOOR LIGHTING	–			20	1	1	20	0.5			FLOW METERS	2
3	2ND FLOOR LIGHTING		–		20	1	1	20		0.5		LEVEL TRANSMITTERS	4
5	EXTERIOR LIGHTING			–	20	1	1	20			1.07	FIRST FLOOR UNIT HEATERS	6
7	SPARE	–			20	1	1	20	1.25			SECOND FLOOR UNIT HEATERS	8
9	SPARE		–		20	1	1	20		0.10		DOMESTIC WATER HEATER	10
11	SPARE			–	20	1	1	20			–	DOMESTIC RECIRC PUMP	12
13	SPARE	–			20	1	1	20	0.5			FIRE ALARM CONTROL PANEL 7FACP	14
15	SPARE		–		20	1	1	20		–		SPARE	16
17	SPARE			–	20	1	1	20			–	SPARE	18
19	SPARE	–			20	1	1	20	–			SPARE	20
21	SPARE		–		20	1	1	20		–		SPARE	22
23	SPARE			–	20	1	1	20			–	SPARE	24
25	SPARE	–			20	1	1	20	–			SPARE	26
27	SPARE		–		20	1	1	20		–		SPARE	28
29	SPARE			–	20	1	1	20			–	SPARE	30
31	SPARE	–			20	1	1	20	–			SPARE	32
33	SPARE		–		20	1	1	20		–		SPARE	34
35	SPARE			–	20	1	1	20			1.0	GENERATOR ALTERNATOR HEATER & BATTERY HEATER	36
37	SPARE	–			20	1	1	20	0.5			GENERATOR BATTERY CHARGER	38
39	BOILER		–		20	2	2	20		1.5		GENERATOR JACKET HEATER	40
41				–							1.5		42
SUB-TOTAL CONNECTED		–	–	–					–	–	–	SUB-TOTAL CONNECTED	

*PROVIDE GFCI BREAKER

SUB-TOTAL CONNECTED KVA Aø = –

SUB-TOTAL CONNECTED KVA Bø = –

SUB-TOTAL CONNECTED KVA Cø = –

TOTAL CONNECTED KVA = –

PREPARED BY

BETA
www.BETA-Inc.com

REGISTERED PROFESSIONAL

NOT FOR CONSTRUCTION (CONCEPTUAL)

SUBCONSULTANT

PROJECT

Taunton Wastewater Treatment Facility Improvements

Taunton, MA

TITLE

ELECTRICAL SCHEDULES

NO.	REVISIONS	DATE

DRAWN BY:	RB
DESIGNED BY:	MC
CHECKED BY:	MC
ISSUE DATE:	04/15/2020
BETA JOB NO.:	6050

SCALE

UNLESS OTHERWISE NOTED OR CHANGED BY REPRODUCTION

For Review Only

SHEET NO. E-0.4

4/15/2020 2:04 PM W:\YEAR - 2018\18009.00 - TAUNTON WWTF UPGRADES\ELECTRICAL DEPARTMENT\PHASE IA\18009.00 ELEC DIAGRAMS AND DETAILS - 1A.DWG (BETA STB BW.STB)

INTENTIONALLY LEFT BLANK
NEED INFORMATION FROM
BETA ON CONTROL PANELS
AND FIELD DEVICES

CONTROL BLOCK WIRING DIAGRAM
SCREW PRESSES & BELT CONVEYOR
NOT TO SCALE

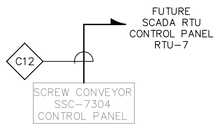

CONTROL BLOCK WIRING DIAGRAM
SCREW CONVEYOR
NOT TO SCALE

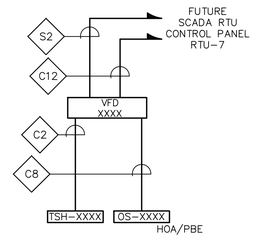

CONTROL BLOCK WIRING DIAGRAM
ODOR CONTROL BLOWERS
NOT TO SCALE

TYPICAL FOR:

- VFD-8102/OS-8102/TSH-8102
- VFD-8103/OS-8103/TSH-8103

INTENTIONALLY LEFT BLANK
NEED INFORMATION FROM
BETA ON CONTROL PANELS
AND FIELD DEVICES

CONTROL BLOCK WIRING DIAGRAM
SCUM MACERATOR & SCUM CONCENTRATOR
NOT TO SCALE

INTENTIONALLY LEFT BLANK
NEED FIELD INVESTIGATION
ON CONTROL PANEL, PUMPS
AND FIELD DEVICES

CONTROL BLOCK WIRING DIAGRAM
POLYMER SYSTEM
NOT TO SCALE

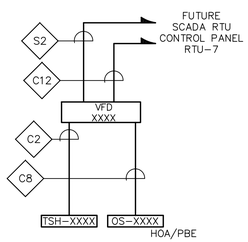

CONTROL BLOCK WIRING DIAGRAM
BLOWERS
NOT TO SCALE

TYPICAL FOR:

- VFD-8101/OS-8101/TSH-8101
- VFD-8102/OS-8102/TSH-8102

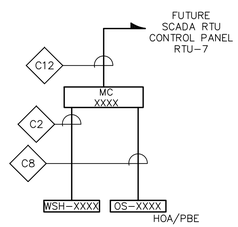

CONTROL BLOCK WIRING DIAGRAM
GRAVITY THICKENER DRIVES
NOT TO SCALE

TYPICAL FOR:

- VFD-7101/OS-7101/WSH-7101
- VFD-7102/OS-7102/WSH-7102

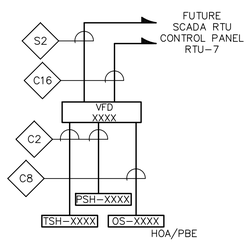

CONTROL BLOCK WIRING DIAGRAM
THICKENED SLUDGE PUMPS
NOT TO SCALE

TYPICAL FOR:

- VFD-7201/OS-7201/PSH-7201/TSH-7201
- VFD-7202/OS-7202/PSH-7202/TSH-7202

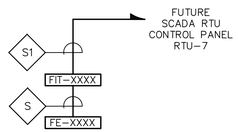

CONTROL BLOCK WIRING DIAGRAM
FLOW METERS
NOT TO SCALE

TYPICAL FOR:

- FE-7203/FIT-7203
- FE-7204/FIT-7204

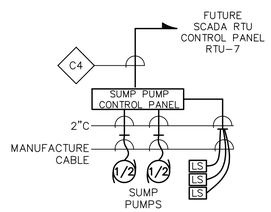

SUMP PUMP BLOCK WIRING DIAGRAM
NOT TO SCALE

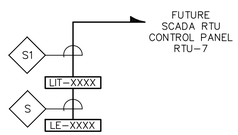

CONTROL BLOCK WIRING DIAGRAM
LEVEL TRANSMITTERS
NOT TO SCALE

TYPICAL FOR:

- LE-7101/LIT-7101
- LE-7102/LIT-7102

PREPARED BY

BETA
www.BETA-Inc.com

REGISTERED PROFESSIONAL

NOT FOR
CONSTRUCTION
(CONCEPTUAL)

SUBCONSULTANT

PROJECT

Taunton Wastewater Treatment Facility Improvements

Taunton, MA

TITLE

ELECTRICAL
WIRING
DIAGRAMS

NO.	REVISIONS	DATE

DRAWN BY:	RB
DESIGNED BY:	MC
CHECKED BY:	MC
ISSUE DATE:	04/15/2020
BETA JOB NO.:	6050

SCALE

UNLESS OTHERWISE NOTED OR CHANGED BY REPRODUCTION

For Review Only

SHEET NO.

E-0.5

4/15/2020 2:06 PM W:\YEAR - 2018\18009.00 - TAUNTON WWTF UPGRADES\ELECTRICAL DEPARTMENT\PHASE IA\18009.00 ELEC DIAGRAMS AND DETAILS - 1A.DWG (BETA STB BW.STB)

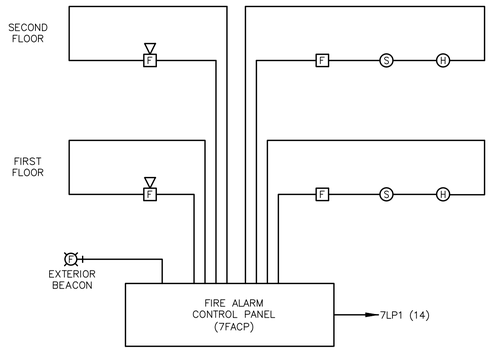

FIRE ALARM RISER DIAGRAM

NOT TO SCALE

FIRE ALARM NOTES:

1. RISER DIAGRAM ONLY REPRESENTS TYPE OF DEVICES WITHIN AN AREA AND DOES NOT REPRESENT ACTUAL QUANTITIES. REFER TO PLAN DRAWINGS FOR EXACT QUANTITIES AND LOCATIONS OF DEVICES.
2. MINIMUM SIZE CONDUIT SHALL BE 3/4" UNLESS NOTED OTHERWISE.
3. SYSTEM CONDUIT/CABLING SHALL BE INSTALLED IN ACCORDANCE WITH EQUIPMENT SUPPLIERS APPROVED SHOP DRAWINGS AND WIRING DIAGRAMS.
4. PROVIDE RED COLORED CIRCUIT BREAKER HANDLE LOCK ON POWER CIRCUIT. HANDLE LOCK SHALL ALLOW THE CIRCUIT BREAKER TO TRIP, BUT PREVENT SWITCHING OF THE CIRCUIT BREAKER TO THE "OFF" POSITION.
5. ALL COMPONENTS OF THE SYSTEM SHALL BE MOUNTED IN ACCORDANCE WITH ADA REQUIREMENTS.
6. THE FIRE ALARM SYSTEM SHALL BE ADDRESSABLE TYPE. CONTRACTOR TO PROVIDE THE NECESSARY INTERFACE MODULES FOR THE FIRE ALARM DEVICES THAT REQUIRES THEM.

PREPARED BY

BETA
www.BETA-Inc.com

REGISTERED PROFESSIONAL

NOT FOR CONSTRUCTION (CONCEPTUAL)

SUBCONSULTANT

PROJECT

Taunton Wastewater Treatment Facility Improvements

Taunton, MA

TITLE

ELECTRICAL WIRING DIAGRAMS

NO.	REVISIONS	DATE

DRAWN BY:	RB
DESIGNED BY:	MC
CHECKED BY:	MC
ISSUE DATE:	04/15/2020
BETA JOB NO.:	6050

SCALE

UNLESS OTHERWISE NOTED OR CHANGED BY REPRODUCTION

For Review Only

SHEET NO.

E-0.6

4/15/2020 2:07 PM W:\YEAR - 2018\18009.00 - TAUNTON WWTF UPGRADES\ELECTRICAL DEPARTMENT\PHASE IA\18009.00 ELEC DIAGRAMS AND DETAILS - 1A.DWG (BETA STB BW.STB)

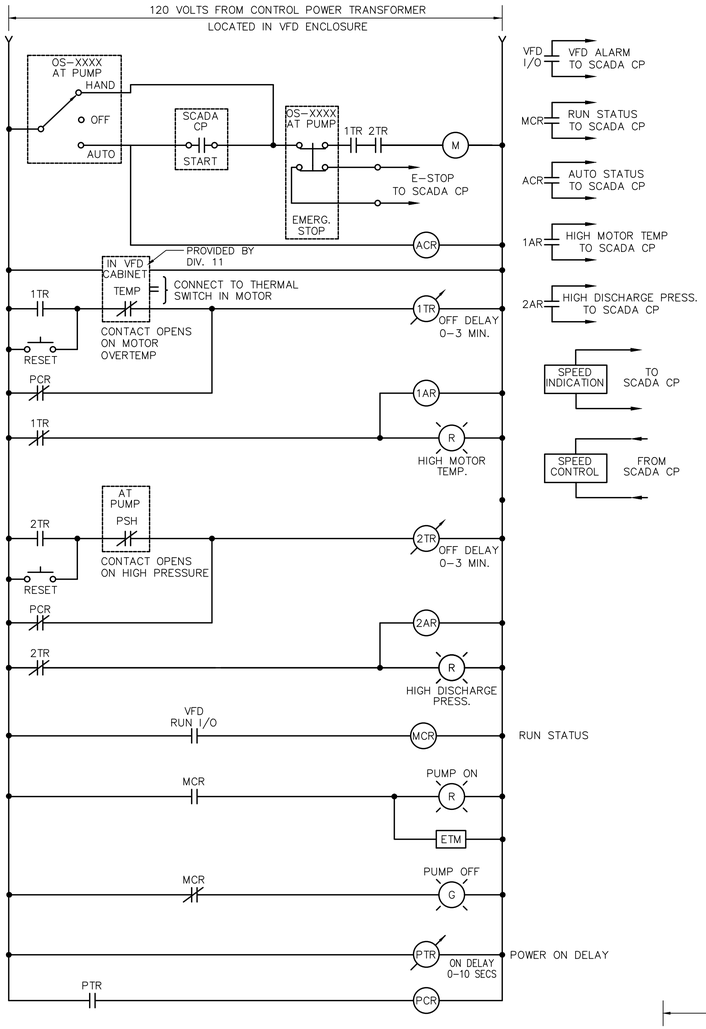

MOTOR CONTROL WIRING DIAGRAM
THICKENED SLUDGE PUMPS
NOT TO SCALE

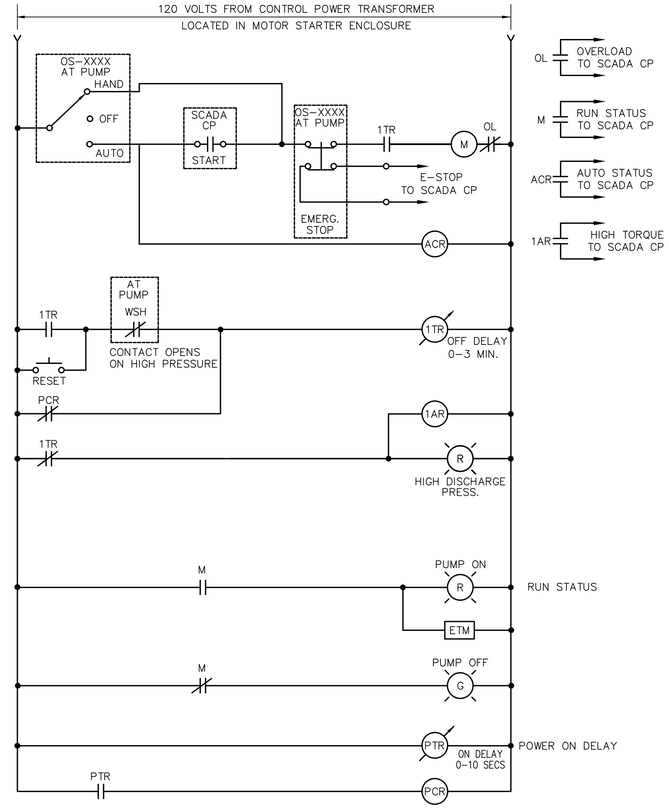

MOTOR CONTROL WIRING DIAGRAM
GRAVITY THICKENER DRIVES
NOT TO SCALE

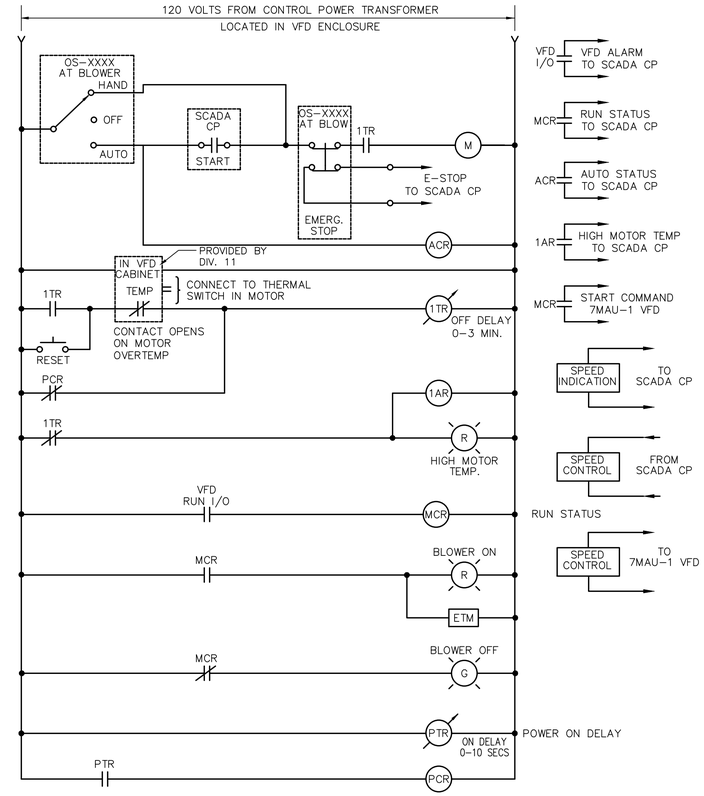

MOTOR CONTROL WIRING DIAGRAM
ODOR CONTROL BLOWERS
NOT TO SCALE

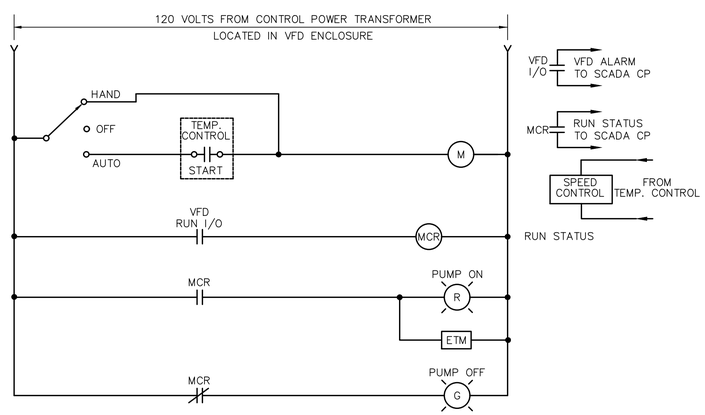

MOTOR CONTROL WIRING DIAGRAM
HOT WATER PUMPS
NOT TO SCALE

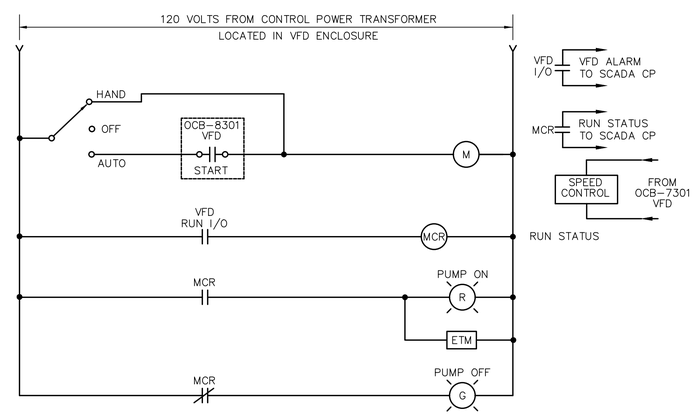

MOTOR CONTROL WIRING DIAGRAM
7MAU-1
NOT TO SCALE

PREPARED BY

BETA
www.BETA-Inc.com

REGISTERED PROFESSIONAL

NOT FOR CONSTRUCTION (CONCEPTUAL)

SUBCONSULTANT

PROJECT

Taunton Wastewater Treatment Facility Improvements

Taunton, MA

TITLE

ELECTRICAL MOTOR CONTROL WIRING DIAGRAMS

NO.	REVISIONS	DATE

DRAWN BY:	RB
DESIGNED BY:	MC
CHECKED BY:	MC
ISSUE DATE:	04/15/2020
BETA JOB NO.:	6050

SCALE

UNLESS OTHERWISE NOTED OR CHANGED BY REPRODUCTION

For Review Only

SHEET NO.

E-0.7

4/15/2020 2:07 PM W:\YEAR - 2018\18009.00 - TAUNTON WWTF UPGRADES\ELECTRICAL DEPARTMENT\PHASE IA\18009.00 ELEC DIAGRAMS AND DETAILS - 1A.DWG (BETA STB BW.STB)

GENERAL NOTES:

1. ALL MOUNTING BRACKETS, SUPPORTS, FASTENERS, AND ECT. WITHIN THE WET WELL SHALL BE STAINLESS STEEL.

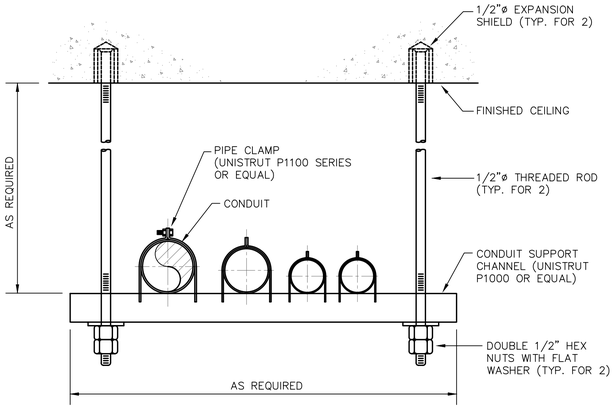

TYPICAL CONDUIT CEILING SUPPORT

NOT TO SCALE

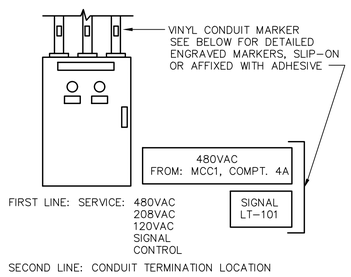

CONDUIT MARKER DETAIL

NOT TO SCALE

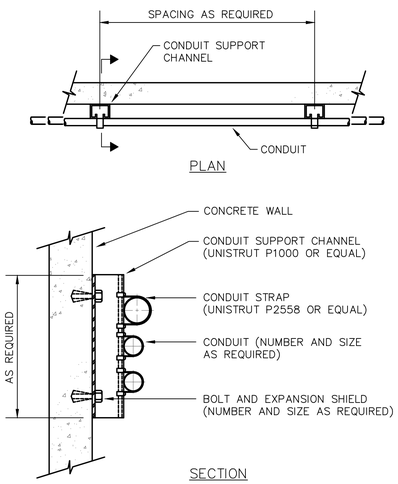

TYPICAL CONDUIT WALL SUPPORT

NOT TO SCALE

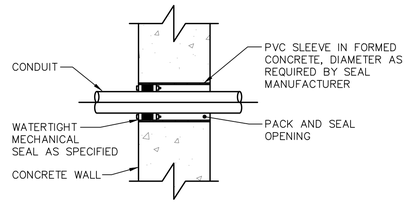

CONDUIT PENETRATION THROUGH CONCRETE WALL

NOT TO SCALE

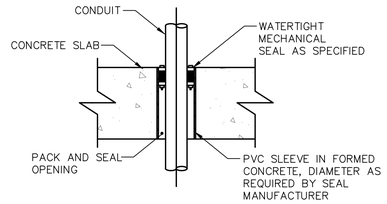

CONDUIT PENETRATION PASSING THROUGH CONCRETE SLAB

NOT TO SCALE

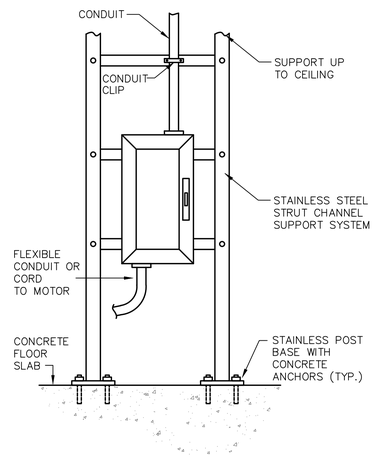

ELECTRICAL EQUIPMENT STANCHION MOUNTING DETAIL

NOT TO SCALE

PREPARED BY

BETA
www.BETA-Inc.com

REGISTERED PROFESSIONAL

NOT FOR CONSTRUCTION (CONCEPTUAL)

SUBCONSULTANT

PROJECT

Taunton Wastewater Treatment Facility Improvements

Taunton, MA

TITLE

ELECTRICAL DETAILS

NO.	REVISIONS	DATE

DRAWN BY:	RB
DESIGNED BY:	MC
CHECKED BY:	MC
ISSUE DATE:	04/15/2020
BETA JOB NO.:	6050

SCALE

UNLESS OTHERWISE NOTED OR CHANGED BY REPRODUCTION

For Review Only

SHEET NO.

E-0.8

4/15/2020 2:08 PM W:\YEAR - 2018\18009.00 - TAUNTON WWTF UPGRADES\ELECTRICAL DEPARTMENT\PHASE IA\18009.00 ELEC DIAGRAMS AND DETAILS - 1A.DWG (BETA STB BW.STB)

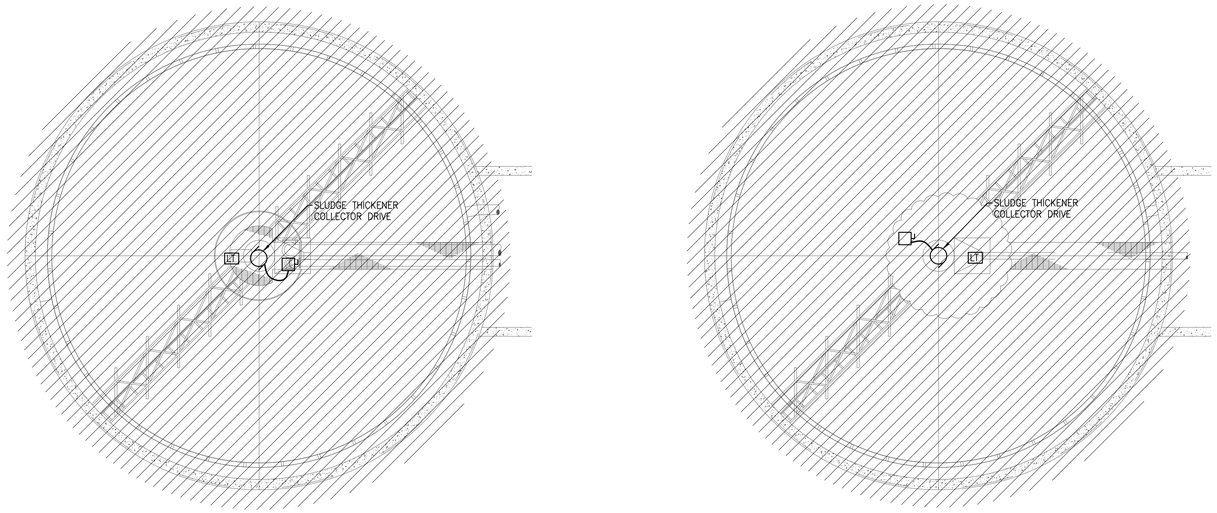

UPPER LEVEL PLAN

SCALE: 1/8"= 1'-0"

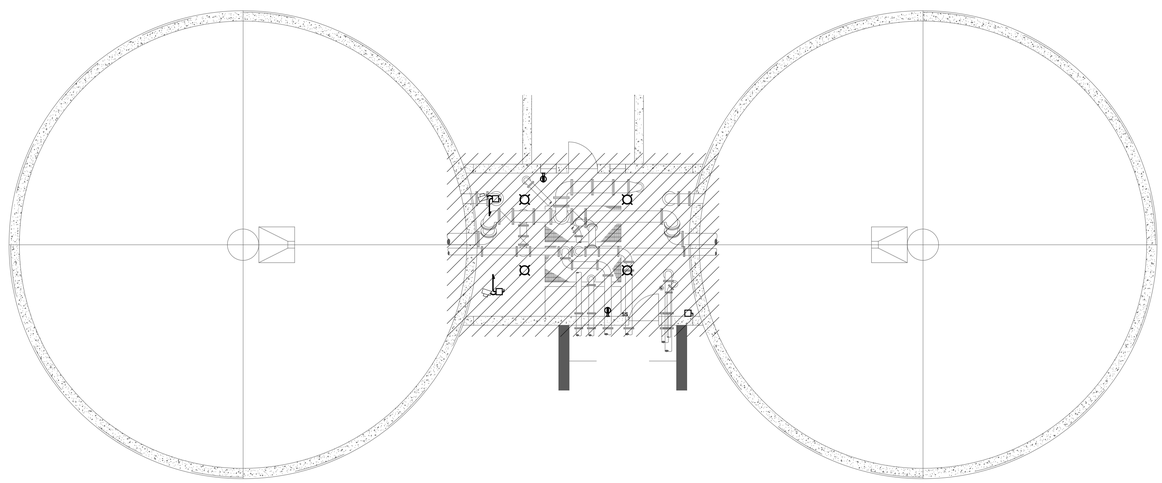

MID LEVEL PLAN

SCALE: 1/8"= 1'-0"

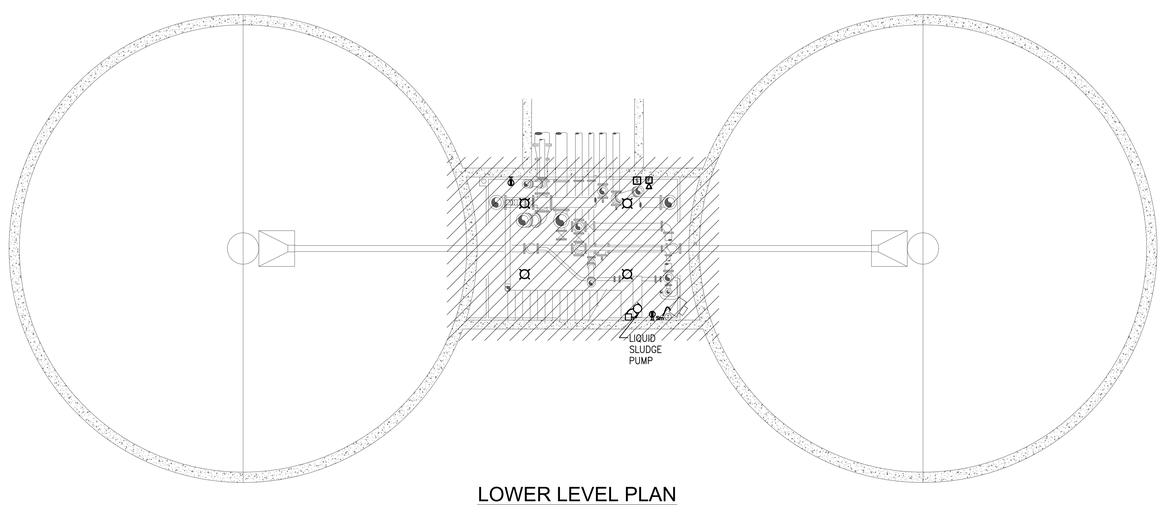

LOWER LEVEL PLAN

SCALE: 1/8"= 1'-0"

PREPARED BY

BETA
www.BETA-Inc.com

REGISTERED PROFESSIONAL

NOT FOR
CONSTRUCTION
(CONCEPTUAL)

SUBCONSULTANT

PROJECT

Taunton Wastewater Treatment Facility Improvements

Taunton, MA

TITLE

Electrical
Gravity Thickening
Tanks
Demolition Plans

NO.	REVISIONS	DATE

DRAWN BY:	RLB
DESIGNED BY:	MC
CHECKED BY:	MC
ISSUE DATE:	04/15/2020
BETA JOB NO.:	6050

SCALE

AS SHOWN

UNLESS OTHERWISE NOTED OR CHANGED BY REPRODUCTION

For Review Only

SHEET NO.

E-7.1

4/15/2020 2:09 PM W:\YEAR - 2018\18009.00 - TAUNTON WWTF UPGRADES\ELECTRICAL DEPARTMENT\18009.00 ELEC SOLIDS HANDLING BUILDING & TANKS.DWG (BETA STB BW.STB)

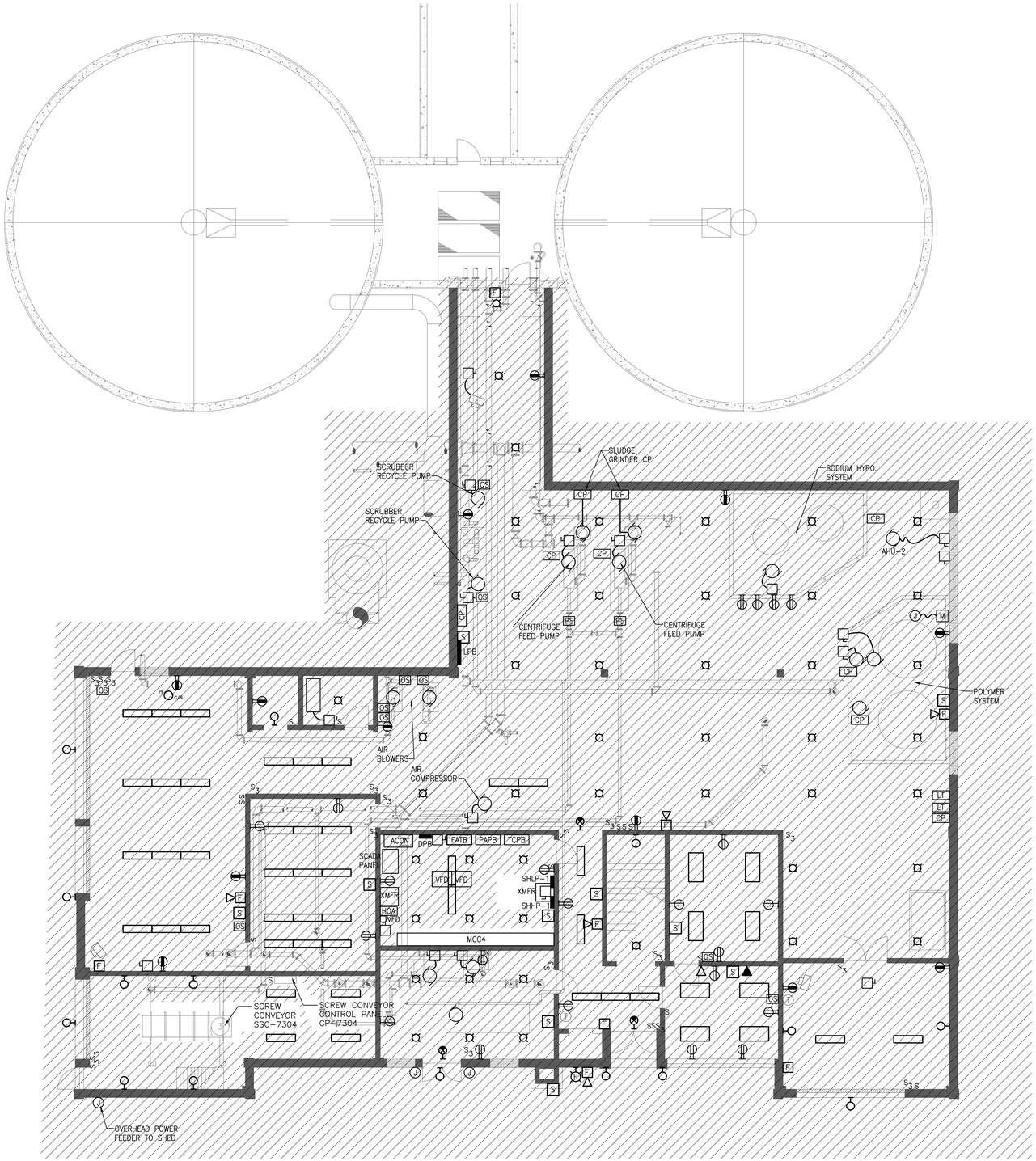

FIRST FLOOR - PLAN

SCALE: 1/8"= 1'-0"

PREPARED BY

BETA
www.BETA-Inc.com

REGISTERED PROFESSIONAL

NOT FOR CONSTRUCTION (CONCEPTUAL)

SUBCONSULTANT

PROJECT

Taunton Wastewater Treatment Facility Improvements

Taunton, MA

TITLE

Electrical
Solids Handling
Building
First Floor
Demolition Plan

NO.	REVISIONS	DATE

DRAWN BY:	RLB
DESIGNED BY:	MC
CHECKED BY:	MC
ISSUE DATE:	04/15/2020
BETA JOB NO.:	6050

SCALE

AS SHOWN

UNLESS OTHERWISE NOTED OR CHANGED BY REPRODUCTION

For Review Only

SHEET NO.

E-7.2

4/15/2020 2:10 PM W:\YEAR - 2018\18009.00 - TAUNTON WWTF UPGRADES\ELECTRICAL DEPARTMENT\18009.00 ELEC SOLIDS HANDLING BUILDING & TANKS.DWG (BETA STB BW.STB)

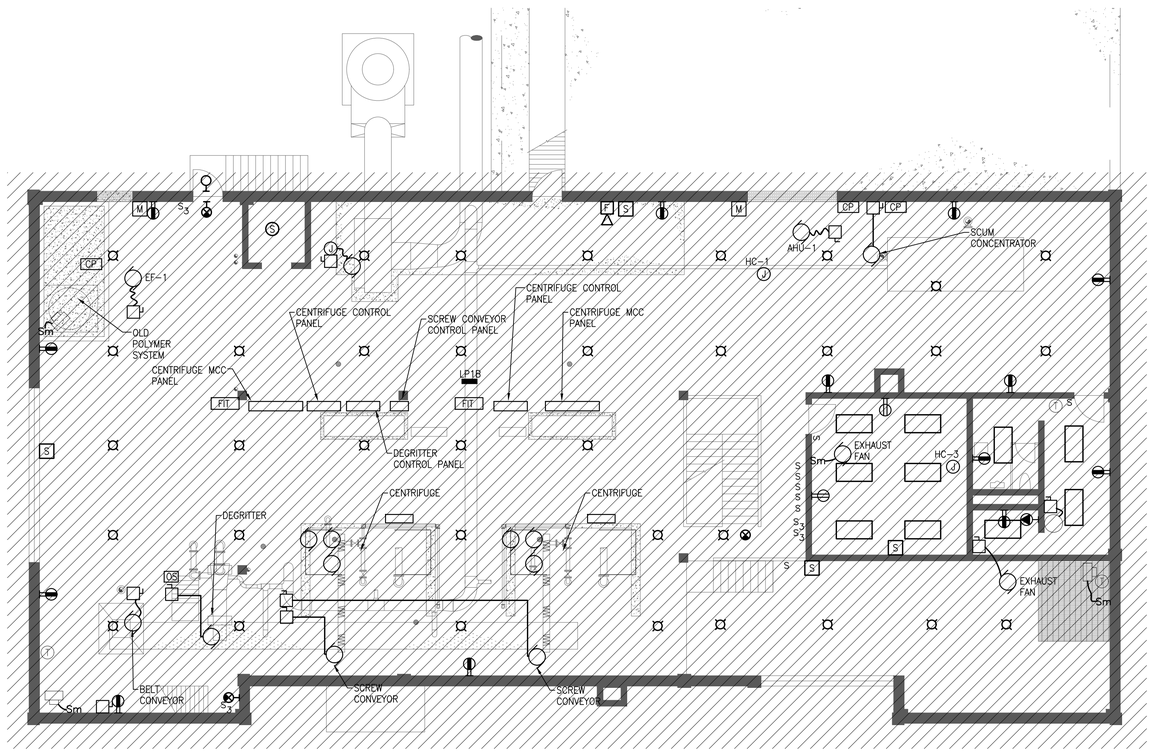

SECOND FLOOR - PLAN

SCALE: 1/8"= 1'-0"

PREPARED BY

BETA
www.BETA-Inc.com

REGISTERED PROFESSIONAL

NOT FOR CONSTRUCTION (CONCEPTUAL)

SUBCONSULTANT

PROJECT

Taunton Wastewater Treatment Facility Improvements

Taunton, MA

TITLE

Electrical
Solids Handling
Building
Second Floor
Demolition Plan

NO.	REVISIONS	DATE

DRAWN BY:	RLB
DESIGNED BY:	MC
CHECKED BY:	MC
ISSUE DATE:	04/15/2020
BETA JOB NO.:	6050

SCALE

AS SHOWN

UNLESS OTHERWISE NOTED OR CHANGED BY REPRODUCTION

For Review Only

SHEET NO.

E-7.3

4/15/2020 2:10 PM W:\YEAR - 2018\18009.00 - TAUNTON WWTF UPGRADES\ELECTRICAL DEPARTMENT\18009.00 ELEC SOLIDS HANDLING BUILDING & TANKS.DWG (BETA STB BW.STB)

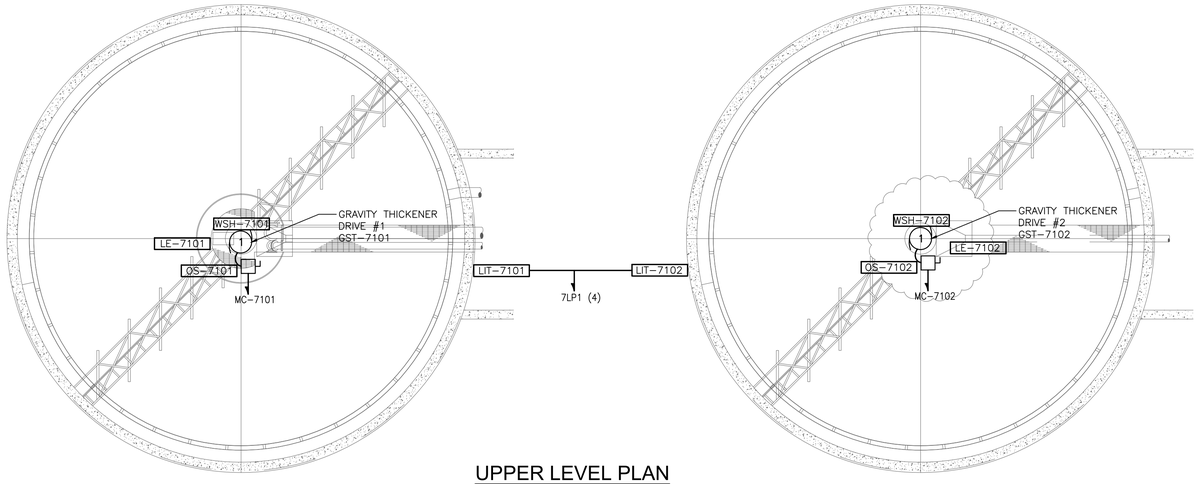

UPPER LEVEL PLAN

SCALE: 1/8"= 1'-0"

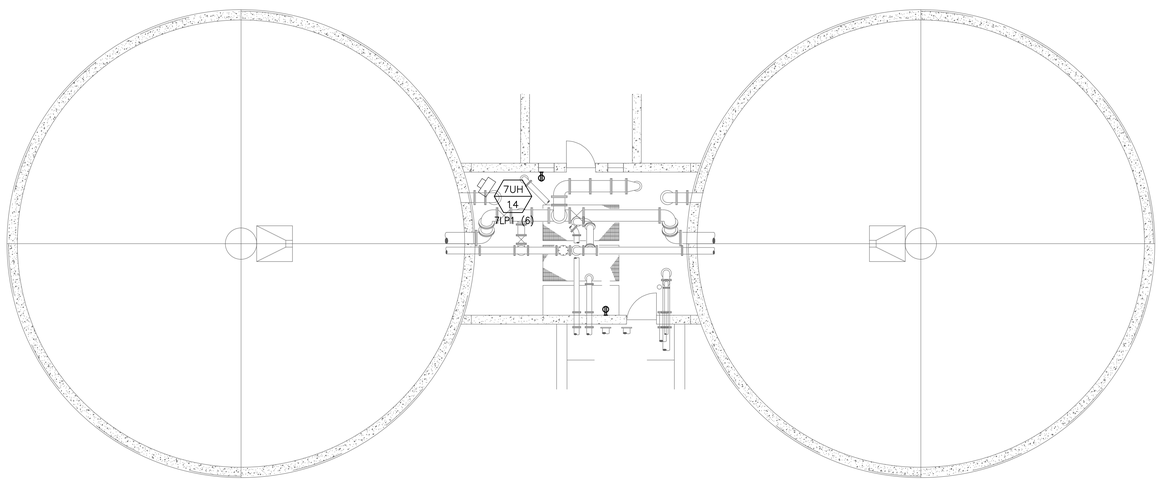

MID LEVEL PLAN

SCALE: 1/8"= 1'-0"

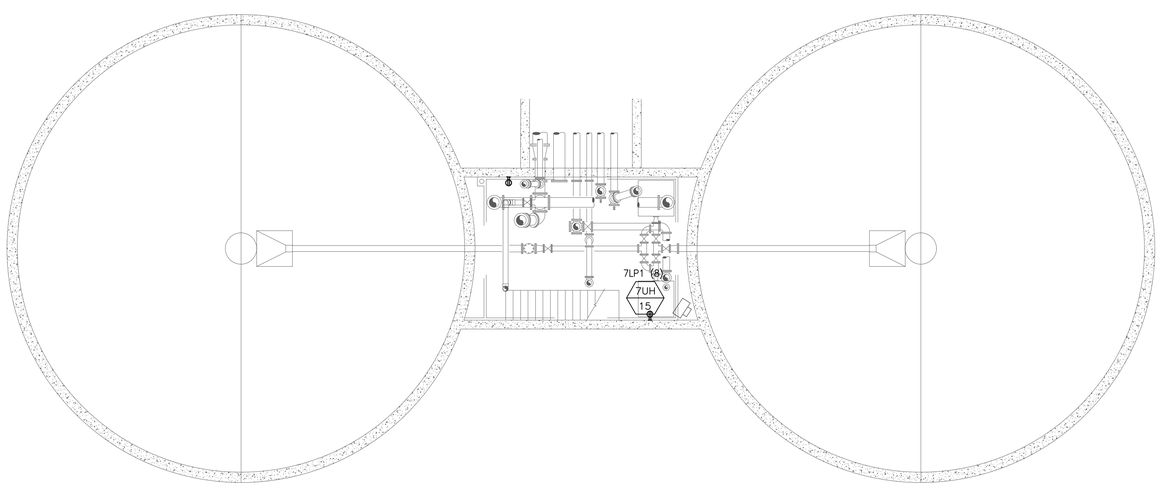

LOWER LEVEL PLAN

SCALE: 1/8"= 1'-0"

PREPARED BY

BETA
www.BETA-Inc.com

REGISTERED PROFESSIONAL

NOT FOR CONSTRUCTION (CONCEPTUAL)

SUBCONSULTANT

PROJECT

Taunton Wastewater Treatment Facility Improvements

Taunton, MA

TITLE

Electrical
Gravity Thickening Tanks
New Work Power Plans

NO.	REVISIONS	DATE

DRAWN BY:	RLB
DESIGNED BY:	MC
CHECKED BY:	MC
ISSUE DATE:	04/15/2020
BETA JOB NO.:	6050

SCALE

AS SHOWN

UNLESS OTHERWISE NOTED OR CHANGED BY REPRODUCTION

For Review Only

SHEET NO.

E-7.4

4/15/2020 2:11 PM W:\YEAR - 2018\18009.00 - TAUNTON WWTF UPGRADES\ELECTRICAL DEPARTMENT\18009.00 ELEC SOLIDS HANDLING BUILDING & TANKS.DWG (BETA STB BW.STB)

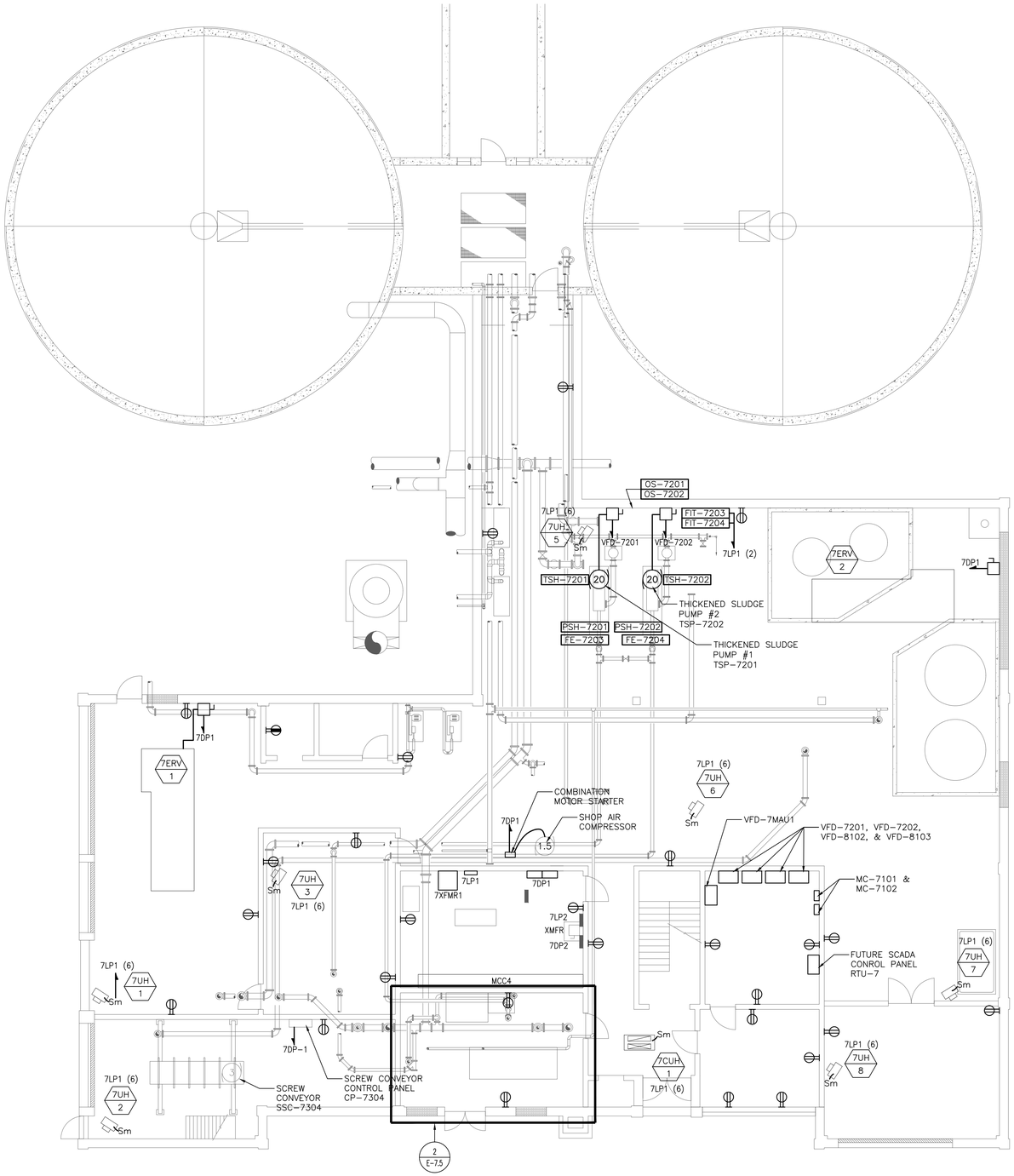

FIRST FLOOR - PLAN

SCALE: 1/8"= 1'-0"

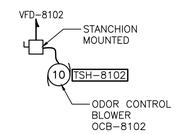

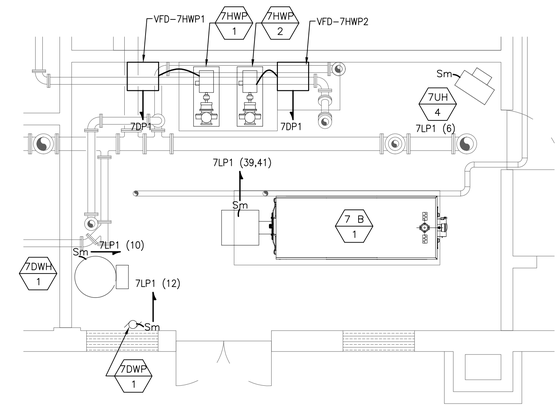

BOILER ROOM PART PLAN

SCALE: 1/4"= 1'-0"

PREPARED BY

BETA
www.BETA-Inc.com

REGISTERED PROFESSIONAL

NOT FOR CONSTRUCTION (CONCEPTUAL)

SUBCONSULTANT

PROJECT

Taunton Wastewater Treatment Facility Improvements

Taunton, MA

TITLE

Electrical Solids Handling Building First Floor New Work Power Plan

NO.	REVISIONS	DATE

DRAWN BY:	RLB
DESIGNED BY:	MC
CHECKED BY:	MC
ISSUE DATE:	04/15/2020
BETA JOB NO.:	6050

SCALE

AS SHOWN

UNLESS OTHERWISE NOTED OR CHANGED BY REPRODUCTION

For Review Only

SHEET NO.

E-7.5

4/15/2020 2:11 PM W:\YEAR - 2018\18009.00 - TAUNTON WWTF UPGRADES\ELECTRICAL DEPARTMENT\18009.00 ELEC SOLIDS HANDLING BUILDING & TANKS.DWG (BETA STB BW.STB)

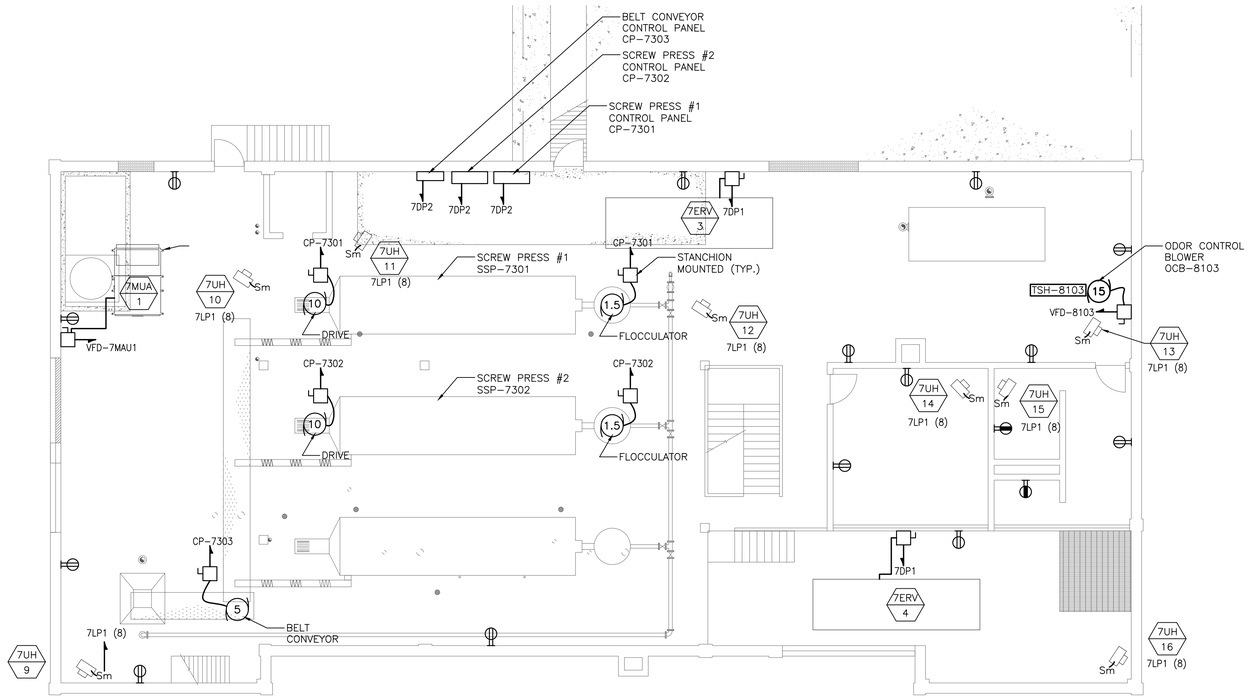

SECOND FLOOR - PLAN

SCALE: 1/8"= 1'-0"

PREPARED BY

BETA
www.BETA-Inc.com

REGISTERED PROFESSIONAL

NOT FOR CONSTRUCTION (CONCEPTUAL)

SUBCONSULTANT

PROJECT

Taunton Wastewater Treatment Facility Improvements

Taunton, MA

TITLE

Electrical
Solids Handling
Building
Second Floor
New Work
Power Plan

NO.	REVISIONS	DATE

DRAWN BY:	RLB
DESIGNED BY:	MC
CHECKED BY:	MC
ISSUE DATE:	04/15/2020
BETA JOB NO.:	6050

SCALE

AS SHOWN

UNLESS OTHERWISE NOTED OR CHANGED BY REPRODUCTION

For Review Only

SHEET NO.

E-7.6

4/15/2020 2:11 PM W:\YEAR - 2018\18009.00 - TAUNTON WWTF UPGRADES\ELECTRICAL DEPARTMENT\18009.00 ELEC SOLIDS HANDLING BUILDING & TANKS.DWG (BETA STB BW.STB)

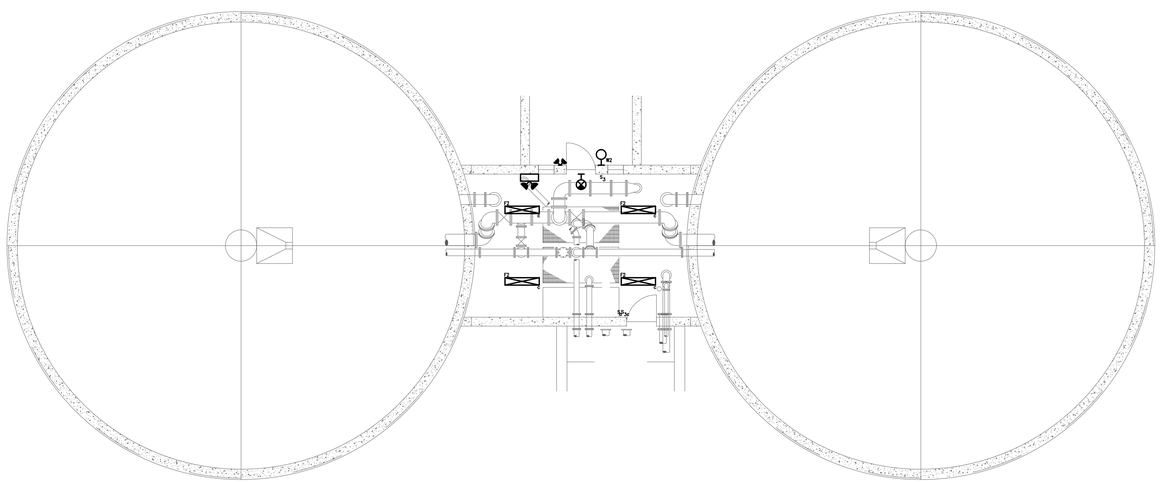

MID LEVEL PLAN

SCALE: 1/8"= 1'-0"

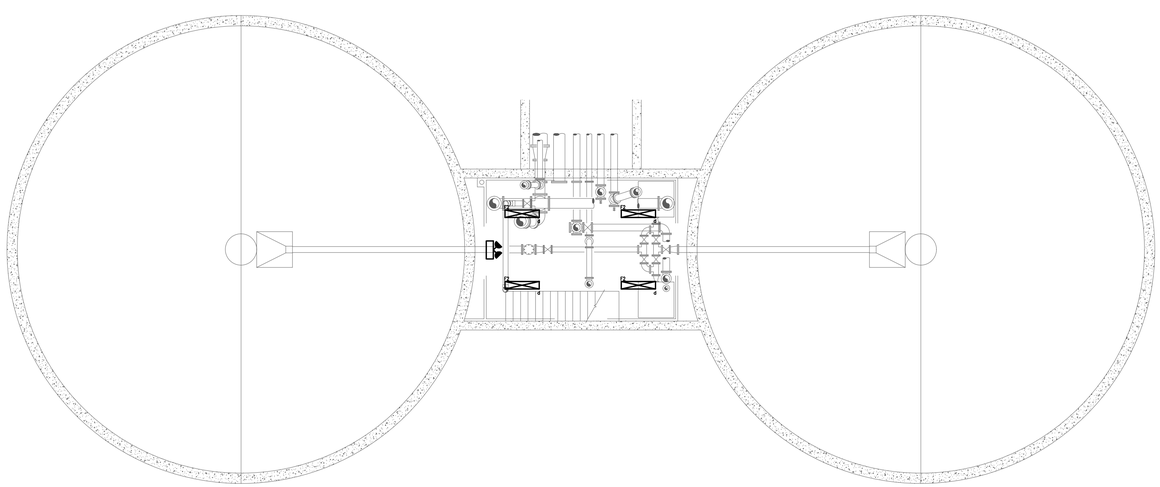

LOWER LEVEL PLAN

SCALE: 1/8"= 1'-0"

PREPARED BY

BETA

www.BETA-Inc.com

REGISTERED PROFESSIONAL

NOT FOR CONSTRUCTION (CONCEPTUAL)

SUBCONSULTANT

PROJECT

Taunton Wastewater Treatment Facility Improvements

Taunton, MA

TITLE

Electrical
Gravity Thickening Tanks
New Work Lighting Plans

NO.	REVISIONS	DATE

DRAWN BY:	RLB
DESIGNED BY:	MC
CHECKED BY:	MC
ISSUE DATE:	04/15/2020
BETA JOB NO.:	6050

SCALE

AS SHOWN

UNLESS OTHERWISE NOTED OR CHANGED BY REPRODUCTION

For Review Only

SHEET NO.

E-7.10

4/15/2020 2:12 PM W:\YEAR - 2018\18009.00 - TAUNTON WWTF UPGRADES\ELECTRICAL DEPARTMENT\18009.00 ELEC SOLIDS HANDLING BUILDING & TANKS.DWG (BETA STB BW.STB)

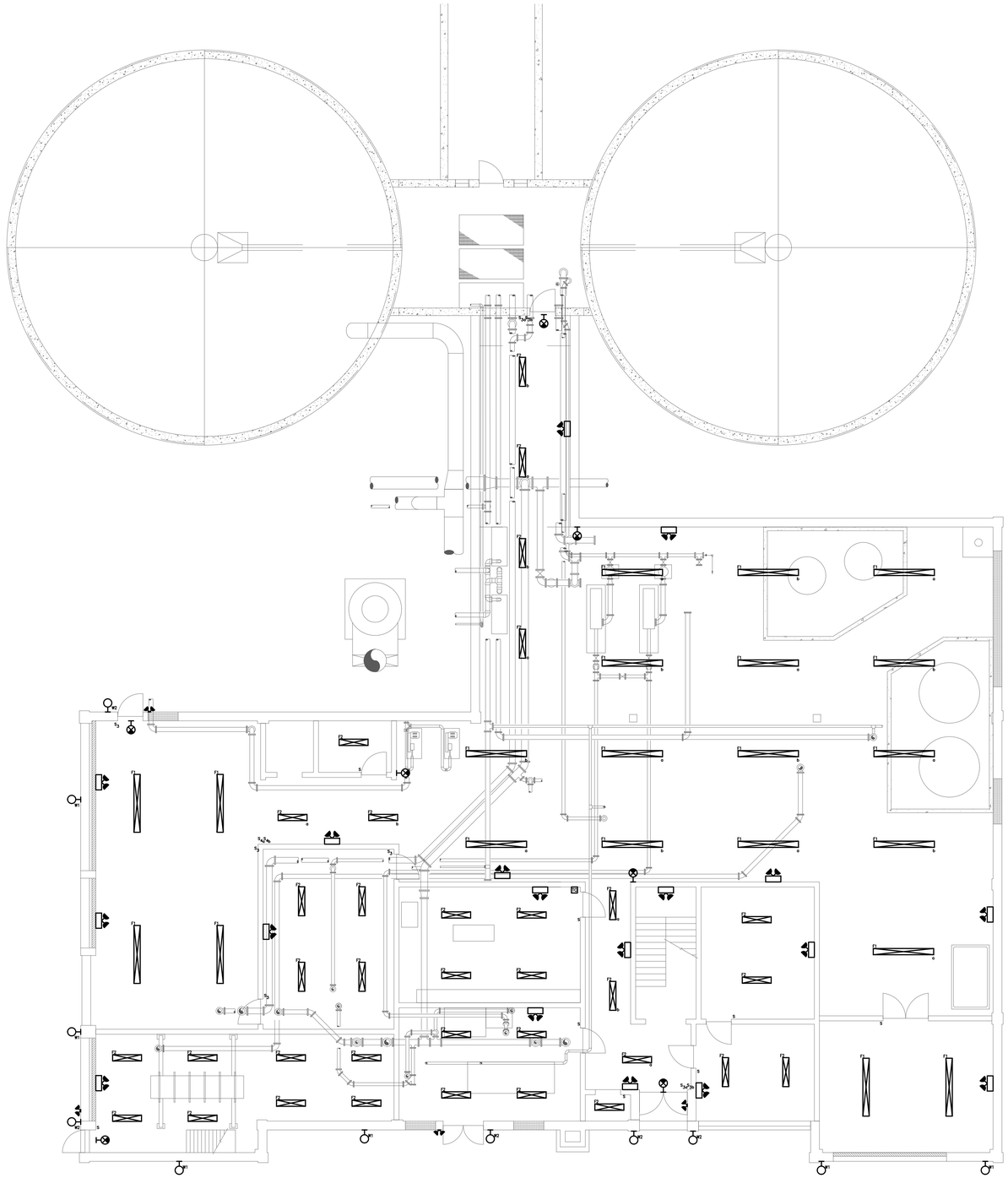

FIRST FLOOR - PLAN

SCALE: 1/8"= 1'-0"

PREPARED BY

BETA
www.BETA-Inc.com

REGISTERED PROFESSIONAL

NOT FOR CONSTRUCTION (CONCEPTUAL)

SUBCONSULTANT

PROJECT

Taunton Wastewater Treatment Facility Improvements

Taunton, MA

TITLE

Electrical
Solids Handling
Building
First Floor New
Work Lighting
Plan

NO.	REVISIONS	DATE

DRAWN BY:	RLB
DESIGNED BY:	MC
CHECKED BY:	MC
ISSUE DATE:	04/15/2020
BETA JOB NO.:	6050

SCALE

AS SHOWN

UNLESS OTHERWISE NOTED OR CHANGED BY REPRODUCTION

For Review Only

SHEET NO.

E-7.8

4/15/2020 2:12 PM W:\YEAR - 2018\18009.00 - TAUNTON WWTF UPGRADES\ELECTRICAL DEPARTMENT\18009.00 ELEC SOLIDS HANDLING BUILDING & TANKS.DWG (BETA STB BW.STB)

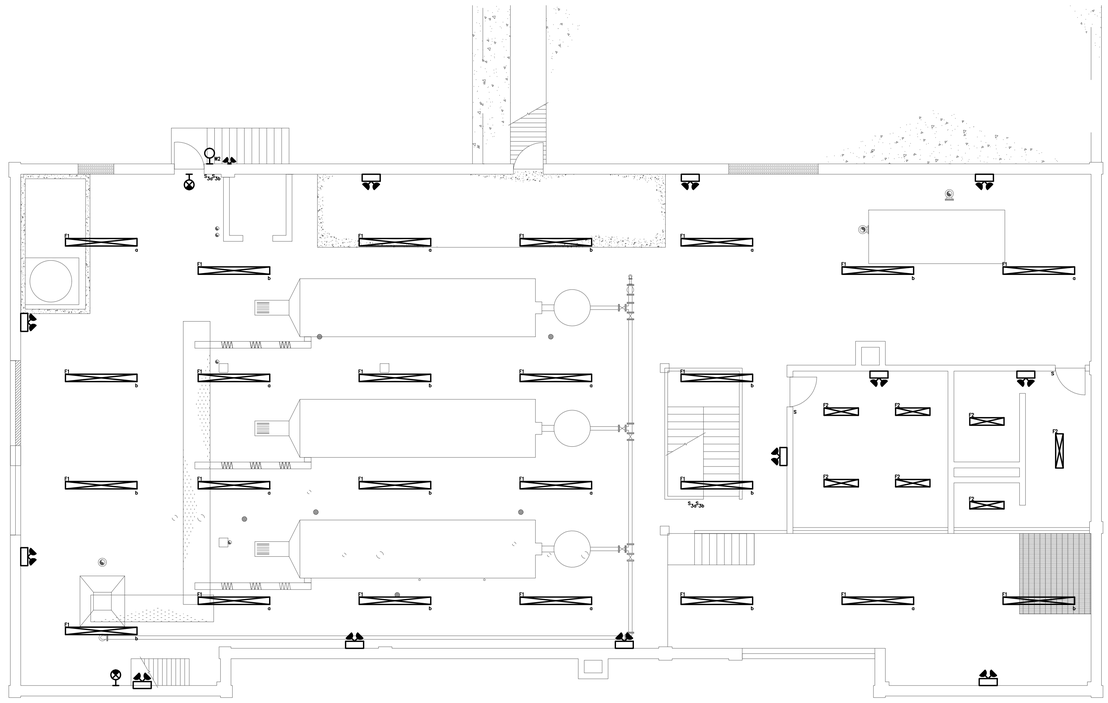

SECOND FLOOR - PLAN

SCALE: 1/8"= 1'-0"

PREPARED BY

BETA
www.BETA-Inc.com

REGISTERED PROFESSIONAL

NOT FOR CONSTRUCTION (CONCEPTUAL)

SUBCONSULTANT

PROJECT

Taunton Wastewater Treatment Facility Improvements

Taunton, MA

TITLE

Electrical
Solids Handling
Building
Second Floor
New Work
Lighting Plan

NO.	REVISIONS	DATE

DRAWN BY:	RLB
DESIGNED BY:	MC
CHECKED BY:	MC
ISSUE DATE:	04/15/2020
BETA JOB NO.:	6050

SCALE

AS SHOWN

UNLESS OTHERWISE NOTED OR CHANGED BY REPRODUCTION

For Review Only

SHEET NO.

E-7.9

4/15/2020 2:12 PM W:\YEAR - 2018\18009.00 - TAUNTON WWTF UPGRADES\ELECTRICAL DEPARTMENT\18009.00 ELEC SOLIDS HANDLING BUILDING & TANKS.DWG (BETA STB BW.STB)

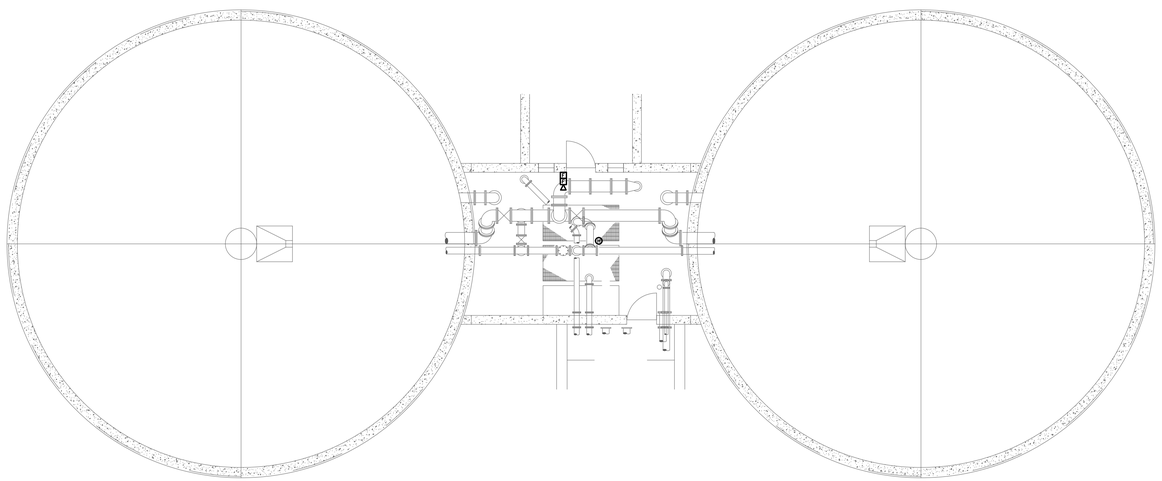

MID LEVEL PLAN

SCALE: 1/8"= 1'-0"

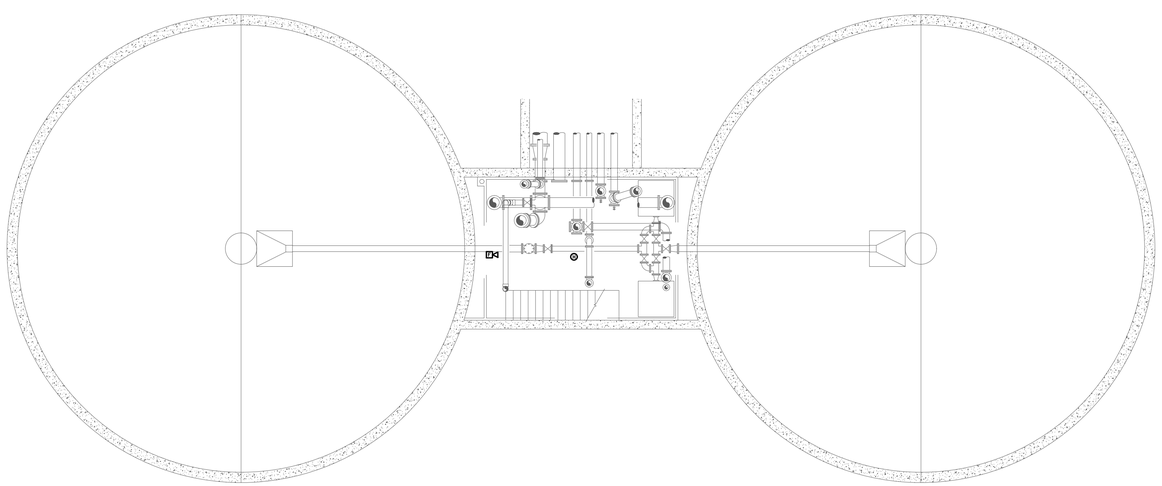

LOWER LEVEL PLAN

SCALE: 1/8"= 1'-0"

PREPARED BY

BETA

www.BETA-Inc.com

REGISTERED PROFESSIONAL

NOT FOR CONSTRUCTION (CONCEPTUAL)

SUBCONSULTANT

PROJECT

Taunton Wastewater Treatment Facility Improvements

Taunton, MA

TITLE

Electrical
Gravity Thickening Tanks
New Work Fire Alarm Plans

NO.	REVISIONS	DATE

DRAWN BY:	RLB
DESIGNED BY:	MC
CHECKED BY:	MC
ISSUE DATE:	04/15/2020
BETA JOB NO.:	6050

SCALE

AS SHOWN

UNLESS OTHERWISE NOTED OR CHANGED BY REPRODUCTION

For Review Only

SHEET NO.

E-7.10

4/15/2020 2:18 PM W:\YEAR - 2018\18009.00 - TAUNTON WWTF UPGRADES\ELECTRICAL DEPARTMENT\18009.00 ELEC SOLIDS HANDLING BUILDING & TANKS.DWG (BETA STB BW.STB)

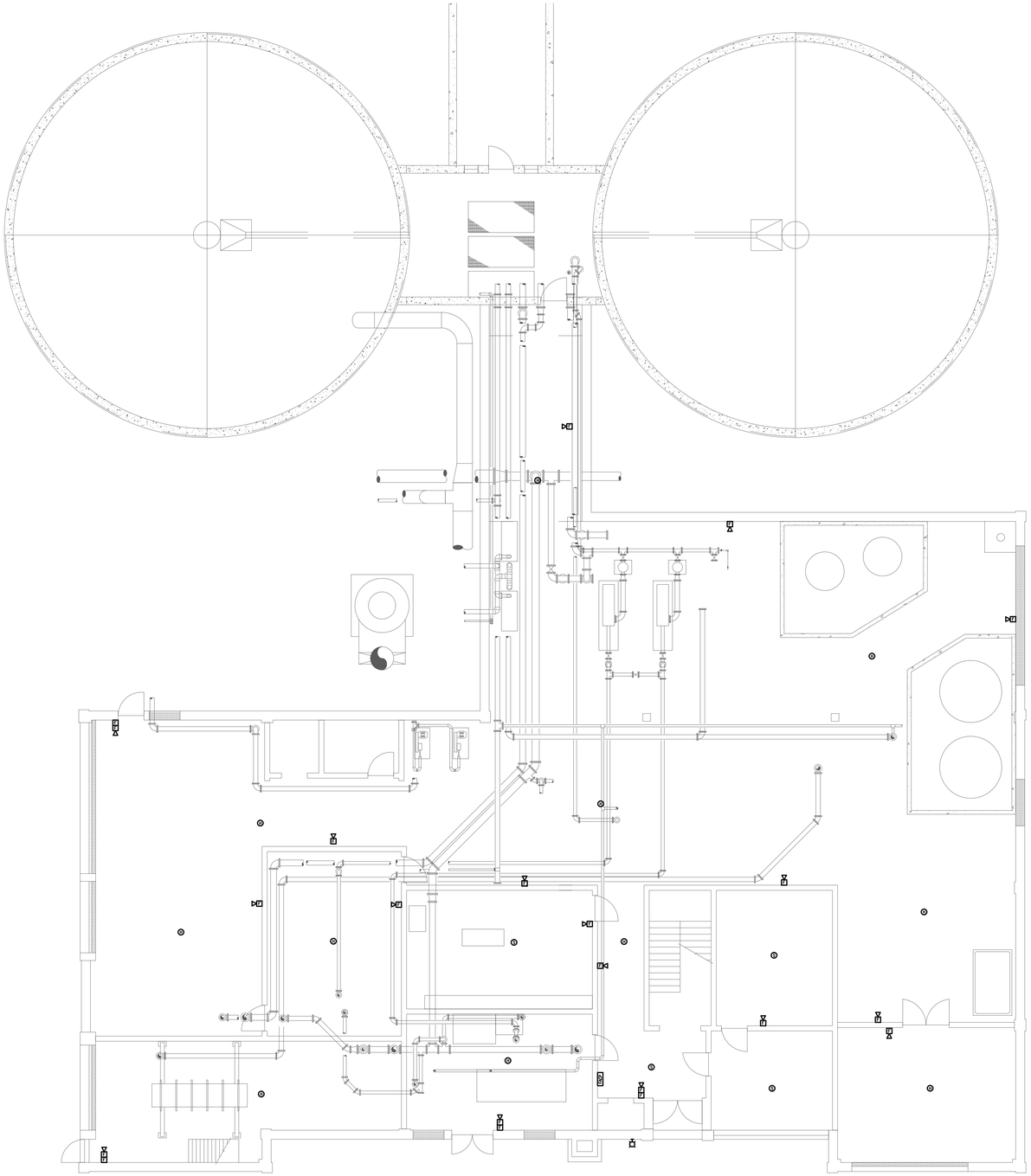

FIRST FLOOR - PLAN

SCALE: 1/8"= 1'-0"

PREPARED BY

BETA
www.BETA-Inc.com

REGISTERED PROFESSIONAL

NOT FOR CONSTRUCTION (CONCEPTUAL)

SUBCONSULTANT

PROJECT

Taunton Wastewater Treatment Facility Improvements

Taunton, MA

TITLE

Electrical Solids Handling Building First Floor New Work Fire Alarm Plan

NO.	REVISIONS	DATE

DRAWN BY:	RLB
DESIGNED BY:	MC
CHECKED BY:	MC
ISSUE DATE:	04/15/2020
BETA JOB NO.:	6050

SCALE

AS SHOWN

UNLESS OTHERWISE NOTED OR CHANGED BY REPRODUCTION

For Review Only

SHEET NO.

E-7.11

4/15/2020 2:13 PM W:\YEAR - 2018\18009.00 - TAUNTON WWTF UPGRADES\ELECTRICAL DEPARTMENT\18009.00 ELEC SOLIDS HANDLING BUILDING & TANKS.DWG (BETA STB BW.STB)

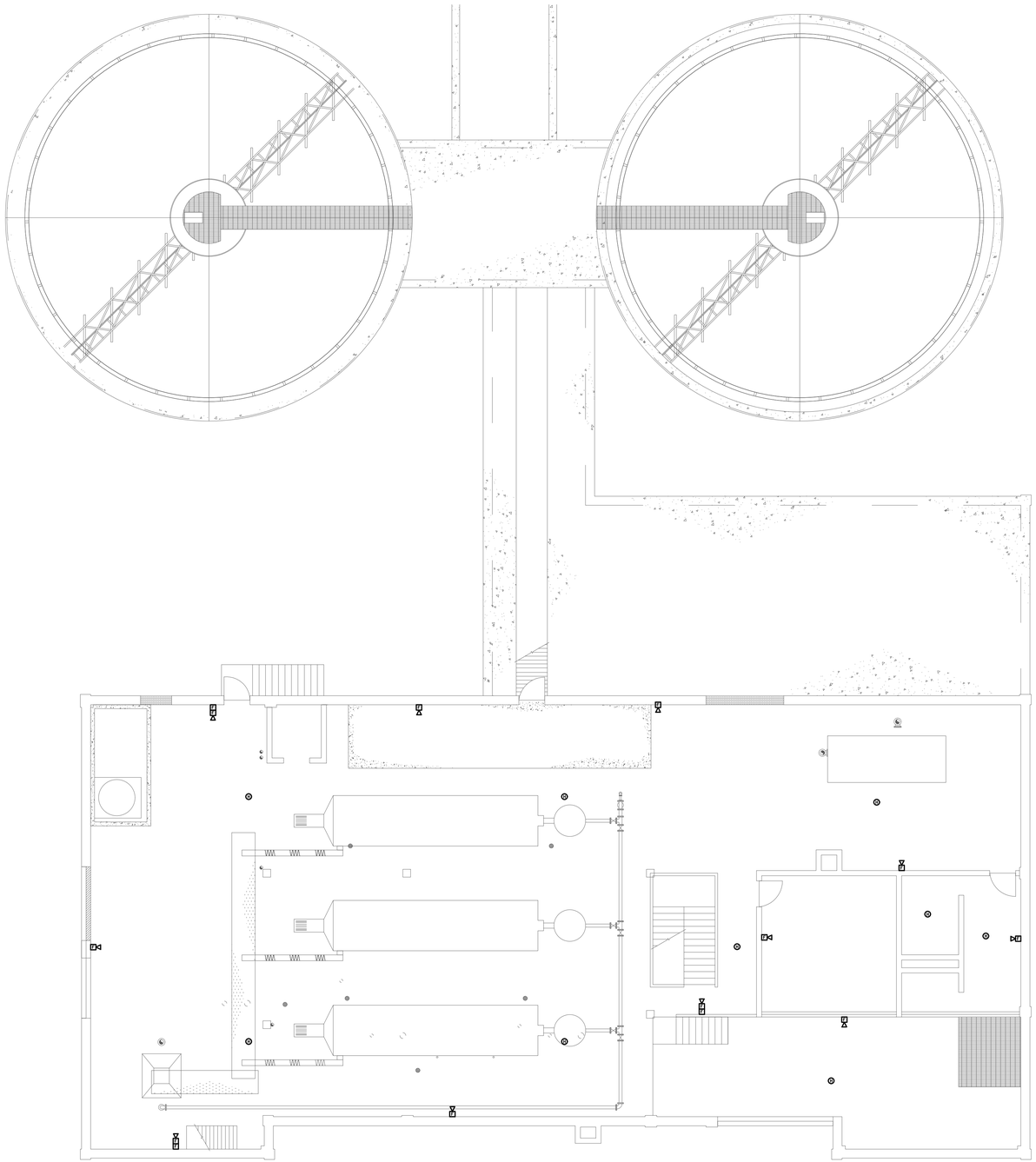

SECOND FLOOR - PLAN

SCALE: 1/8"= 1'-0"

PREPARED BY

BETA
www.BETA-Inc.com

REGISTERED PROFESSIONAL

NOT FOR CONSTRUCTION (CONCEPTUAL)

SUBCONSULTANT

PROJECT

Taunton Wastewater Treatment Facility Improvements

Taunton, MA

TITLE

Electrical Solids Handling Building Second Floor New Work Fire Alarm Plan

NO.	REVISIONS	DATE

DRAWN BY:	RLB
DESIGNED BY:	MC
CHECKED BY:	MC
ISSUE DATE:	04/15/2020
BETA JOB NO.:	6050

SCALE

AS SHOWN

UNLESS OTHERWISE NOTED OR CHANGED BY REPRODUCTION

For Review Only

SHEET NO.

E-7.12

4/15/2020 2:13 PM W:\YEAR - 2018\18009.00 - TAUNTON WWTF UPGRADES\ELECTRICAL DEPARTMENT\18009.00 ELEC SOLIDS HANDLING BUILDING & TANKS.DWG (BETA STB BW.STB)