ELECTRICAL SYMBOLS

F1 1 o	LINEAR LIGHTING FIXTURES "F1" INDICATES FIXTURE TYPE – TYPICAL FOR ALL FIXTURES "1" INDICATES CIRCUIT NUMBER – TYPICAL FOR ALL FIXTURE "o" INDICATES THE SWITCH CONTROL – TYPICAL FOR ALL FIXTURES
	WALL MOUNTED LIGHTING FIXTURE.
	SURFACE OR PENDANT MOUNTED FIXTURE.
	POLE MOUNTED SITE LIGHT FIXTURE
	EMERGENCY EXIT SIGN
	EMERGENCY LIGHTING BATTERY UNIT WITH TWO LIGHT HEADS
	REMOTE EMERGENCY LIGHTING UNIT WITH TWO LIGHTING HEADS PROVIDE 3/4", 2#10, 1#10GND TO NEAREST THE EMEGENCY LIGHTING BATTERY UNIT
S_o^{WP}	SINGLE POLE SWITCH 120V, 20A "o" INDICATES THE SWITCH CONTROL, "WP" INDICATES WITH WEATHERPROOF COVER
S_2	2–POLE SWITCH 120V, 20A 1 POLE FOR ROOM LIGHT FIXTURES, 1–POLE FOR EXHAUST FAN CONTROL
S_{3o}	3–WAY SWITCH 120V, 20A "o" INDICATES THE SWITCH CONTROL
S_{4o}	4–WAY SWITCH 120V, 20A "o" INDICATES THE SWITCH CONTROL
TC	DIGITAL TIME CLOCK SWITCH
TM	MECHANICAL TIMER SWITCH
OC	WALL MOUNTED DUAL TECHNOLOGY OCCUPANCY SENSOR/SWITCH
S	LOW VOLTAGE SWITCH
	CEILING MOUNTED DUAL TECHNOLOGY OCCUPANCY SENSOR
LCP	LIGHTING CONTROL PANEL
Φ_1	DUPLEX RECEPTACLE, WEATHER–RESISTANT 120V, 20A WITH WEATHERPROOF COVER "1" INDICATES CIRCUIT NUMBER – TYPICAL FOR ALL RECEPTACLES
Φ^{GF}	DUPLEX RECEPTACLE, 120V, 20A "GF" INDICATES GROUND FAULT TYPE RECEPTACLE
Φ^{WP}	(2) DUPLEX (QUAD) RECEPTACLES, 120V, 20A "WP" INDICATES WITH WEATHERPROOF COVER
Φ^{WP}	SIMPLEX RECEPTACLE, WP INDICATES WEATHER RESISTANT 120V, 20A UNFUSED DISCONNECT SWITCH, "30" INDICATES 30 AMP RATING, PROVIDE 3–POLE "WP" INDICATES WITH WEATHERPROOF COVER
$\square_{30}$	UNLESS OTHERWISE INDICATED.
F_{20}	FUSED DISCONNECT SWITCH, "20" INDICATES 20 AMP FUSE RATING, PROVIDE 3–POLE UNLESS OTHERWISE INDICATED.
	3–PHASE RECEPTACLE
MCP FVNR	WALL MOUNTED COMBINATION MOTOR STARTER WITH MOTOR CIRCUIT PROTECTOR, "FVNR" INDICATES TYPE OF MOTOR STARTER
MCP FVNR	MOTOR STARTER WITH MOTOR CIRCUIT PROTECTOR, "FVNR" INDICATES TYPE OF MOTOR STARTER
VFD	ENCLOSED VARIABLE FREQUENCY DRIVE
Sm	MANUAL MOTOR STARTER 120V, 20A
J J	JUNCTION BOX
HH	POLYMER CONCRETE HAND HOLE
AR1	ALARM RELAY, "AR1" REFERS TO RELAY NAME DESIGNATION
CR1	CONTROL RELAY, "CR1" REFERS TO RELAY NAME DESIGNATION
M	MOTOR START RELAY
TR1	TIMING RELAY, "TR1" REFERS TO RELAY NAME DESIGNATION
	NORMALY OPEN RELAY CONTACT
	NORMALLY CLOSED RELAY CONTACT
	OPERATOR PUSH BUTTON NORMALLY OPEN CONTACT
	OPERATOR PUSH BUTTON NORMALLY CLOSED CONTACT
	PRESSURE SWITCH – CLOSES ON HIGH PRESSURE
	PRESSURE SWITCH – CLOSES ON LOW PRESSURE

ELECTRICAL SYMBOLS

	UNDERGROUND CONDUIT DUCT BANK
PP1(1)	HOMERUN DESIGNATION TO PANEL PP1 CIRCUIT #1, WITH THE FOLOWING CONDUIT/WIRES UNLESS OTHERWISE NOTED: • 3/4"C WITH 2#12, 1#12GND FOR 20AMP SINGLE PHASE CIRCUITS. • 3/4"C WITH 3#12, 1#12GND FOR 20AMP THREE PHASE CIRCUITS. • 3/4"C WITH 2#10, 1#10GND FOR 30AMP SINGLE PHASE CIRCUITS. • 3/4"C WITH 3#10, 1#10GND FOR 30AMP THREE PHASE CIRCUITS. • 3/4"C WITH 2#8, 1#10GND FOR 40AMP & 50AMP SINGLE PHASE CIRCUITS. • 3/4"C WITH 3#8, 1#10GND FOR 40AMP & 50AMP THREE PHASE CIRCUITS.
	EYS TYPE CONDUIT SEAL
SPD	SURGE PROTECTION DEVICE
GFM	GROUND FAULT MONITOR AND INDICATION LIGHT
	UTILITY POLE
20 100 LSIG	MOLDED CASE CIRCUIT BREAKER, 3–POLE UNLESS OTHERWISE INDICATED, "20" INDICATES TRIP AMPERE RATING, "100" INDCATES FRAME SIZE, "LSIG" LONG, SHORT, INSTANTANEOUS AND GROUND FAULT PROTECTION RESPECTIVELY
	DRY TYPE TRANSFORMER
	CONCRETE HAND HOLE (REFER TO SITE DETAILS)
	3/4"ø X 10'–0" COPPER CLAD GROUND ROD
	BUILDING GROUNDING SYSTEM
10	MOTOR, "10" INDICATES HORSEPOWER RATING
XX	CABLE/CONDUIT DESIGNATION, "XX" REFERS CABLE CONDUIT REFERENCE, REFER TO CABLE/CONDUIT SCHEDULES.
OS–XXXX YYY	OPERATOR STATION (SUPPLIED BY OTHER DIV. 16 UNO), "XXXX" REFERS TO TAGNAME ID, "YYY" REFERS TO THE TYPE OF OPERATOR STATION
XX–XXXX	UNLESS OTHERWISE NOTED INSTRUMENATION OR PROCESS EQUIPMENT (SUPPLIED BY OTHER DIVISIONS) "XX–XXXX" REFERS TO TAGNAME ID
E	GENERATOR EMERGENCY STOP, PROVIDE WITH 3 SEPARATE NORMALLY CLOSED CONTACTS
O	OCCUPIED/UNOCCUPIED SELECTOR SWITCH. (SUPPLIED BY DIV. 16)
T	THERMOSTAT (SUPPLIED BY DIV. 15)
M	MOTOR OPERATED DAMPER (SUPPLIED BY DIV. 15)
F XKW	ELECTRIC UNIT HEATER, "X" INDICATES UNIT ELECTRIC COIL RATING (SUPPLIED BY DIV. 15)
CUH 1 P11–LP (21)	EQUIPMENT CIRCUIT NUMBER DESIGNATION TO PANEL PP1–LP CIRCUIT #21.

TELE/DATA LEGEND

1T 2D	WALL MOUNTED DATA OUTLET, 2D INDICATES (2) CAT6 TERMINAL DATA CONNECTORS, 1T INDICATES (1) CAT6 TERMINAL TELEPHONE CONNECTOR
WAP	CEILING MOUNTED WIRELESS ACCESS POINT WITH (1) CAT6 CABLE

DEMOLITION NOTES

1. UNLESS OTHERWISE NOTED, ALL EXISTING ELECTRICAL SYSTEMS WITHIN HATCH MARKS (POWER, LIGHTING, LOW VOLTAGE, CONTROLS, ETC) AND ASSOCIATED EQUIPMENT IS TO BE DEMOLISHED OR SALVAGED. DISCONNECT AND DE–ENERGIZE THE EQUIPMENT. REMOVE THE EQUIPMENT TO BE DEMOLISHED OR SALVAGED PER SECTION 02050. ALL CONTROL DEVICES, CONDUIT, CABLING, BOXES, SUPPORTS, ETC, ASSOCIATED WITH THE DEMOLISHED EQUIPMENT SHALL BE REMOVED. THE CONDUIT AND CABLING SHALL BE REMOVED BACK TO SOURCE.
2. NO DEVICE OR EQUIPMENT INDICATED FOR DEMOLITION WILL BE REUSED OR SALVAGED UNLESS SPECIFICALLY NOTED AS SUCH. ALL EQUIPMENT REMOVED SHALL BE REMOVED FROM SITE AND PROPERLY DISPOSED OF, PRIOR TO REMOVAL OF EQUIPMENT COORDINATE WITH OWNER FOR ANY EQUIPMENT THE OWNER WILL KEEP.
3. EXISTING EQUIPMENT INDICATED ON THE DEMOLITION PLANS ARE BASED ON SITE OBSERVATIONS AND IT IS NOT THE INTENTION OF THESE DRAWINGS TO SHOW ALL EQUIPMENT AND MATERIALS TO BE DISCONNECTED AND/OR REMOVED.
4. DEMOLITION ONE LINE DIAGRAMS ONLY INDICATE CURRENT ACTIVE EQUIPMENT AND DO NOT INDICATE ABANDONED EQUIPMENT NO LONGER IN SERVICE. DEMOLITION PLAN DRAWINGS INDICATE BOTH ACTIVE AND ABANDONED EQUIPMENT THAT IS REQUIRED TO BE DEMOLISHED.
5. RING OUT CIRCUITS PRIOR TO DEMOLITION TO DETERMINE ACTIVE CIRCUITS AND DEMOLISH ACTIVE CIRCUITS IN ACCORDANCE TO PHASING PLAN.

ELECTRICAL SYMBOLS

GDC	GAS DETECTION SYSTEM – CONTROL PANEL (SUPPLIED BY DIV. 17)
GD	GAS DETECTION SYSTEM – GAS SENSOR DETECTOR (SUPPLIED BY DIV. 17)
A	GAS DETECTION SYSTEM – AMBER ALARM BEACON (SUPPLIED BY DIV. 17)
H	GAS DETECTION SYSTEM – ALARM HORN (SUPPLIED BY DIV.17)

FIRE ALARM SYSTEM SYMBOLS

F	MANUAL FIRE ALARM STATION
F	FIRE ALARM AUDIO/VISUAL DEVICE
F V	FIRE ALARM VISUAL ONLY DEVICE
F H	FIRE ALARM BEACON
S	SMOKE DETECTOR
S_D	DUCT SMOKE DETECTOR
RTS	REMOTE TEST STATION AND ALARM FOR DUCT SMOKE DETECTOR
H	HEAT DETECTOR, COMBINATION RATE–OF–RISE AND FIXED TEMPERATURE
C	CARBON MONOXIDE DETECTOR
M	INPUT MONITORING MODULE
C	RELAY CONTROL MODULE
FACP	FIRE ALARM CONTROL PANEL
FAA	FIRE ALARM ANNUNCIATOR PANEL
F H	REMOTE ALARM INDICATING LIGHT
F	MASTER BOX
K	KEY DEPOSITORY – KNOX BOX

GENERAL NOTES

1. GENERAL CONTRACTOR TO PROVIDE CONCRETE HOUSEKEEPING AND MOUNTING PADS ON ALL FLOOR AND GRADE MOUNTED ELECTRICAL EQUIPMENT, THE FOLLOWING EQUIPMENT IS THE MINIMUM REQUIREMENT FOR PADS. ADDITIONAL PADS MAYBE REQUIRED BASED ON THE ELECTRICAL CONTRACTORS MOUNTING METHODS, ELECTRICAL CONTRACTOR SHALL COORDINATE WITH GENERAL CONTRACTOR FOR ALL PAD SIZES AND LOCATIONS.
   1.1. OIL FILLED TRANSFORMER
   1.2. SWITCHBOARDS
   1.3. GENERATOR
   1.4. DISTRIBUTION PANELBOARDS
   1.5. DRY TYPE TRANSFORMERS
   1.6. FREE STANDING VFDS AND CONTROL PANELS
2. ALL CONDUIT AND EQUIPMENT SHALL BE INSTALLED AND GROUNDED IN ACCORDANCE WITH THE LATEST EDITION OF THE NATIONAL ELECTRICAL CODE AND APPLICABLE LOCAL CODES.
3. BONDING JUMPERS, CONDUIT CLAMPS AND POINTS OF ATTACHMENT ARE NOT SHOWN ON DRAWINGS. SIZE BONDING JUMPERS IN ACCORDANCE WITH THE NATIONAL ELECTRICAL CODE. THE POINTS OF ATTACHMENT OF THE GROUND CLAMPS SHALL BE ACCESSIBLE LOCATIONS.
4. EQUIPMENT & CONDUIT INSTALLATIONS ARE SHOWN DIAGRAMMATICALLY ONLY AND SHALL BE INSTALLED IN A MANNER TO PREVENT CONFLICTS WITH EQUIPMENT AND STRUCTURAL CONDITIONS. EXPOSED CONDUITS SHALL BE INSTALLED PARALLEL TO BEAMS AND WALLS.
5. CONDUITS SHALL BE TERMINATED SO AS TO PERMIT NEAT CONNECTIONS TO MOTORS AND OTHER EQUIPMENT.
6. NO CONDUIT SMALLER THAN 3/4" PIPE SIZE NOR WIRE SMALLER THAN NO. 12 A.W.G SHALL BE USED UNLESS OTHERWISE NOTED.
7. RECEPTACLES AND SWITCHES SHALL BE MOUNTED 45" ABOVE FINISHED FLOOR.
8. THE WIRING AND BLOCK DIAGRAMS, QUANTITY AND SIZE OF WIRES AND CONDUIT REPRESENT A SUGGESTED ARRANGEMENT BASED UPON SELECTED STANDARD COMPONENTS OF ELECTRICAL AND PROCESS EQUIPMENT. MODIFICATIONS ACCEPTABLE TO THE ENGINEER MAY BE MADE BY THE CONTRACTOR TO ACCOMMODATE EQUIPMENT ACTUALLY PURCHASED. THE BASIC SEQUENCE AND METHOD OF CONTROL MUST BE MAINTAINED AS INDICATED ON THE DRAWINGS AND/OR SPECIFICATIONS.

TEMPORARY WORK NOTES

1. WORK INDICATED AS TEMPORARY SHALL BE DONE ACCORDANCE WITH NEC ARTICLE 590, INSTALLED IN A NEAT MANNER AND WORKMAN LIKE MANNER.
2. THE USE OF PVC CONDUIT, SE CABLE, AND TRAY CABLE WHERE ALLOWED BY NEC SHALL BE ACCEPTABLE FOR TEMPORARY WORK.
3. SE CABLE AND TRAY CABLE FOR INTERIOR TEMPORARY WORK SHALL BE PROPERLY FASTENED TO BUILDING STRUCTURES AND INSTALLED IN SUCH A MANNER NOT TO INHIBIT ACCESS TO AND AROUND EQUIPMENT.
4. SE CABLE FOR EXTERIOR TEMPORARY WORK SHALL BE PROPERLY FASTENED TO BUILDING EXTERIOR SURFACES AND PROPERLY PROTECTED FROM VEHICLE DAMAGE WHERE RUN BETWEEN BUILDINGS.

ABBREVIATIONS

(2)1"C, 3#8, #10GND	2, 1–INCH CONDUITS EACH CONDUIT CONTAINING 3–#8 AWG WIRES AND 1–#10 GROUND CONDUCTOR
3/4" CE	EMPTY CONDUIT. NUMERAL DENOTES SIZE
AFF	ABOVE FINISHED FLOOR
AFG	ABOVE FINISHED GRADE
AR	ALARM RELAY
ATS	AUTOMATIC TRANSFER SWITCH
CR	CONTROL RELAY
CP	CONTROL PANEL
DRG. DWG.	DRAWING
EAN	EXCEPT AS NOTED
EC	ELECTRICAL CONTRACTOR
ETM	ELAPSED TIME METER
FE	FLOW ELEMENT
FIT	FLOW INDICATOR TRANSMITTER
FS	FLOW SWITCH
FT	FLOW TRANSMITTER
FVNR	FULL VOLTAGE NON–REVERSING
GND. GRD	GROUNDING CONDUCTOR (EQUIPMENT)
HOA	HAND–OFF–AUTOMATIC
HH	HANDHOLE
J OR JB	JUNCTION BOX
JPB	JOG PUSHBUTTON
LE	LEVEL ELEMENT
LIT	LEVEL INDICATOR TRANSMITTER
LL	LOW LEVEL
LS	LEVEL SWITCH
LT	LEVEL TRANSMITTER
MC	MOTOR CONTROLLER (STARTER)
MCC	MOTOR CONTROL CENTER
MH	MANHOLE
MFR	MANUFACTURER
MS	MOTION SENSOR
NTS	NOT TO SCALE
OEM	ORIGINAL EQUIOPMENT MANUFACTURE SUPPLIED
OH	OVERHEAD
OL	MOTOR OVERLOAD HEATER
OS	OPERATOR STATION
PB	PUSHBUTTON CONTROL STATION MOMENTARY CONTACT TYPE, STOP START
PBE	PUSHBUTTON CONTROL STATION MAINTAINED EMERGENCY STOP TYPE, TWIST TO RELEASE
PBL	PUSHBUTTON CONTROL STATION MOMENTARY TYPE WITH LOCK–OUT DEVICE, STOP–START
PBM	PUSHBUTTON CONTROL STATION MAINTAINED CONTACT TYPE, STOP START
PIT	PRESSURE INDICATOR TRANSMITTER
PL	PUSHBUTTON CONTROL STATION MOMENTARY TYPE WITH LOCK–OUT DEVICE, STOP
PS	PRESSURE SWITCH
PT	PRESSURE TRANSMITTER
RGS	RIGID GALVANIZED STEEL
RVNR	REDUCED VOLTAGE NON–REVERSING
SPD	SURGE SUPPRESSOR DEVICE
SOV	SOLENOID VALVE
S/S	SOFT STARTER
TB	TERMINAL BOX
TD	MOTOR TEMPERATURE DETECTOR
TR	TIMING RELAY
TS	TEMPERATURE SWITCH
TSP	TWISTED SHEILDED PAIR
TSTW	TWO SPEED TWO WINDING
TYP	TYPICAL
UG	UNDERGROUND
UNO	UNLESS OTHERWISE NOTED
VFD	VARIABLE FREQUENCY DRIVE
WP	WATER PROOF
WSH	HIGH TORQUE SWITCH
XFMR	TRANSFORMER

PREPARED BY

BETA
www.BETA-Inc.com

REGISTERED PROFESSIONAL

SUBCONSULTANT

SAR ENGINEERING, INC.
Mechanical/Electrical Engineers
150 Grossman Drive, Suite 309
Braintree, Massachusetts 02184
617 338-9215
web: www.sar.com

PROJECT

Taunton Wastewater Treatment Facility Improvements Phase 2

Taunton, MA

TITLE

ELECTRICAL LEGEND AND NOTES

NO.	REVISIONS	DATE

DRAWN BY:	RB
DESIGNED BY:	MC
CHECKED BY:	MC
ISSUE DATE:	10/16/2020
BETA JOB NO.:	6050

SCALE

UNLESS OTHERWISE NOTED OR CHANGED BY REPRODUCTION

Not for Construction

SHEET NO.
E-0.1

NOTES:

1 DIESEL PUMP HEADS ARE LOCATED ON TOP OF DIESEL TANK. PROVIDE STANCHION MOUNTED DISCONNECT SWITCHES AND RUN CONDUIT/WIRE UP SIDE OF TANK TO EACH PUMP.

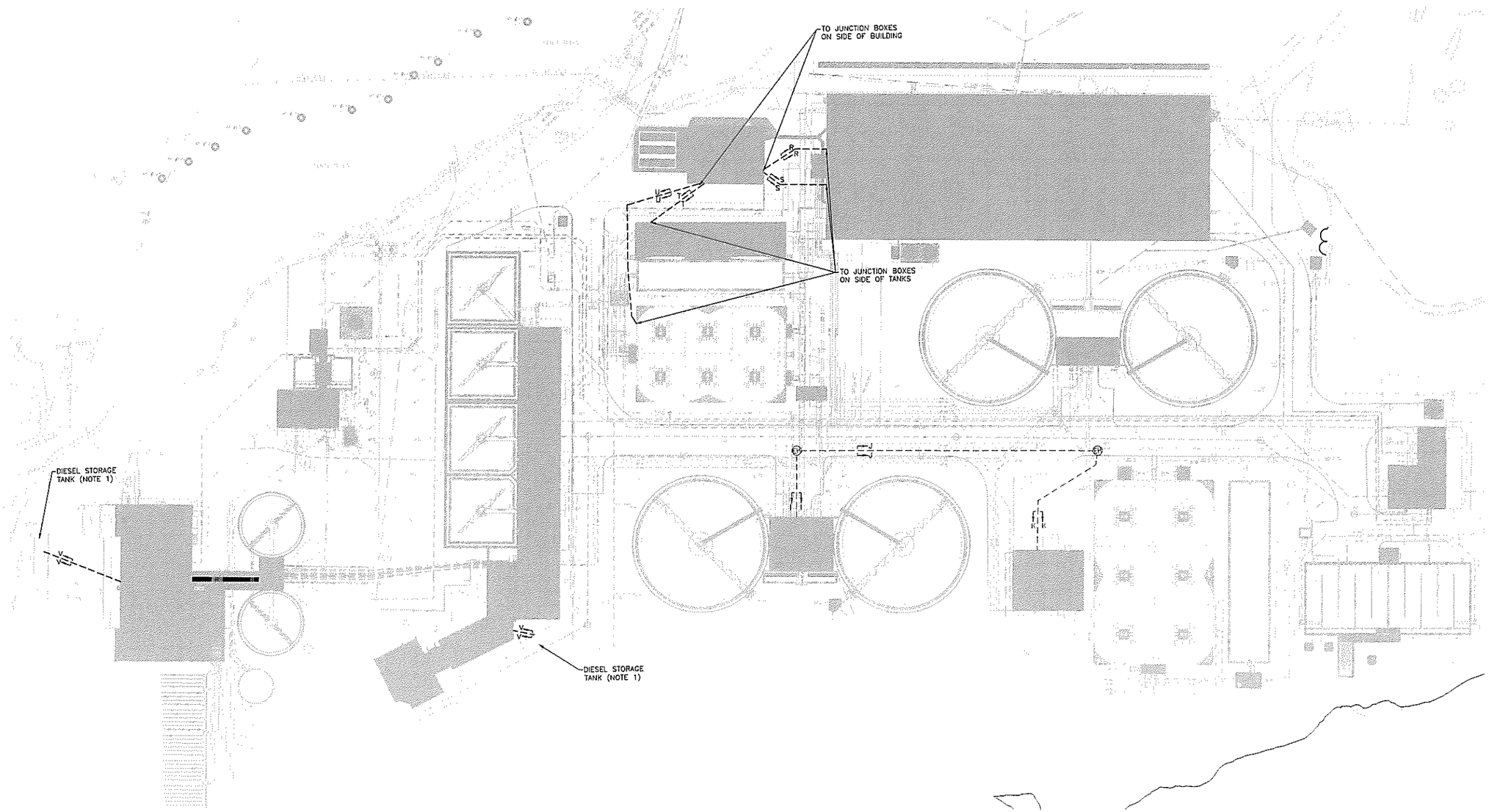

ELECTRICAL SITE PLAN
SCALE: 1" = 40'-0"

PREPARED BY

BETA
www.BETA-Inc.com

REGISTERED PROFESSIONAL

SUBCONSULTANT

SAR ENGINEERING, INC.
Mechanical/Electrical Engineers
150 Grossman Drive, Suite 309
Braintree, Massachusetts 02184
617 328-9315
web: www.sar.com

PROJECT

Taunton Wastewater Treatment Facility Improvements Phase 2

Taunton, MA

TITLE

Electrical Site Plan

NO.	REVISIONS	DATE

DRAWN BY:	RLB
DESIGNED BY:	MC
CHECKED BY:	MC
ISSUE DATE:	10/16/2020
BETA JOB NO.:	5050

SCALE

40 0 40 80
SCALE IN FEET: 1"=40'

UNLESS OTHERWISE NOTED OR CHANGED BY REPRODUCTION

Not for Construction

SHEET NO.

E-0.2

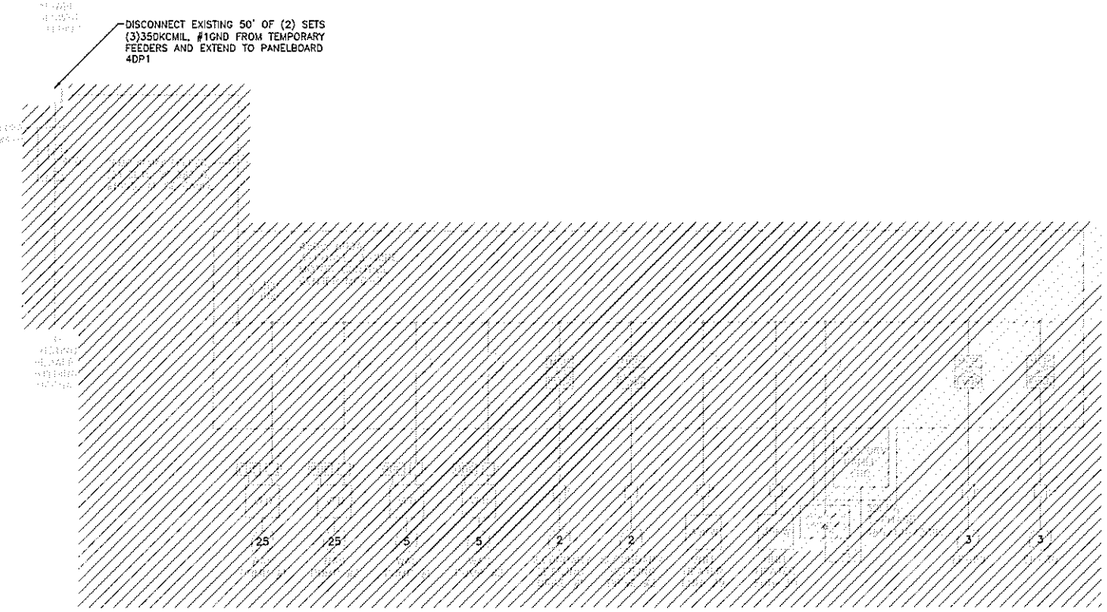

SLUDGE PUMPING STATION #1 ONE LINE DIAGRAM

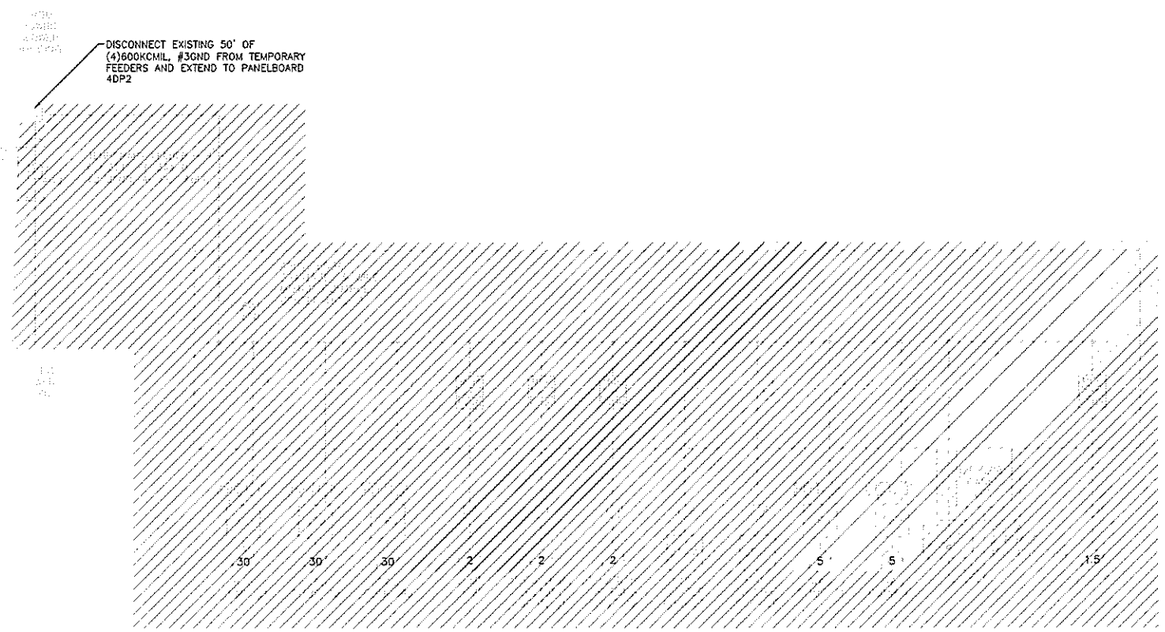

SLUDGE PUMPING STATION #2 ONE LINE DIAGRAM

PREPARED BY

BETA

www.BETA-Inc.com

REGISTERED PROFESSIONAL

SUBCONSULTANT

SAR ENGINEERING, INC.

Mechanical/Electrical Engineers
150 Grossman Drive, Suite 309
Braintree, Massachusetts 02184
617 338-9215
web: www.sar.com

PROJECT

Taunton Wastewater Treatment Facility Improvements Phase 1

Taunton, MA

TITLE

ELECTRICAL SLUDGE PUMPING STATIONS #1 & #2 ONE LINE DIAGRAM - DEMOLITION

NO.	REVISIONS	DATE

DRAWN BY:	RB
DESIGNED BY:	MC
CHECKED BY:	MC
ISSUE DATE:	10/16/2020
BETA JOB NO.:	6050

SCALE

NONE

UNLESS OTHERWISE NOTED OR CHANGED BY REPRODUCTION

For Review Only

SHEET NO.

E-0.3

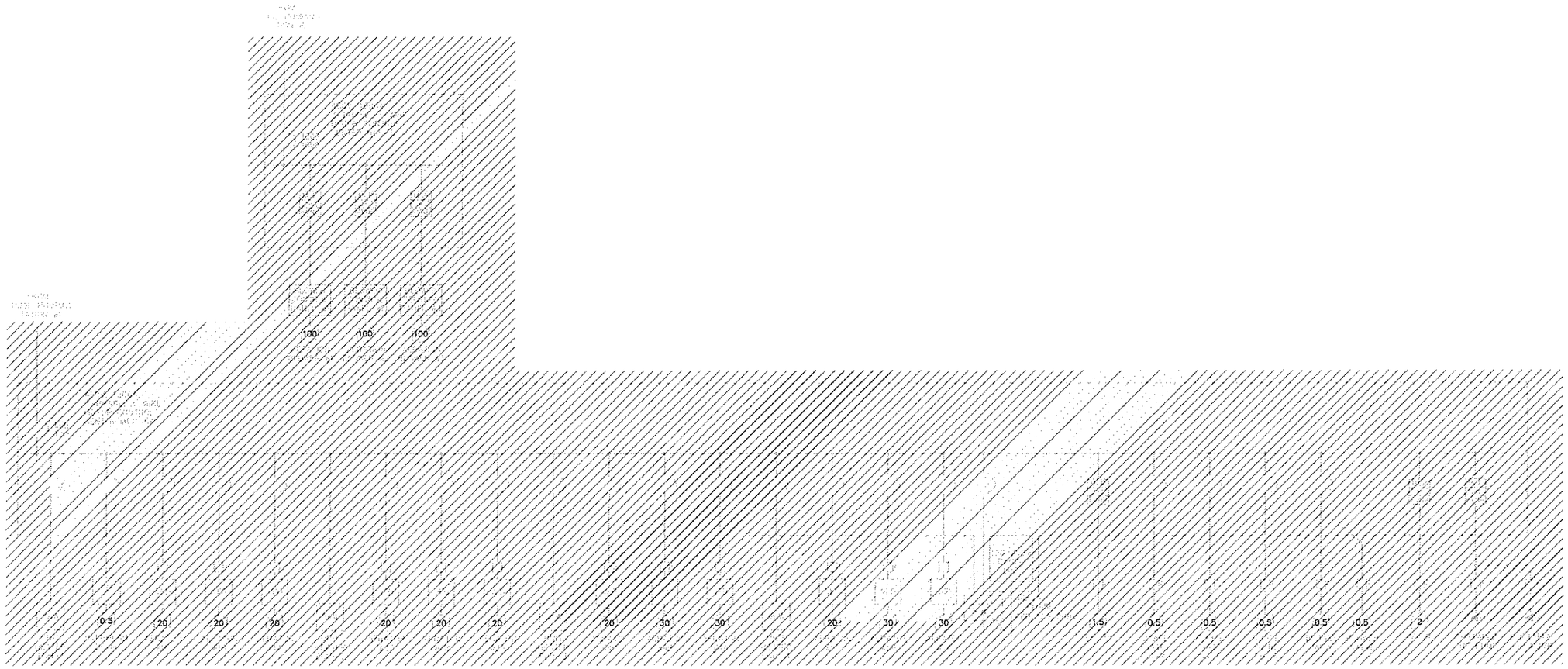

NOT TO SCALE

PREPARED BY

BETA

www.BETA-Inc.com

REGISTERED PROFESSIONAL

SUBCONSULTANT

SAR ENGINEERING, INC.

Mechanical/Electrical Engineers
150 Grossman Drive, Suite 309
Braintree, Massachusetts 02184
617 328-9215
web: www.sar.com

PROJECT

Taunton Wastewater Treatment Facility Improvements Phase 1

Taunton, MA

TITLE

ELECTRICAL
EXISTING BLOWER BUILDING
ONE LINE DIAGRAM - DEMOLITION

NO.	REVISIONS	DATE

DRAWN BY:	RB
DESIGNED BY:	MC
CHECKED BY:	MC
ISSUE DATE:	10/18/2020
BETA JOB NO.:	6050

SCALE

NONE

UNLESS OTHERWISE NOTED OR CHANGED BY REPRODUCTION

For Review Only

SHEET NO.

E-0.4

NOTES

1. SEAL INTERIOR OF CONDUIT FROM TANK WITH ELECTRICAL PUTTY SEALANT AT CONDUIT ENTRANCE INTO DISCONNECT SWITCH.

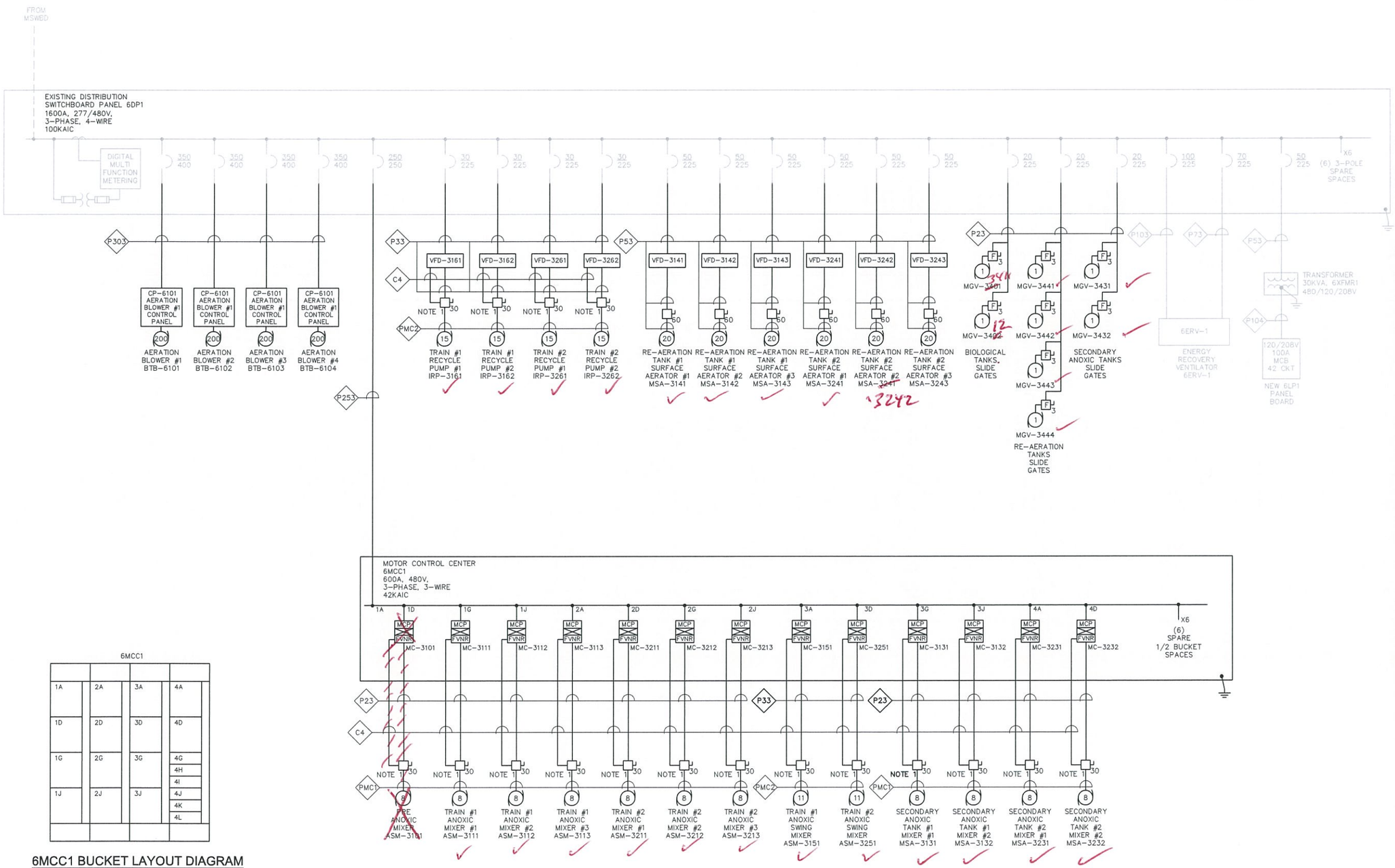

NEW BLOWER BUILDING ONE LINE DIAGRAM

NOT TO SCALE

6MCC1 BUCKET LAYOUT DIAGRAM

NOT TO SCALE

PREPARED BY

BETA
www.BETA-Inc.com

REGISTERED PROFESSIONAL

SUBCONSULTANT

SAR ENGINEERING, INC.
Mechanical/Electrical Engineers
150 Grossman Drive, Suite 309
Braintree, Massachusetts 02184
617 328-9215
web: www.sar.com

PROJECT

Taunton Wastewater Treatment Facility Improvements Phase 1

Taunton, MA

TITLE

ELECTRICAL
NEW BLOWER BUILDING
ONE LINE DIAGRAM

NO.	REVISIONS	DATE

DRAWN BY:	RB
DESIGNED BY:	MC
CHECKED BY:	MC
ISSUE DATE:	10/16/2020
BETA JOB NO.:	6050

SCALE

NONE

UNLESS OTHERWISE NOTED OR CHANGED BY REPRODUCTION

For Review Only

SHEET NO.

E-0.5

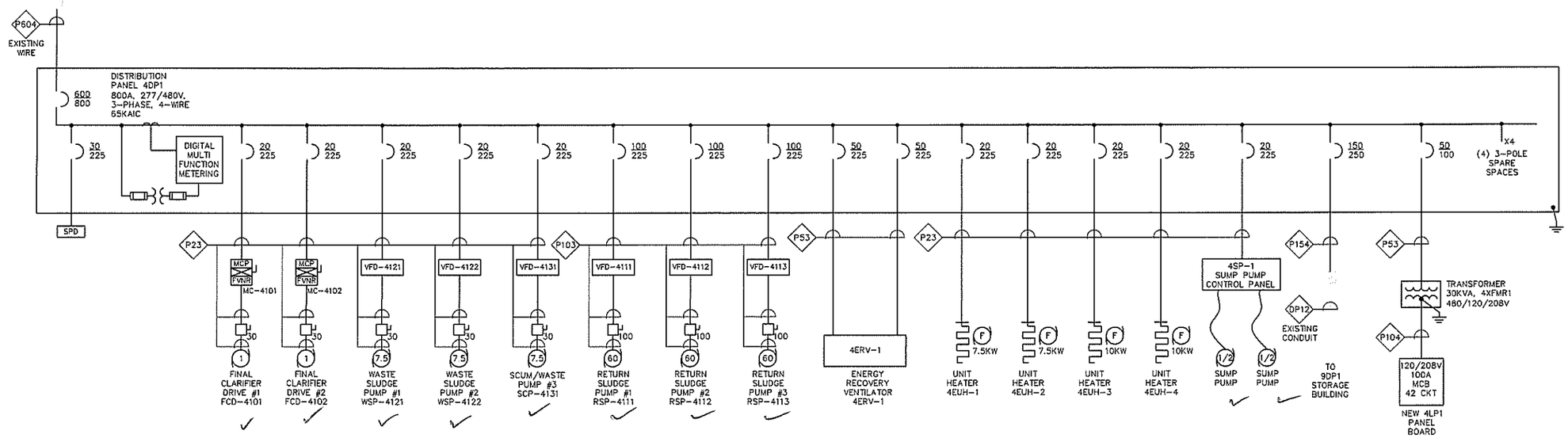

SLUDGE PUMPING STATION #1 ONE LINE DIAGRAM

NOT TO SCALE

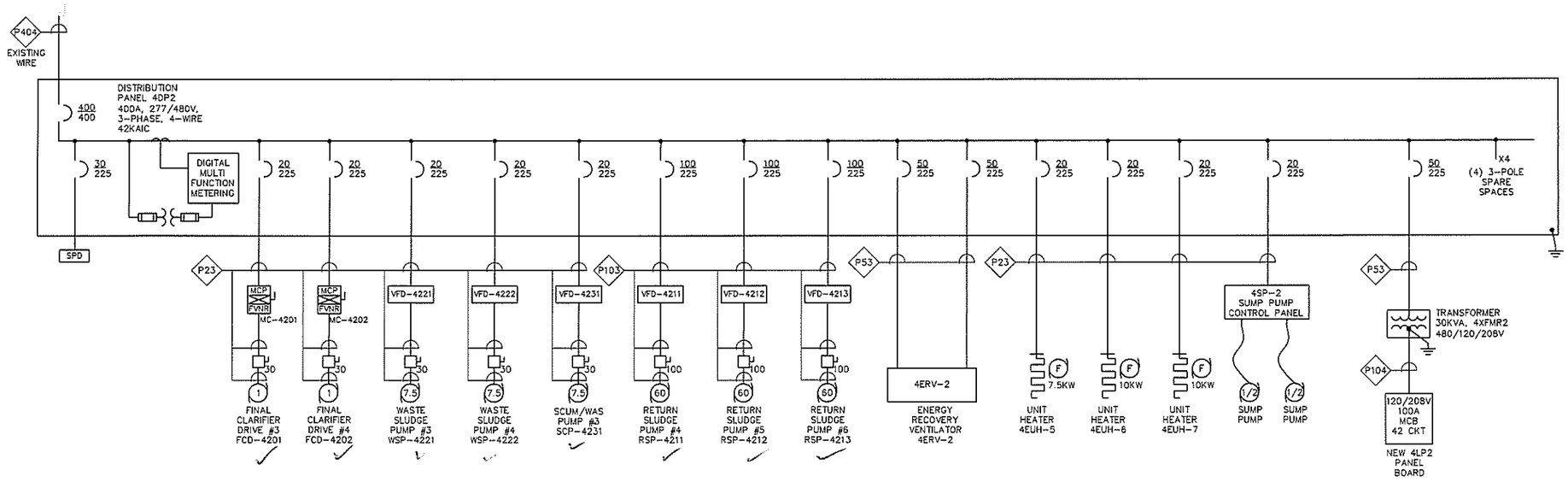

SLUDGE PUMPING STATION #2 ONE LINE DIAGRAM

NOT TO SCALE

PREPARED BY

BETA

www.BETA-Inc.com

REGISTERED PROFESSIONAL

SUBCONSULTANT

SAR ENGINEERING, INC.

Mechanical/Electrical Engineers
150 Grossman Drive, Suite 309
Braintree, Massachusetts 02184
617 328-9215
web: www.sar.com

PROJECT

Taunton Wastewater Treatment Facility Improvements Phase 1

Taunton, MA

TITLE

ELECTRICAL SLUDGE PUMPING STATIONS #1 & #2 ONE LINE DIAGRAM

NO.	REVISIONS	DATE

DRAWN BY:	RB
DESIGNED BY:	MC
CHECKED BY:	MC
ISSUE DATE:	10/16/2020
BETA JOB NO.:	5050

SCALE

NONE

UNLESS OTHERWISE NOTED OR CHANGED BY REPRODUCTION

For Review Only

SHEET NO.

E-0.6

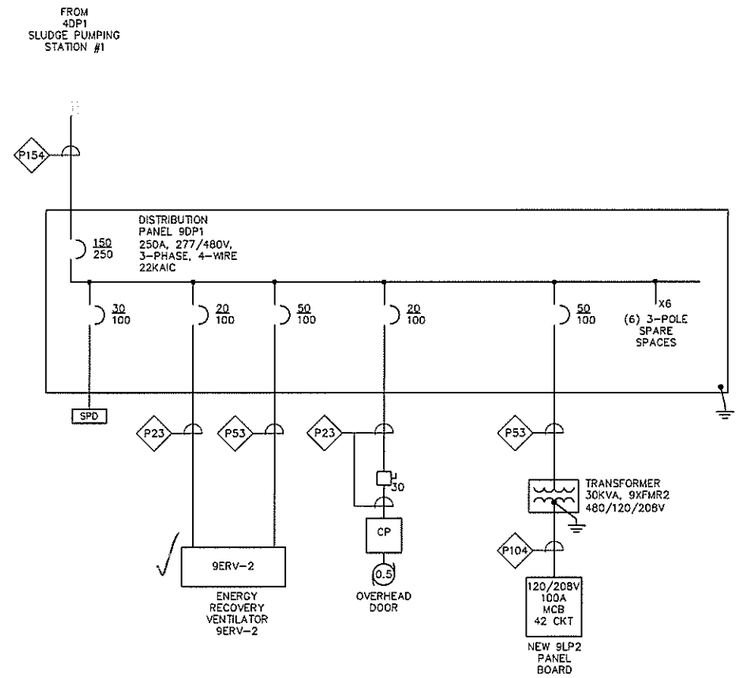

STORAGE BUILDING ONE LINE DIAGRAM

NOT TO SCALE

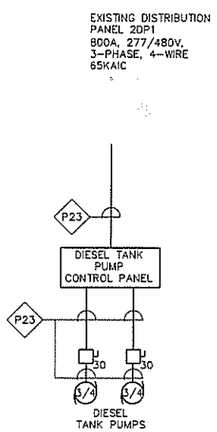

OPERATIONS BUILDING ONE LINE DIAGRAM

NOT TO SCALE

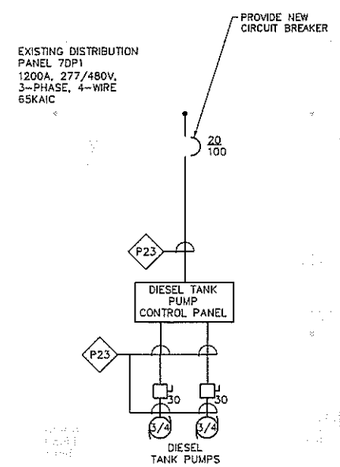

SOLIDS HANDLING BUILDING ONE LINE DIAGRAM

NOT TO SCALE

PREPARED BY

BETA

www.BETA-Inc.com

REGISTERED PROFESSIONAL

SUBCONSULTANT

SAR ENGINEERING, INC.

Mechanical/Electrical Engineers
150 Grossman Drive, Suite 309
Braintree, Massachusetts 02184
617 328-9215
webc www.sar.com

PROJECT

Taunton Wastewater Treatment Facility Improvements Phase 1

Taunton, MA

TITLE

ELECTRICAL STORAGE BUILDING ONE LINE DIAGRAM

NO.	REVISIONS	DATE

DRAWN BY:	RB
DESIGNED BY:	MC
CHECKED BY:	MC
ISSUE DATE:	10/16/2020
BETA JOB NO.:	6050

SCALE

NONE

UNLESS OTHERWISE NOTED OR CHANGED BY REPRODUCTION

For Review Only

SHEET NO. E-0.7

PANELBOARD SCHEDULE

NO. 4LP1 — LOCATION: SLUDGE PUMP STATION #1

120/208 V, 3 PH, 4 W, 100 A MAINS — 100 A SOLID NEUTRAL — 100 A MCB

10,000 AIC AT 120 V — 100 A GROUND BUS — – A MLO — SURFACE MOUNTING

CIRCUIT	DESCRIPTION OF LOAD	LOAD (KVA) Aø	Bø	Cø	BREAKER TRIP	POLE	BREAKER POLE	TRIP	LOAD (KVA) Aø	Bø	Cø	DESCRIPTION OF LOAD	CIRCUIT
1	UPPER LEVEL & EXTERIOR LIGHTING	0.6			20	1	1	20	0.4			FLOW METERS	2
3	LOWER LEVEL LIGHTING		0.5		20	1	1	20		0.2		LEVEL TRANSMITTER	4
5	UPPER LEVEL RECETPACLES			0.8	20	1	1	20			1.0	RTU-4A SCADA CONTROL PANEL	6
7	LOWER LEVEL RECEPTACLES	0.8			20	1	1	20	0.4			CLARIFIER RECEPTACLES	8 *
9	ROOF RECEPTACLE & LIGHT		0.25		20	1	1	20		0.45		CLARIFIER LIGHTS	10
11	FIRE ALARM CONTROL PANEL			0.50	20	1	1	20			0.4	EXTERIOR RECEPTACLE	12 *
13	SPARE	–			20	1	1	20	–			SPARE	14
15	SPARE		–		20	1	1	20		–		SPARE	16
17	SPARE			–	20	1	1	20			–	SPARE	18
19	SPARE	–			20	1	1	20	–			SPARE	20
21	SPARE		–		20	1	1	20		–		SPARE	22
23	SPARE			–	20	1	1	20			–	SPARE	24
25	SPARE	–			20	1	1	20	–			SPARE	26
27	SPARE		–		20	1	1	20		–		SPARE	28
29	SPARE			–	20	1	1	20			–	SPARE	30
31	SPARE	–			20	1	1	20	–			SPARE	32
33	SPARE		–		20	1	1	20		–		SPARE	34
35	SPARE			–	20	1	1	20			–	SPARE	36
37	SPARE	–			20	1	1	20	–			SPARE	38
39	SPARE		–		20	1	1	20		–		SPARE	40
41	SPARE			–	20	1	1	20			–	SPARE	42
SUB-TOTAL CONNECTED		–	–	–					–	–	–	SUB-TOTAL CONNECTED	

*PROVIDE GFCI BREAKER

SUB-TOTAL CONNECTED KVA Aø = –
SUB-TOTAL CONNECTED KVA Bø = –
SUB-TOTAL CONNECTED KVA Cø = –
TOTAL CONNECTED KVA = –

PANELBOARD SCHEDULE

NO. 4LP2 — LOCATION: SLUDGE PUMP STATION #2

120/208 V, 3 PH, 4 W, 100 A MAINS — 100 A SOLID NEUTRAL — 100 A MCB

10,000 AIC AT 120 V — 100 A GROUND BUS — – A MLO — SURFACE MOUNTING

CIRCUIT	DESCRIPTION OF LOAD	LOAD (KVA) Aø	Bø	Cø	BREAKER TRIP	POLE	BREAKER POLE	TRIP	LOAD (KVA) Aø	Bø	Cø	DESCRIPTION OF LOAD	CIRCUIT
1	UPPER LEVEL & EXTERIOR LIGHTING	0.3			20	1	1	20	0.4			FLOW METERS	2
3	LOWER LEVEL LIGHTING		0.5		20	1	1	20		0.2		LEVEL TRANSMITTER	4
5	UPPER LEVEL RECETPACLES			0.6	20	1	1	20			1.0	RTU-4B SCADA CONTROL PANEL	6
7	LOWER LEVEL RECEPTACLES	0.8			20	1	1	20	0.4			CLARIFIER RECEPTACLES	8 *
9	ROOF RECEPTACLE & LIGHT		0.25		20	1	1	20		0.45		CLARIFIER LIGHTS	10
11	FIRE ALARM CONTROL PANEL			0.50	20	1	1	20			0.4	EXTERIOR RECEPTACLE	12 *
13	SPARE	–			20	1	1	20	–			SPARE	14
15	SPARE		–		20	1	1	20		–		SPARE	16
17	SPARE			–	20	1	1	20			–	SPARE	18
19	SPARE	–			20	1	1	20	–			SPARE	20
21	SPARE		–		20	1	1	20		–		SPARE	22
23	SPARE			–	20	1	1	20			–	SPARE	24
25	SPARE	–			20	1	1	20	–			SPARE	26
27	SPARE		–		20	1	1	20		–		SPARE	28
29	SPARE			–	20	1	1	20			–	SPARE	30
31	SPARE	–			20	1	1	20	–			SPARE	32
33	SPARE		–		20	1	1	20		–		SPARE	34
35	SPARE			–	20	1	1	20			–	SPARE	36
37	SPARE	–			20	1	1	20	–			SPARE	38
39	SPARE		–		20	1	1	20		–		SPARE	40
41	SPARE			–	20	1	1	20			–	SPARE	42
SUB-TOTAL CONNECTED		–	–	–					–	–	–	SUB-TOTAL CONNECTED	

*PROVIDE GFCI BREAKER

SUB-TOTAL CONNECTED KVA Aø = –
SUB-TOTAL CONNECTED KVA Bø = –
SUB-TOTAL CONNECTED KVA Cø = –
TOTAL CONNECTED KVA = –

PANELBOARD SCHEDULE

NO. 9LP2 — LOCATION: STORAGE BUILDING (OLD BLOWER BUILDING)

120/208 V, 3 PH, 4 W, 100 A MAINS — 100 A SOLID NEUTRAL — 100 A MCB

10,000 AIC AT 120 V — 100 A GROUND BUS — – A MLO — SURFACE MOUNTING

CIRCUIT	DESCRIPTION OF LOAD	LOAD (KVA) Aø	Bø	Cø	BREAKER TRIP	POLE	BREAKER POLE	TRIP	LOAD (KVA) Aø	Bø	Cø	DESCRIPTION OF LOAD	CIRCUIT
1	LIGHTING	0.70			20	1	1	20	–			SPARE	2
3	RECEPTACLES		1.08		20	1	1	20		–		SPARE	4
5	RECEPTACLES			1.08	20	1	1	20			–	SPARE	6
7	FIRE ALARM CONTROL PANEL	0.50			20	1	1	20	–			SPARE	8
9	ROOF RECEPTACLE & LIGHT		0.25		20	1	1	20		–		SPARE	10
11	SPARE			–	20	1	1	20			–	SPARE	12
13	SPARE	–			20	1	1	20	–			SPARE	14
15	SPARE		–		20	1	1	20		–		SPARE	16
17	SPARE			–	20	1	1	20			–	SPARE	18
19	SPARE	–			20	1	1	20	–			SPARE	20
21	SPARE		–		20	1	1	20		–		SPARE	22
23	SPARE			–	20	1	1	20			–	SPARE	24
25	SPARE	–			20	1	1	20	–			SPARE	26
27	SPARE		–		20	1	1	20		–		SPARE	28
29	SPARE			–	20	1	1	20			–	SPARE	30
31	SPARE	–			20	1	1	20	–			SPARE	32
33	SPARE		–		20	1	1	20		–		SPARE	34
35	SPARE			–	20	1	1	20			–	SPARE	36
37	SPARE	–			20	1	1	20	–			SPARE	38
39	SPARE		–		20	1	1	20		–		SPARE	40
41	SPARE			–	20	1	1	20			–	SPARE	42
SUB-TOTAL CONNECTED		–	–	–					–	–	–	SUB-TOTAL CONNECTED	

*PROVIDE GFCI BREAKER

SUB-TOTAL CONNECTED KVA Aø = –
SUB-TOTAL CONNECTED KVA Bø = –
SUB-TOTAL CONNECTED KVA Cø = –
TOTAL CONNECTED KVA = –

PANELBOARD SCHEDULE

6LP1 – EXISTING

			1.0		BIOLOGICAL TANKS ANALZYERS – TRAIN 1
				1.0	BIOLOGICAL TANKS ANALZYERS – TRAIN 2
			0.8		SECONDARY ANOXIC TANK ANALYZERS
				0.4	RE-AERATION TANKS ANAYZERS
FLOW METERS – BLOWERS		1.0		0.75	AIR FLOW METERS – TRAIN 1
BLOWER HEADER UNLOADING VALVE	1.1		0.75		AIR FLOW METERS – TRAIN 2
BLOWER MASTER CONTROL PANEL CP-6000		0.5		2.2	AERATION VALVES – TRAIN 1
MICRO-C CONTROL PANEL CP-3600		0.25		2.2	AERATION VALVES – TRAIN 1
BIOLOGICAL TANKS LIGHTS	0.21		2.2		AERATION VALVES – TRAIN 2
RE-AERATION & SECONDARY ANOXIC TANKS LIGHTS		0.19		2.2	AERATION VALVES – TRAIN 2
BIOLOGICAL TANKS RECEPTACLES		1.4		0.50	MICRO-C CHEMICAL PUMPS
RE-AERATION & SECONDARY ANOXIC TANKS RECEPTACLES	1.2		0.25		MICRO-C CHEMICAL PUMP
				0.50	LEVEL TRANSMITTERS LIT-3611 & LIT-3612

12.20
6.80
5.90
24.90

PREPARED BY

BETA
www.BETA-Inc.com

REGISTERED PROFESSIONAL

SUBCONSULTANT

SAR ENGINEERING, INC.
Mechanical/Electrical Engineers
150 Grossman Drive, Suite 309
Braintree, Massachusetts 02184
617 328-9215
web: www.sar.com

PROJECT

Taunton Wastewater Treatment Facility Improvements Phase 2

Taunton, MA

TITLE

ELECTRICAL PANELBOARD SCHEDULES

NO.	REVISIONS	DATE

DRAWN BY:	RB
DESIGNED BY:	MC
CHECKED BY:	MC
ISSUE DATE:	10/16/2020
BETA JOB NO.:	6050

SCALE

UNLESS OTHERWISE NOTED OR CHANGED BY REPRODUCTION

For Review Only

SHEET NO. E-0.08

POWER CABLE/CONDUIT SCHEDULE

SYMBOL	CONDUIT SIZE	CONDUCTORS	GND*
P22	3/4"	(2)#12	(1)#12
P23	3/4"	(3)#12	(1)#12
P26	3/4"	(6)#12	(1)#12
P32	3/4"	(2)#10	(1)#10
P33	3/4"	(3)#10	(1)#10
P53	3/4"	(3)#8	(1)#10
P54	3/4"	(4)#8	(1)#10
P63	1"	(3)#6	(1)#8
P64	1"	(4)#6	(1)#8
P83	1 1/4"	(3)#4	(1)#8
P84	1 1/4"	(4)#4	(1)#8
P103	1 1/2"	(3)#3	(1)#6
P104	1 1/2"	(4)#3	(1)#6
P113	1 1/2"	(3)#2	(1)#6
P114	1 1/2"	(4)#2	(1)#6
P133	2"	(3)#1	(1)#6
P134	2"	(4)#1	(1)#6
P153	2"	(3)#1/0	(1)#6
P154	2"	(4)#1/0	(1)#6
P173	2 1/2"	(3)#2/0	(1)#6
P174	2 1/2"	(4)#2/0	(1)#6
P203	2 1/2"	(3)#3/0	(1)#4
P204	2 1/2"	(4)#3/0	(1)#4
P233	3"	(3)#4/0	(1)#4
P234	3"	(4)#4/0	(1)#4
P253	3"	(3)250KCMIL	(1)#4
P254	3"	(4)250KCMIL	(1)#4
P303	3"	(3)350KCMIL	(1)#4
P304	3"	(4)350KCMIL	(1)#4
P403	4"	(3)500KCMIL	(1)#3
P404	4"	(4)500KCMIL	(1)#3
P804	(2)4"	(8)500KCMIL	(2)#1/0
PMC1	1 1/2" THRU TANK SLAB	MANUFACTURE SUPPLIED MOTOR CABLE	
PMC2	2" THRU TANK SLAB	MANUFACTURE SUPPLIED MOTOR CABLE	

SIGNAL CABLE/CONDUIT SCHEDULE

SYMBOL	CONDUIT SIZE	CONDUCTORS
S	1"	VENDER PROVIDED
S1	3/4"	1-2/C#16 TSP
S13	3/4"	1-3/C#16 TSP
S2	3/4"	2-2/C#16 TSP
S23	3/4"	2-3/C#16 TSP
S3	1"	3-2/C#16 TSP
S33	1"	3-3/C#16 TSP
S4	1"	4-2/C#16 TSP
S5	1"	5-2/C#16 TSP
S6	1 1/2"	6-2/C#16 TSP
S7	1 1/2"	7-2/C#16 TSP
S8	1 1/2"	8-2/C#16 TSP
S9	1 1/2"	9-2/C#16 TSP
S10	2"	10-2/C#16 TSP
TC1	3/4"	8/C#18

TELE/DATA CABLE/CONDUIT SCHEDULE

SYMBOL	CONDUIT SIZE	CABLES
TD1	1"	1-CAT6
TD2	1"	2-CAT6
FO6	1"	6 STRAND FIBER OPTIC
FO12	2"	12 STRAND FIBER OPTIC

CONTROL CABLE/CONDUIT SCHEDULE

SYMBOL	CONDUIT SIZE	CONDUCTORS
C2	3/4"	2#14
C4	3/4"	4#14
C5	3/4"	5#14
C6	3/4"	6#14
C7	3/4"	7#14
C8	3/4"	8#14
C9	3/4"	9#14
C10	3/4"	10#14
C12	3/4"	12#14
C16	1"	16#14
C20	1"	20#14
C30	1"	30#14
C50	1 1/2"	50#14

NOTE: CONDUIT AND CONDUCTOR SIZES ARE TO BE PER THE ABOVE SCHEDULES UNLESS OTHERWISE NOTED.

LIGHTING FIXTURE SCHEDULE

TYPE	DESCRIPTION	MANUFACTURER & CATALOG SERIES	LAMPS TYPE	LAMPS LUMENS	VOLTS	WATTS	MOUNTING TYPE	MOUNTING HEIGHT	REMARKS
F1	96" LED ENCLOSED AND GASKETED INDUSTRIAL LIGHTING FIXTURE.	LITHONIA FEM-L96-9000LM-IMAFL-MVOLT-35K-80CRI	LED 3500K	8124lm	120	54	PENDANT	13'-5"ABOVE FINISHED FLOOR UNLESS OTHERWISE NOTED	
F2	48" LED ENCLOSED AND GASKETED INDUSTRIAL LIGHTING FIXTURE.	LITHONIA FEM-L48-4000LM-IMAFL-MVOLT-35K-80CRI	LED 3500K	3615lm	120	24	PENDANT	13'-5"ABOVE FINISHED FLOOR UNLESS OTHERWISE NOTED	
F3	48" LED ENCLOSED AND GASKETED INDUSTRIAL LIGHTING FIXTURE.	LITHONIA FEM-L48-4000LM-IMAFL-MVOLT-35K-80CRI	LED 3500K	3615lm	120	24	SURFACE		
F7	LED FLOOD LIGHT KNUCKLE MOUNT WITH 1/2" THREADED PIPE	LITHONIA OFL1-LED-P1-40K-MVOLT-THK-M	LED 4000K	2295lm	120	21	PIPE		
	SELF CONTAINED EMERGENCY LIGHTING BATTERY UNIT NEMA 4 WITH TWO LIGHTING HEADS	REFER TO SPECIFICATIONS	LED	–	120	8	WALL		INSTALL 3/4"C, 2#12, 1#12GND TO REMOTE HEADS
	SEALED-BEAM WEATHERPROOF REMOTE LIGHTING FIXTURE WITH TWO LIGHTING HEADS	REFER TO SPECIFICATIONS	LED	–	120	8	WALL		
	EMERGENCY EXIT SIGN LED TYPE WITH BATTERY BACK-UP NEMA 4X	REFER TO SPECIFICATIONS	LED	–	120	3	WALL		

LIGHTING FIXTURE SCHEDULES NOTES:

1. THE CATALOG NUMBERS LISTED ARE GIVEN AS A GUIDE TO THE DESIGN AND QUALITY OF FIXTURE DESIRED. EQUIVALENT DESIGNS, MATERIALS, DIMENSIONS, COEFFICIENT OF UTILIZATIONS AND EQUAL QUALITY FIXTURES OF OTHER MANUFACTURERS WILL BE ACCEPTABLE.

PREPARED BY

BETA
www.BETA-Inc.com

REGISTERED PROFESSIONAL

SUBCONSULTANT

SAR ENGINEERING, INC.
Mechanical/Electrical Engineers
150 Grossman Drive, Suite 309
Braintree, Massachusetts 02184
617 338-9315
web: www.sar.com

PROJECT

Taunton Wastewater Treatment Facility Improvements Phase 2

Taunton, MA

TITLE

ELECTRICAL PANELBOARD, LIGHTING, & CABLE/CONDUIT SCHEDULES

NO.	REVISIONS	DATE

DRAWN BY:	RB
DESIGNED BY:	MC
CHECKED BY:	MC
ISSUE DATE:	10/16/2020
BETA JOB NO.:	6050

SCALE

UNLESS OTHERWISE NOTED OR CHANGED BY REPRODUCTION

For Review Only

SHEET NO. E-0.09

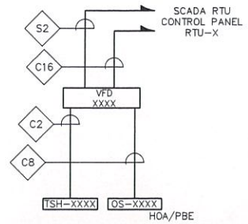

CONTROL BLOCK WIRING DIAGRAM
RETURN, WASTE, AND SCUM/WASTE SLUDGE PUMPS

NOT TO SCALE

TYPICAL FOR:

- VFD-4111/OS-4111/TSH-4111 – RTU-4A
- VFD-4112/OS-4112/TSH-4112 – RTU-4A
- VFD-4113/OS-4113/TSH-4113 – RTU-4A
- VFD-4121/OS-4121/TSH-4121 – RTU-4A
- VFD-4122/OS-4122/TSH-4122 – RTU-4A
- VFD-4131/OS-4131/TSH-4131 – RTU-4A
- VFD-4211/OS-4211/TSH-4211 – RTU-4B
- VFD-4212/OS-4212/TSH-4212 – RTU-4B
- VFD-4213/OS-4213/TSH-4213 – RTU-4B
- VFD-4221/OS-4221/TSH-4221 – RTU-4B
- VFD-4222/OS-4222/TSH-4222 – RTU-4B
- VFD-4231/OS-4231/TSH-4231 – RTU-4B

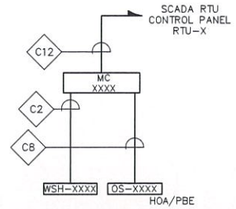

CONTROL BLOCK WIRING DIAGRAM
CLARIFIER DRIVES

NOT TO SCALE

TYPICAL FOR:

- MC-4101/OS-4101/WSH-4101 – RTU-4A
- MC-4102/OS-4102/WSH-4102 – RTU-4A
- MC-4201/OS-4201/WSH-4201 – RTU-4B
- MC-4202/OS-4202/WSH-4202 – RTU-4B

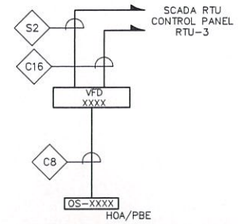

CONTROL BLOCK WIRING DIAGRAM
RECYCLE PUMPS

NOT TO SCALE

TYPICAL FOR:

- VFD-3161/OS-3161
- VFD-3162/OS-3162
- VFD-3261/OS-3261
- VFD-3262/OS-3262

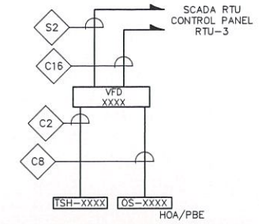

CONTROL BLOCK WIRING DIAGRAM
SURFACE AERATORS

NOT TO SCALE

TYPICAL FOR:

- VFD-3141/OS-3141/TSH-3141
- VFD-3142/OS-3142/TSH-3142
- VFD-3143/OS-3143/TSH-3143
- VFD-3241/OS-3241/TSH-3241
- VFD-3242/OS-3242/TSH-3242
- VFD-3243/OS-3243/TSH-3243

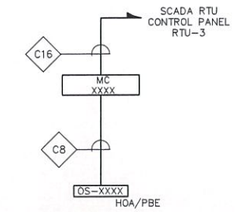

CONTROL BLOCK WIRING DIAGRAM
ANOXIC MIXERS

NOT TO SCALE

TYPICAL FOR:

- ~~MC-3101/OS-3101~~
- MC-3111/OS-3111
- MC-3112/OS-3112
- MC-3113/OS-3113
- MC-3131/OS-3131
- MC-3132/OS-3132
- MC-3151/OS-3151
- MC-3211/OS-3211
- MC-3212/OS-3212
- MC-3213/OS-3213
- MC-3231/OS-3231
- MC-3232/OS-3232
- MC-3251/OS-3251

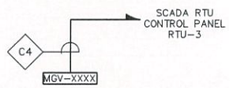

CONTROL BLOCK WIRING DIAGRAM
SLIDE GATES

NOT TO SCALE

TYPICAL FOR:

- MGV-~~3401~~ 3411
- MGV-~~3402~~ 3412
- MGV-3431
- MGV-3432
- MGV-3441
- MGV-3442
- MGV-3443
- MGV-3444

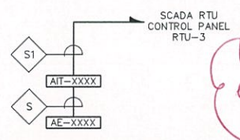

SINGLE V.S. DUAL? WHY?

CONTROL BLOCK WIRING DIAGRAM
SINGLE ANALYZERS

NOT TO SCALE

TYPICAL FOR:

DO
- AE-3503/AIT-3503
- AE-3504/AIT-3504
- AE-3~~508~~/AIT-3~~508~~ 10 NH4
- AE-3513/AIT-3513
- AE-3523/AIT-3523
- AE-3524/AIT-3524 DO
- AE-3~~528~~/AIT-3~~528~~ 30 NHY
- AE-3533/AIT-3533

30

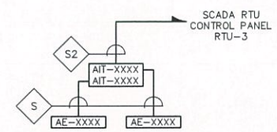

CONTROL BLOCK WIRING DIAGRAM
DUAL ANALYZERS

NOT TO SCALE

TYPICAL FOR:

- AE-3501/AIT-3501, AE-3502/AIT-3502 PH
- AE-3505/AIT-3505, AE-3506/AIT-3506 PH
- AE-3507/AIT-3507, AE-3508/AIT-3508 NO3
- AE-3511/AIT-3511, AE-3512/AIT-3512 NO3
- AE-3521/AIT-3521, AE-3522/AIT-3522 PH
- AE-3525/AIT-3525, AE-3526/AIT-3526 PH
- AE-3527/AIT-3527, AE-3528/AIT-3528 NO3
- AE-3531/AIT-3531, AE-3532/AIT-3532 NO3

DO DO DO DO DO DO DO DO

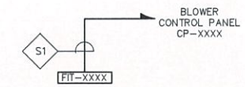

CONTROL BLOCK WIRING DIAGRAM
BLOWER THERMAL MASS FLOW METERS

NOT TO SCALE

TYPICAL FOR:

- FIT-3171/CP-6000
- FIT-3172/CP-6000
- FIT-3173/CP-6000
- FIT-3271/CP-6000
- FIT-3272/CP-6000
- FIT-3273/CP-6000
- FIT-6102/CP-6101
- FIT-6202/CP-6201
- FIT-6302/CP-6301
- FIT-6402/CP-6401

FIT 3174
FIT 3274

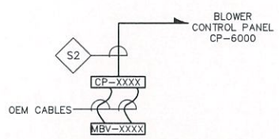

CONTROL BLOCK WIRING DIAGRAM
AERATION VALVES

NOT TO SCALE

TYPICAL FOR:

- MBV-3171/CP-3171
- MBV-3172/CP-3172
- MBV-3173/CP-3173
- MBV-3174/CP-3174
- MBV-3271/CP-3271
- MBV-3272/CP-3272
- MBV-3273/CP-3273
- MBV-3274/CP-3274
- ~~MBV-6502/CP-6502~~

MBV 3175
MBV 3275

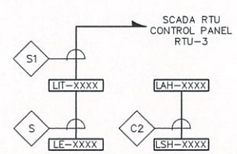

CONTROL BLOCK WIRING DIAGRAM
MICRO-C TANKS LEVEL MONITORING

NOT TO SCALE

TYPICAL FOR:

- LE-3611/LIT-3611/LSH-3611/LAH-3611
- LE-3612/LIT-3612/LSH-3612/LAH-3612

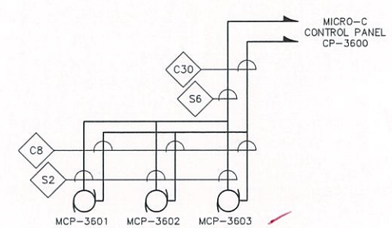

CONTROL BLOCK WIRING DIAGRAM
MICRO-C FEED PUMPS

NOT TO SCALE

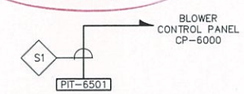

CONTROL BLOCK WIRING DIAGRAM
PRESSURE TRANSMITTERS

NOT TO SCALE

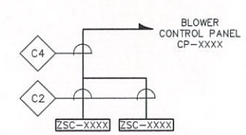

CONTROL BLOCK WIRING DIAGRAM
VALVE POSITION SWITCHES

NOT TO SCALE

TYPICAL FOR:

- ZSC-6103/ZSC-6104/CP-6101
- ZSC-6203/ZSC-6204/CP-6201
- ZSC-6303/ZSC-6204/CP-6301
- ZSC-6403/ZSC-6204/CP-6401

4
4

PREPARED BY

BETA
www.BETA-Inc.com

REGISTERED PROFESSIONAL

SUBCONSULTANT

SAR ENGINEERING, INC.
Mechanical/Electrical Engineers
150 Grossman Drive, Suite 309
Braintree, Massachusetts 02184
617 328-9315
web: www.sar.com

PROJECT

Taunton Wastewater Treatment Facility Improvements Phase 2

Taunton, MA

TITLE

ELECTRICAL CONTROL BLOCK WIRING DIAGRAMS

NO.	REVISIONS	DATE

DRAWN BY:	RB
DESIGNED BY:	MC
CHECKED BY:	MC
ISSUE DATE:	10/16/2020
BETA JOB NO.:	6050

SCALE

UNLESS OTHERWISE NOTED OR CHANGED BY REPRODUCTION

For Review Only

SHEET NO. E-0.10

2/12/2021 11:42 AM P:\YEAR - 2016\6009.00 - TAUNTON WWTF UPGRADES\ELECTRICAL DEPARTMENT\PHASE 2\18009.00 ELEC DIAGRAMS AND DETAILS - PHASE 2.DWG (BETA STB BW.STB)

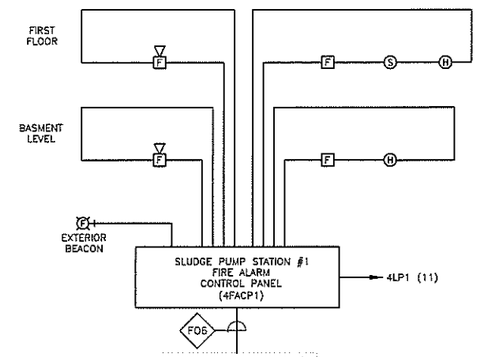

FIRE ALARM NOTES:

1. RISER DIAGRAM ONLY REPRESENTS TYPE OF DEVICES WITHIN AN AREA AND DOES NOT REPRESENT ACTUAL QUANTITIES. REFER TO PLAN DRAWINGS FOR EXACT QUANTITIES AND LOCATIONS OF DEVICES.
2. MINIMUM SIZE CONDUIT SHALL BE 3/4" UNLESS NOTED OTHERWISE.
3. SYSTEM CONDUIT/CABLING SHALL BE INSTALLED IN ACCORDANCE WITH EQUIPMENT SUPPLIERS APPROVED SHOP DRAWINGS AND WIRING DIAGRAMS.
4. PROVIDE RED COLORED CIRCUIT BREAKER HANDLE LOCK ON POWER CIRCUIT. HANDLE LOCK SHALL ALLOW THE CIRCUIT BREAKER TO TRIP, BUT PREVENT SWITCHING OF THE CIRCUIT BREAKER TO THE "OFF" POSITION.
5. ALL COMPONENTS OF THE SYSTEM SHALL BE MOUNTED IN ACCORDANCE WITH ADA REQUIREMENTS.
6. THE FIRE ALARM SYSTEM SHALL BE ADDRESSABLE TYPE. CONTRACTOR TO PROVIDE THE NECESSARY INTERFACE MODULES FOR THE FIRE ALARM DEVICES THAT REQUIRES THEM.

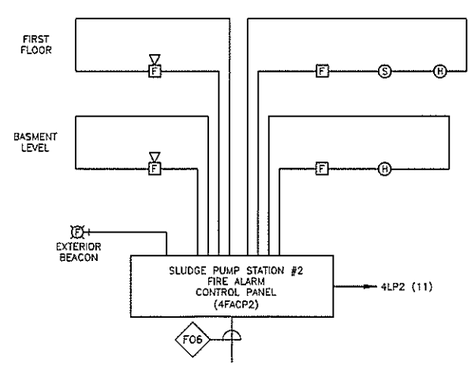

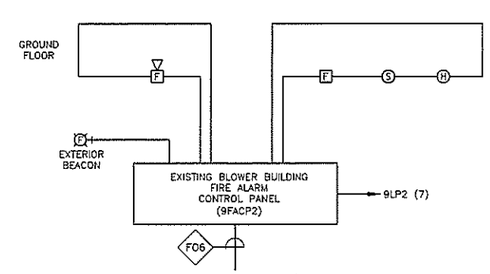

FIRE ALARM RISERS & PANEL INTERCONNECTION DIAGRAM

NOT TO SCALE

PREPARED BY

BETA

www.BETA-Inc.com

REGISTERED PROFESSIONAL

SUBCONSULTANT

SAR ENGINEERING, INC.

Mechanical/Electrical Engineers
150 Grossman Drive, Suite 309
Braintree, Massachusetts 02184
617 328-9315
Web: www.sar.com

PROJECT

Taunton Wastewater Treatment Facility Improvements Phase 2

Taunton, MA

TITLE

ELECTRICAL SCADA PANEL INTERCONNECTION DIAGRAM

NO.	REVISIONS	DATE

DRAWN BY:	RB
DESIGNED BY:	MC
CHECKED BY:	MC
ISSUE DATE:	10/16/2020
BETA JOB NO.:	6050

SCALE

UNLESS OTHERWISE NOTED OR CHANGED BY REPRODUCTION

For Review Only

SHEET NO. E-0.11

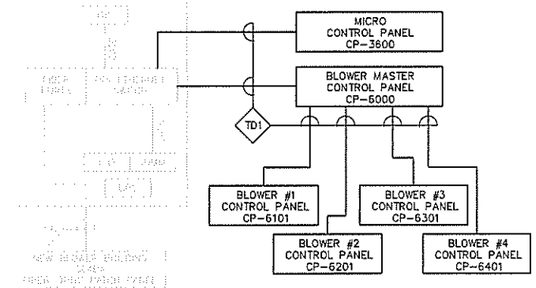

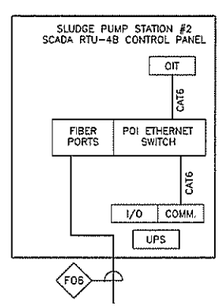

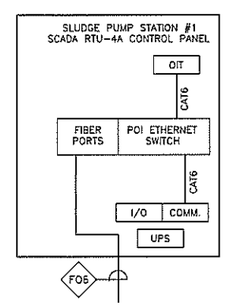

SCADA SYSTEM INTERCONNECTION DIAGRAM

NOT TO SCALE

PREPARED BY

BETA

www.BETA-Inc.com

REGISTERED PROFESSIONAL

SUBCONSULTANT

SAR ENGINEERING, INC.

Mechanical/Electrical Engineers
150 Grossman Drive, Suite 309
Braintree, Massachusetts 02184
617 338-9315
web: www.sar.com

PROJECT

Taunton Wastewater Treatment Facility Improvements Phase 2

Taunton, MA

TITLE

ELECTRICAL SCADA PANEL INTERCONNECTION DIAGRAM

NO.	REVISIONS	DATE

DRAWN BY:	RB
DESIGNED BY:	MC
CHECKED BY:	MC
ISSUE DATE:	10/16/2020
BETA JOB NO.:	6050

SCALE

UNLESS OTHERWISE NOTED OR CHANGED BY REPRODUCTION

For Review Only

SHEET NO. E-0.12

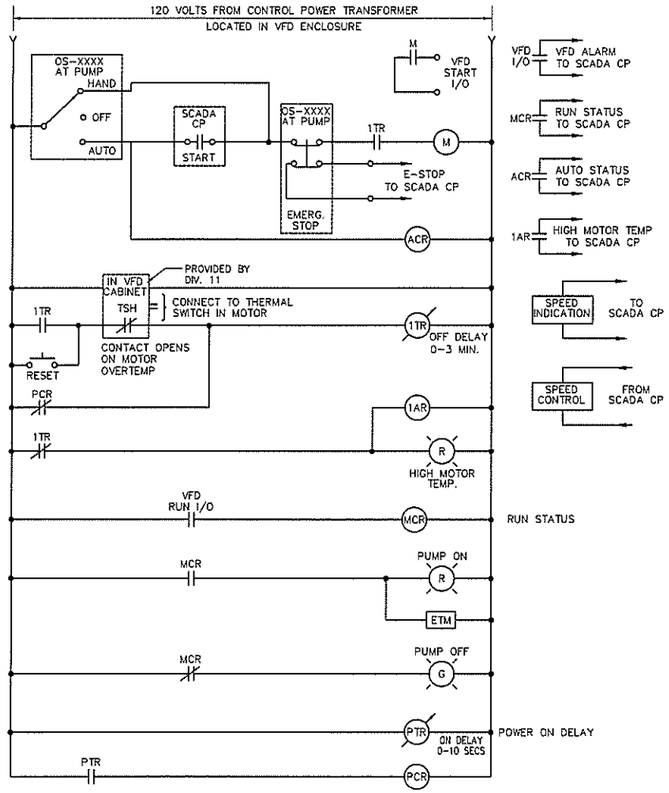

MOTOR CONTROL WIRING DIAGRAM
RETURN, WASTE, AND SCUM/WASTE SLUDGE PUMPS
NOT TO SCALE

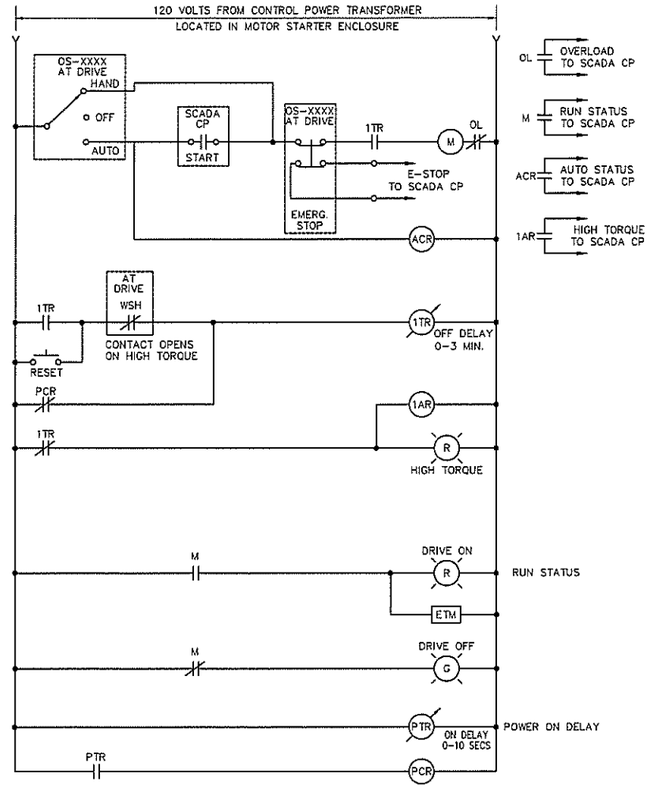

MOTOR CONTROL WIRING DIAGRAM
FINAL CLARIFIER DRIVES
NOT TO SCALE

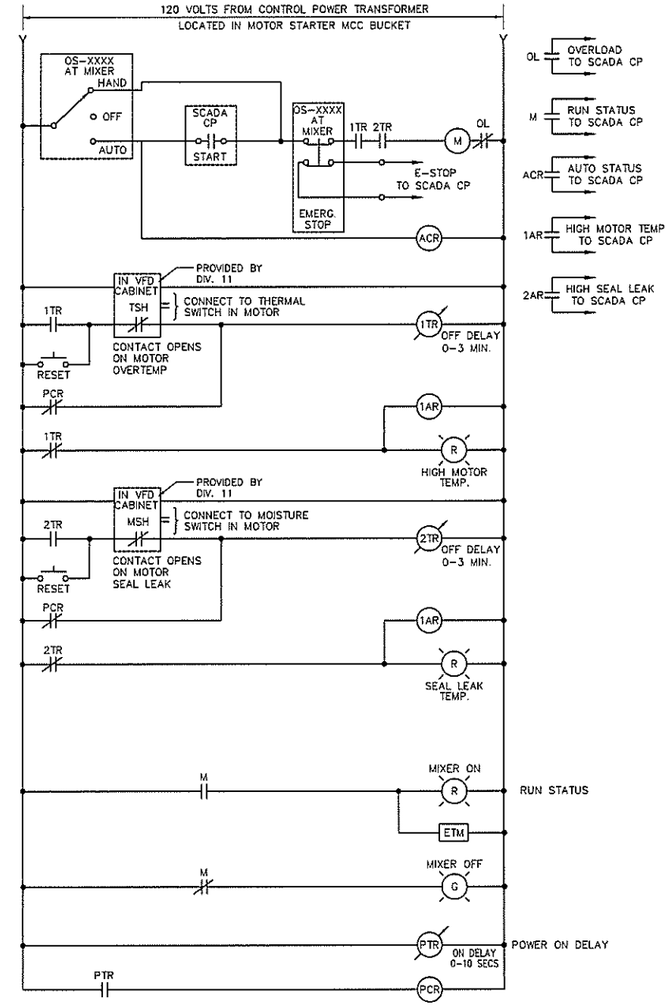

MOTOR CONTROL WIRING DIAGRAM
ANOXIC MIXERS
NOT TO SCALE

PREPARED BY

BETA
www.BETA-Inc.com

REGISTERED PROFESSIONAL

SUBCONSULTANT

SAR ENGINEERING, INC.
Mechanical/Electrical Engineers
150 Grossman Drive, Suite 309
Braintree, Massachusetts 02184
617 328-9215
web: www.sar.com

PROJECT

Taunton Wastewater Treatment Facility Improvements Phase 2

Taunton, MA

TITLE

ELECTRICAL MOTOR CONTROL WIRING DIAGRAMS

NO.	REVISIONS	DATE

DRAWN BY:	RB
DESIGNED BY:	MC
CHECKED BY:	MC
ISSUE DATE:	10/16/2020
BETA JOB NO.:	5050

SCALE

UNLESS OTHERWISE NOTED OR CHANGED BY REPRODUCTION

For Review Only

SHEET NO. E-0.13

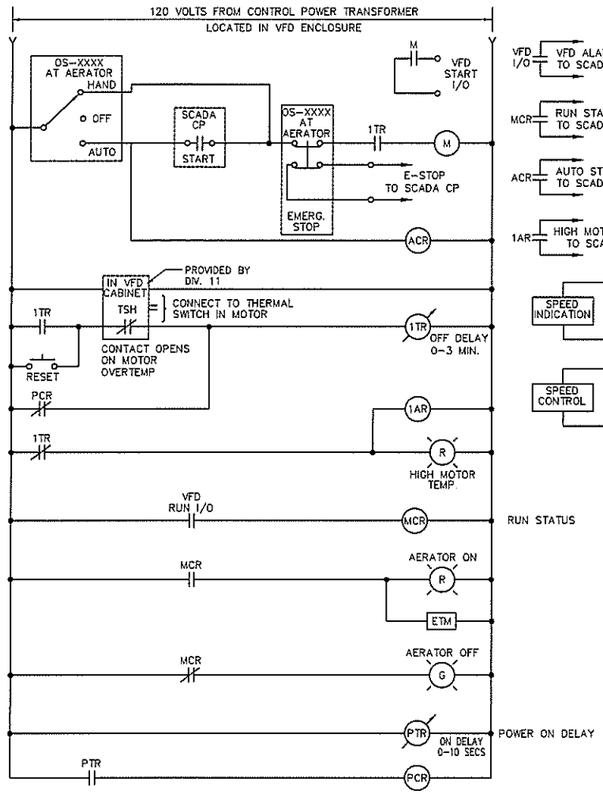

MOTOR CONTROL WIRING DIAGRAM
SURFACE AERATOR
NOT TO SCALE

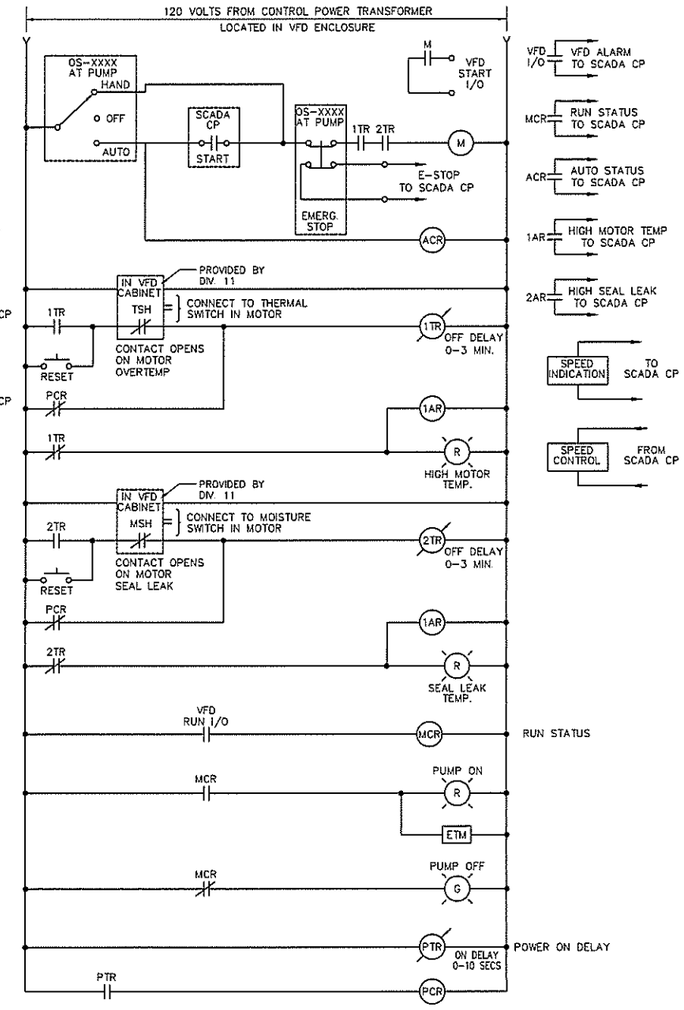

MOTOR CONTROL WIRING DIAGRAM
RECYCLE PUMPS
NOT TO SCALE

PREPARED BY

BETA
www.BETA-Inc.com

REGISTERED PROFESSIONAL

SUBCONSULTANT

SAR ENGINEERING, INC.
Mechanical/Electrical Engineers
150 Grossman Drive, Suite 309
Braintree, Massachusetts 02184
617 338-9215
web: www.sar.com

PROJECT

Taunton Wastewater Treatment Facility Improvements Phase 2

Taunton, MA

TITLE

ELECTRICAL MOTOR CONTROL WIRING DIAGRAMS

NO.	REVISIONS	DATE

DRAWN BY:	RB
DESIGNED BY:	MC
CHECKED BY:	MC
ISSUE DATE:	10/16/2020
BETA JOB NO.:	6050

SCALE

UNLESS OTHERWISE NOTED OR CHANGED BY REPRODUCTION

For Review Only

SHEET NO. E-0.14

DUCT / CABLE SCHEDULE

DUCT NO.	SIZE	CONDUCTORS	FROM	TO
D1	1"	(6) #10, (2) #10 GND	VFD-3161, VFD-3162	IRP-3161, IRP-3162
D2	1"	(3) #12, (3) #10, #10 GND, #12 GND	MC-3101, MC-3151	ASM-3101, ASM-3151
D3	1"	(9) #12, (3) #12 GND	MC-3112, MC-3113, 6DP1	ASM-3112, ASM-3113, TRAIN #1 & TRAIN #2 SLIDE GATES
D4	1"	(4) #10, #10 GND	6LP1	TRAIN #1 AERATION VALVES
D5	1"	(6) #12, #12 GND	6LP1	TRAIN #1 ANALYZERS, FLOW METERS, BIOLOGICAL TANKS LIGHTS
D6	2"	(30) #14	VFD-3161, VFD-3162	IRP-3161, IRP-3162
D7	2"	(60) #14	MC-3101, MC-3151, MC-3112, MC-3113	ASM-3101, ASM-3151, ASM-3112, ASM-3113
D8	1"	(12) #14	RTU-3	TRAIN #1 & TRAIN #2 SLIDE GATES
D9	3"	(25) #16 TSP	RTU-3 & CP-6000	TRAIN #1 AERATION VALVES, FLOW METERS, ANALYZERS
D10	3"	PULL STRING	STUB UP AND CAP NEXT RTU-3	STUB UP AND CAP AT TRAIN #1 TANK
D11	1"	(6) #10, (2) #10 GND	VFD-3261, VFD-3262	IRP-3261, IRP-3262
D12	1"	(3) #12, (3) #10, #10 GND, #12 GND	MC-3213, MC-3251	ASM-3213, ASM-3251
D13	1"	(9) #12, (3) #12 GND	MC-3111, MC-3211, MC-3212	ASM-3111, ASM-3211, ASM-3212
D14	1"	(4) #10, #10 GND	6LP1	TRAIN #2 AERATION VALVES
D15	1"	(6) #12, #12 GND	6LP1	TRAIN #2 ANALYZERS, FLOW METERS, BIOLOGICAL TANKS RECEPTACLES
D16	1"	(30) #14	VFD-3261, VFD-3262	IRP-3261, IRP-3262
D17	2"	(70) #14	MC-3213, MC-3251, MC-3111, MC-3211, MC-3212	ASM-3213, ASM-3251, ASM-3111, ASM-3211, ASM-3212
D18	2"	(40) #14	RTU-3	MICRO-C PUMPS
D19	3"	(30) #16 TSP	RTU-3 & CP-6000	TRAIN #1 AERATION VALVES, FLOW METERS, ANALYZERS
D20	1"	(6) #12, #12 GND	6LP1	MICRO-C PUMPS, MICRO-C LEVEL TRANSMITTERS

DUCT / CABLE SCHEDULE

DUCT NO.	SIZE	CONDUCTORS	FROM	TO
D21	1"	(6) #12, (2) #12 GND	MC-3131, MC-3132	ASM-3131, ASM-3132
D22	1"	(9) #12, (3) #12 GND	MC-3231, MC-3232, 6DP1	ASM-3231, ASM-3232, SEC. ANOXIC TANKS SLIDE GATES
D23	1"	(6) #12, #12 GND	6LP1	SEC. ANOXIC TANK ANALYZERS, LIGHTS, RECEPTACLES
D24	2"	(60) #14	MC-3131, MC-3132, MC-3231, MC-3231	ASM-3101, ASM-3151, ASM-3112, ASM-3113
D25	1"	(12) #14	RTU-3	SEC. ANOXIC TANKS SLIDE GATES
D26	2"	(6) #16 TSP	RTU-3	SEC. ANOXIC TANK ANALYZERS
D27	2"	PULL STRING	STUB UP AND CAP NEXT RTU-3	STUB UP AND CAP AT SEC. ANOXIC TANK
D28	2"	(6) #6, (2) #10 GND	VFD-3141, VFD-3142	MSA-3141, MSA-3142
D29	2"	(6) #6, (2) #10 GND	VFD-3143, VFD-3243	MSA-3143, MSA-3243
D30	2"	(6) #6, (2) #10 GND	VFD-3241, VFD-3242	MSA-3241, MSA-3242
D31	1"	(3) #12, #12 GND	6DP1	RE-AERATION TANK SLIDE GATES
D32	1"	(6) #12, #12 GND	6LP1	RE-AERATION TANK ANALYZERS, LIGHTS, RECEPTACLES
D33	2"	(80) #14	VFD-3141, VFD-3142, VFD-3143, VFD-3243, VFD-3241, VFD-3242	MSA-3141, MSA-3142, MSA-3143, MSA-3243, MSA-3241, MSA-3242
D34	1"	(20) #14	RTU-3	RE-AERATION TANK SLIDE GATES
D35	2"	(4) #16 TSP	RTU-3	RE-AERATION TANK ANALYZERS
D36	2"	PULL STRING	STUB UP AND CAP NEXT RTU-3	STUB UP AND CAP AT SEC. ANOXIC TANK
D37	1"	(6) #12, (2) #12 GND	DIESEL TANK PUMP CONTROL PANEL	DIESEL STORAGE TANK PUMPS
D38	1"	PULL STRING	DIESEL TANK GAUGE LEAK DETECTION STATION PANEL	STUB UP AND CAP AT SEC. ANOXIC TANK
D39	1"	PULL STRING	DIESEL TANK GAUGE LEAK DETECTION STATION PANEL	STUB UP AND CAP AT SEC. ANOXIC TANK

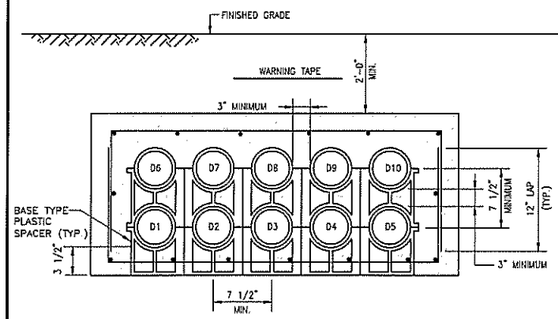

SECTION R-R

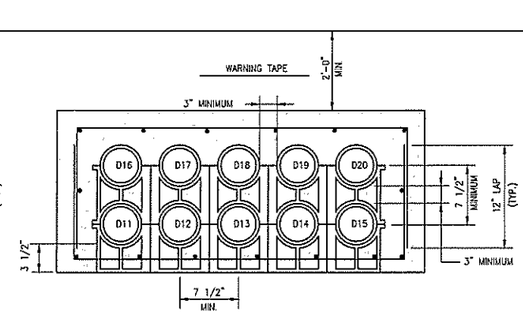

SECTION S-S

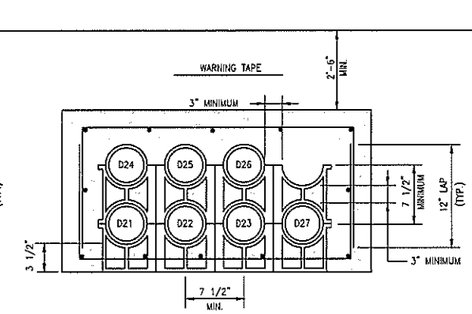

SECTION T-T

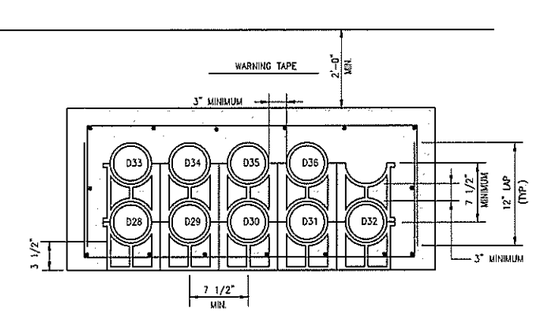

SECTION U-U

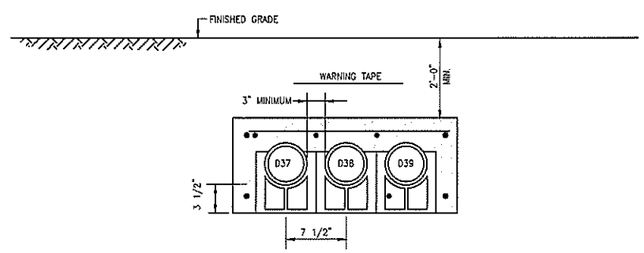

SECTION V-V

NOTES:

1. BACKFILL DUCT BANK IN LAYERS AND MANUALLY TAMP OR "PUDDLE" CONCRETE FILL. PROVIDE RED DUCT BANK MARKER TAPES, READING "CAUTION – ELECTRICAL LINES BELOW", OVER ENTIRE LENGTH OF DUCTLINE. LOCATE TAPES 12 INCHES BELOW GRADE. PROVIDE A TAPE FOR EVERY 12 INCHES OF WIDTH OF DUCTLINE.
2. A MINIMUM OF 12" SEPARATION SHALL BE KEPT BETWEEN DUCT BANK SECTIONS WITHIN SAME TRENCH.
3. A MINIMUM 3" OF CONCRETE SHALL KEPT BETWEEN CONDUITS AND THE PERIMETER OF ALL DUCTBANKS

DUCTBANK SECTIONS
NO SCALE

PREPARED BY

BETA
www.BETA-Inc.com

REGISTERED PROFESSIONAL

SUBCONSULTANT

SAR ENGINEERING, INC.
Mechanical/Electrical Engineers
150 Grossman Drive, Suite 309
Braintree, Massachusetts 02184
617 328-3315
web: www.sar.com

PROJECT

Taunton Wastewater Treatment Facility Improvements Phase 2

Taunton, MA

TITLE

ELECTRICAL DUCTBANK SECTIONS

NO.	REVISIONS	DATE

DRAWN BY:	RB
DESIGNED BY:	MC
CHECKED BY:	MC
ISSUE DATE:	10/16/2020
BETA JOB NO.:	6050

SCALE

UNLESS OTHERWISE NOTED OR CHANGED BY REPRODUCTION

For Review Only

SHEET NO. E-0.15

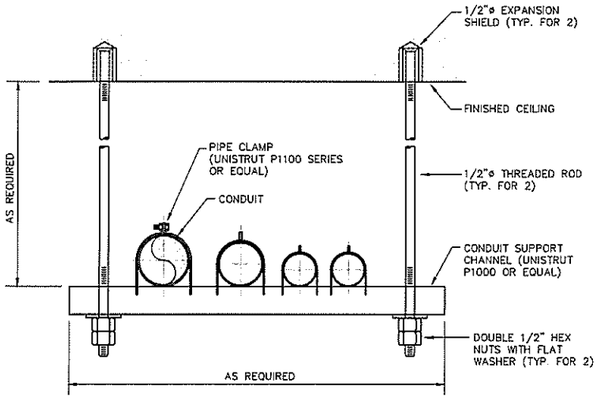

TYPICAL CONDUIT CEILING SUPPORT

NOT TO SCALE

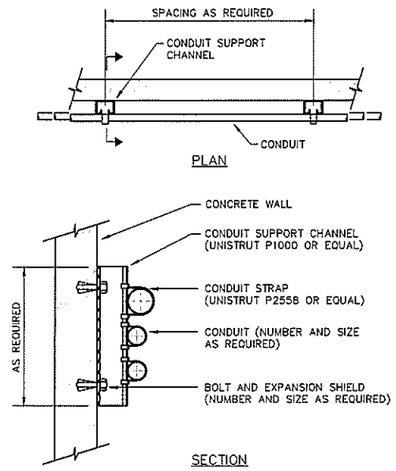

TYPICAL CONDUIT WALL SUPPORT

NOT TO SCALE

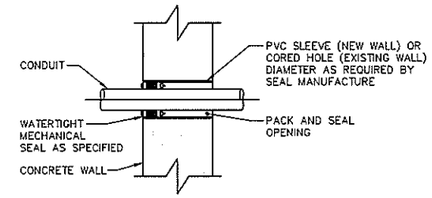

CONDUIT PENETRATION THROUGH NEW & EXISTING CONCRETE WALL

NOT TO SCALE

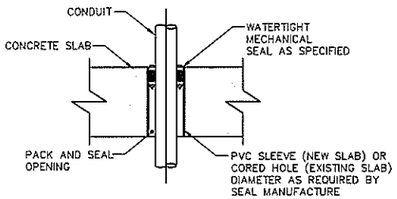

CONDUIT PENETRATION PASSING THROUGH NEW & EXISTING CONCRETE SLAB

NOT TO SCALE

GENERAL NOTES:

1. ALL MOUNTING BRACKETS, SUPPORTS, FASTENERS, AND ECT. WITHIN THE WET WELL SHALL BE STAINLESS STEEL

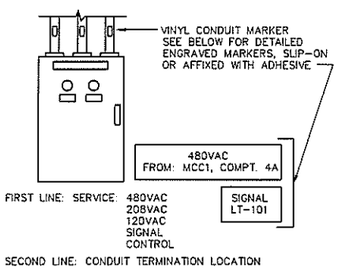

CONDUIT MARKER DETAIL

NOT TO SCALE

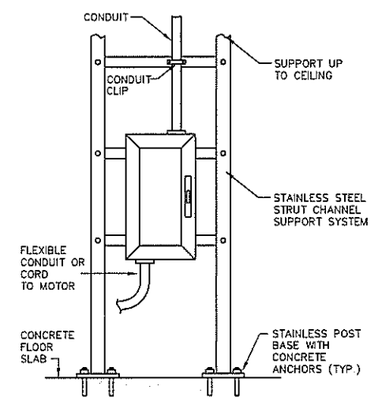

ELECTRICAL EQUIPMENT STANCHION MOUNTING DETAIL

NOT TO SCALE

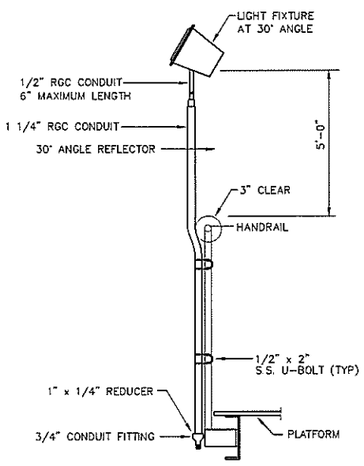

LIGHT FIXTURE AT CLARIFIERS RAIL MOUNTING DETAIL

NOT TO SCALE

POWER DUCT / CABLE SCHEDULE

DUCT NO.	SIZE	CONDUCTORS	FROM	TO
DP12	EXIST. 3"	(4) 1/0, #6 GND	SLUDGE PUMPING STATION #1	EXISTING BLOWER BUILDING

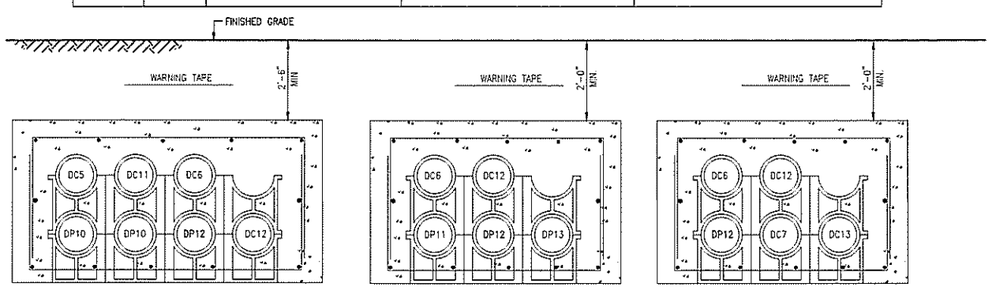

SECTION I-I

SECTION J-J

SECTION K-K

EXISTING DUCTBANK SECTIONS

NO SCALE

PREPARED BY

BETA

www.BETA-Inc.com

REGISTERED PROFESSIONAL

SUBCONSULTANT

SAR ENGINEERING, INC.

Mechanical/Electrical Engineers
150 Grossman Drive, Suite 309
Braintree, Massachusetts 02184
617 338-0115
web: www.sar.com

PROJECT

Taunton Wastewater Treatment Facility Improvements Phase 2

Taunton, MA

TITLE

ELECTRICAL DETAILS & EXISTING DUCTBANK SECTIONS

NO.	REVISIONS	DATE

DRAWN BY:	RB
DESIGNED BY:	MC
CHECKED BY:	MC
ISSUE DATE:	10/16/2020
BETA JOB NO.:	6050

SCALE

UNLESS OTHERWISE NOTED OR CHANGED BY REPRODUCTION

For Review Only

SHEET NO. E-0.16

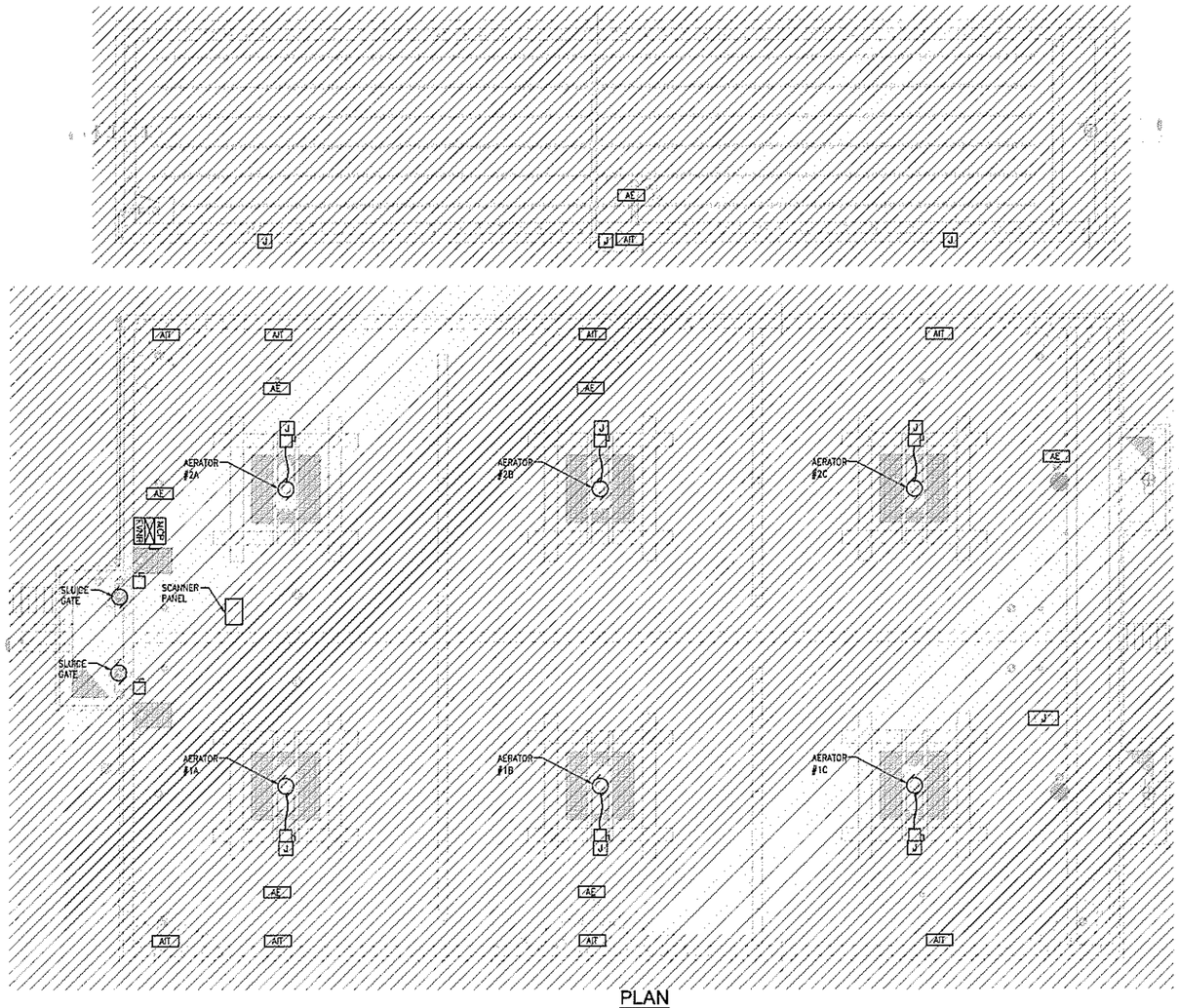

PLAN
SCALE: 1/8"= 1'-0"

PREPARED BY

BETA
www.BETA-Inc.com

REGISTERED PROFESSIONAL

SUBCONSULTANT

SAR ENGINEERING, INC.
Mechanical/Electrical Engineers
150 Grossman Drive, Suite 309
Braintree, Massachusetts 02184
617 328-9315
web: www.sar.com

PROJECT

Taunton Wastewater Treatment Facility Improvements Phase 2

Taunton, MA

TITLE

Electrical Demolition Aeration Tanks No. 1, 2, & 3 Plan

NO.	REVISIONS	DATE

DRAWN BY:	RLB
DESIGNED BY:	MC
CHECKED BY:	MC
ISSUE DATE:	10/16/2020
BETA JOB NO.:	6050

SCALE

AS SHOWN

UNLESS OTHERWISE NOTED OR CHANGED BY REPRODUCTION

For Review Only

SHEET NO.

E-3.1

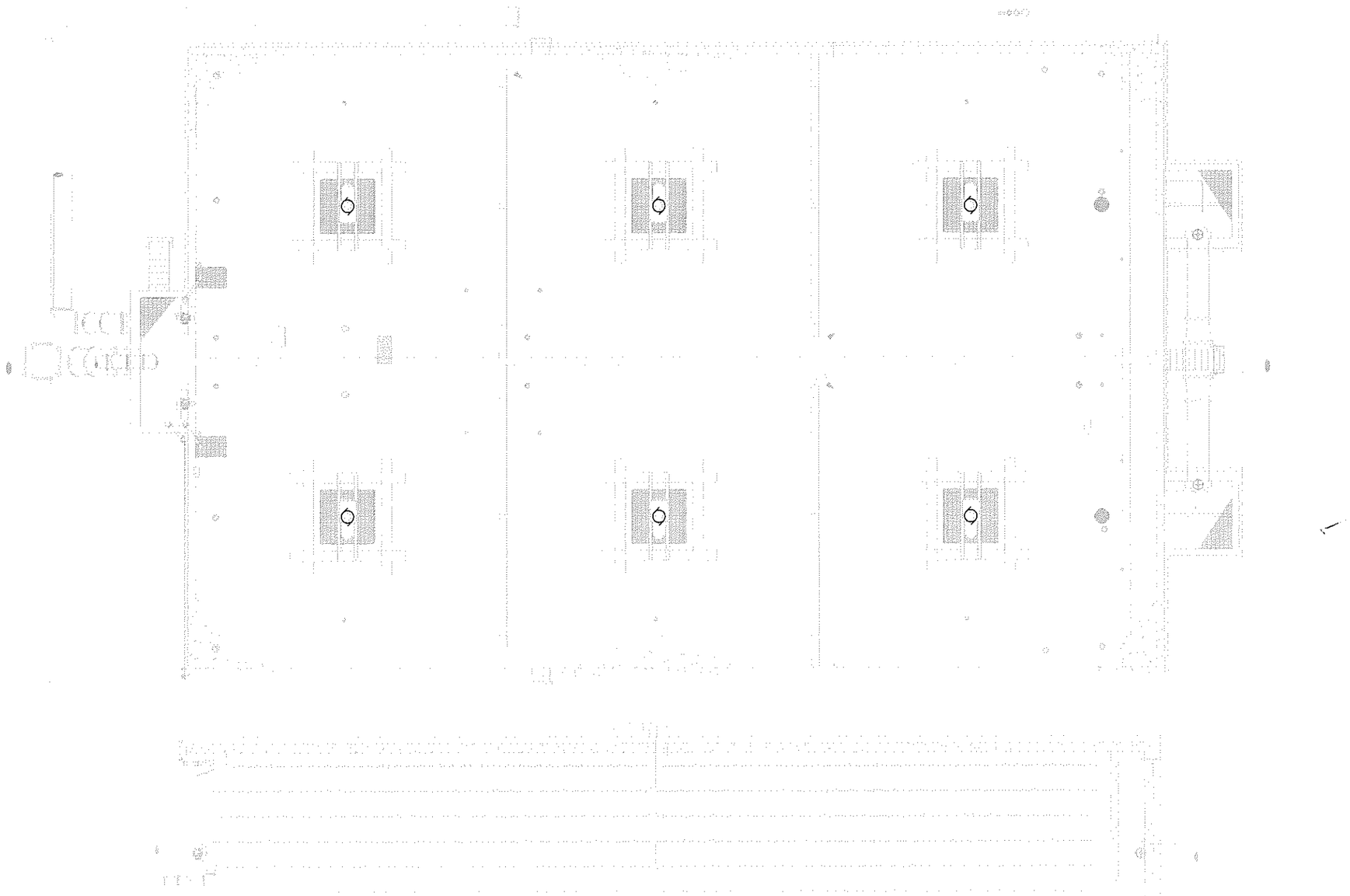

PLAN
SCALE: 1/8"= 1'-0"

PREPARED BY

BETA
www.BETA-Inc.com

REGISTERED PROFESSIONAL

SUBCONSULTANT

SAR ENGINEERING, INC.
Mechanical/Electrical Engineers
150 Grossman Drive, Suite 309
Braintree, Massachusetts 02184
617 328-9315
web: www.sar.com

PROJECT

Taunton Wastewater Treatment Facility Improvements Phase 2

Taunton, MA

TITLE

Electrical Demolition Aeration Tanks No. 4, 5, & 6 Plan

NO.	REVISIONS	DATE

DRAWN BY:	RLB
DESIGNED BY:	MC
CHECKED BY:	MC
ISSUE DATE:	10/16/2020
BETA JOB NO.:	6050

SCALE

AS SHOWN

UNLESS OTHERWISE NOTED OR CHANGED BY REPRODUCTION

For Review Only

SHEET NO.

E-3.2

NOTES:

1. PROVIDE SEPARATE PULL BOXES ON THE SIDE OF TANK FOR POWER WIRING, SIGNAL WIRING, AND CONTROL WIRING FOR INTERFACE TO DUCTBANK.

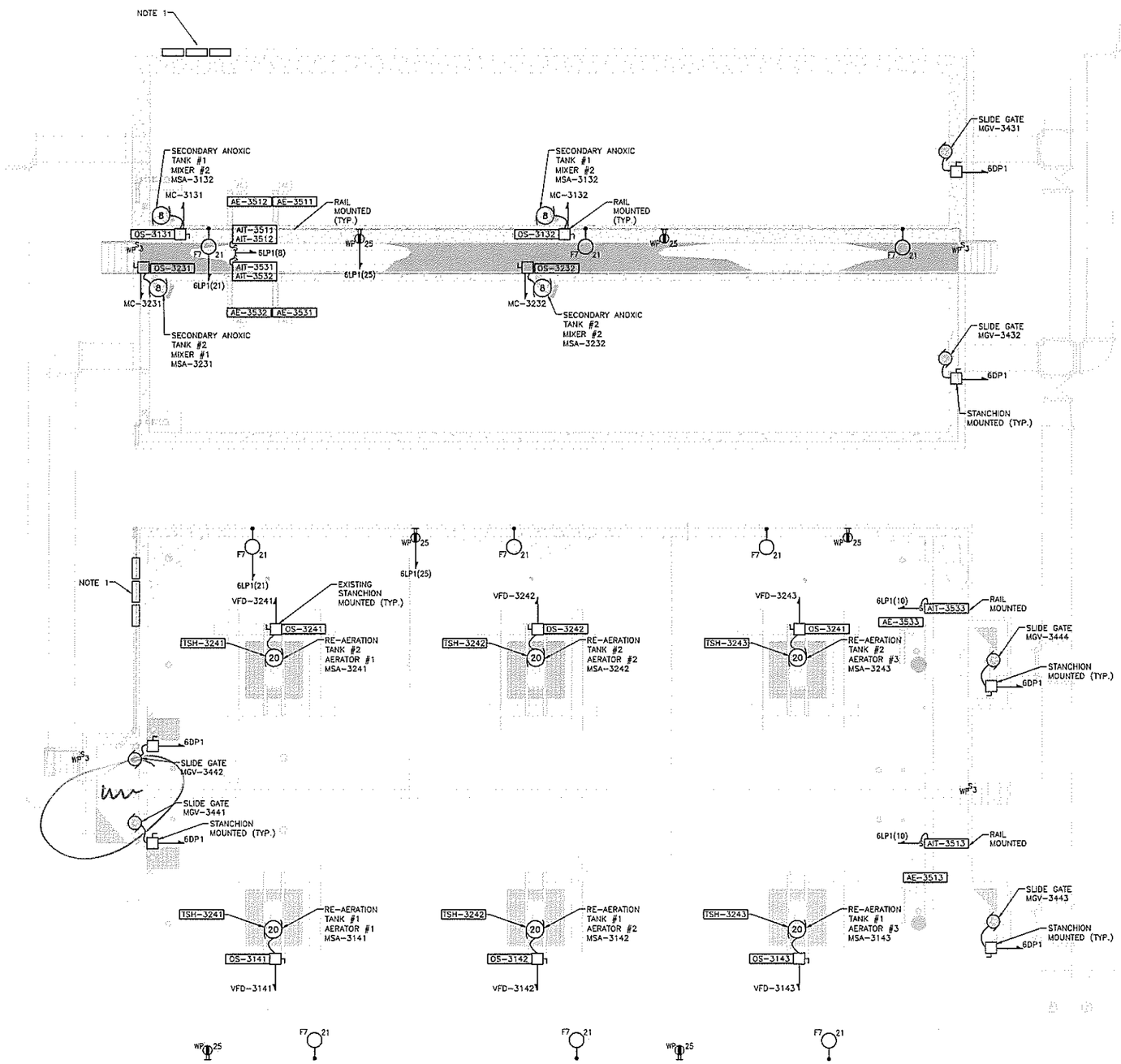

PLAN
SCALE: 1/8"= 1'-0"

PREPARED BY

BETA
www.BETA-Inc.com

REGISTERED PROFESSIONAL

SUBCONSULTANT

SAR ENGINEERING, INC.
Mechanical/Electrical Engineers
150 Grossman Drive, Suite 309
Braintree, Massachusetts 02184
617 328-9215
Web: www.sar.com

PROJECT

Taunton Wastewater Treatment Facility Improvements Phase 2

Taunton, MA

TITLE

Electrical Secondary Anoxic & Re-Aeration Tanks No.1 & 2 Plans

NO.	REVISIONS	DATE

DRAWN BY:	RLB
DESIGNED BY:	MC
CHECKED BY:	MC
ISSUE DATE:	10/16/2020
BETA JOB NO.:	5050

SCALE

AS SHOWN

UNLESS OTHERWISE NOTED OR CHANGED BY REPRODUCTION

For Review Only

SHEET NO.

E-3.3

NOTES:

1. PROVIDE SEPARATE PULL BOXES ON THE SIDE OF TANK FOR POWER WIRING, SIGNAL WIRING, AND CONTROL WIRING FOR INTERFACE TO DUCTBANK.

ADD MBV 3277 FIT 3275

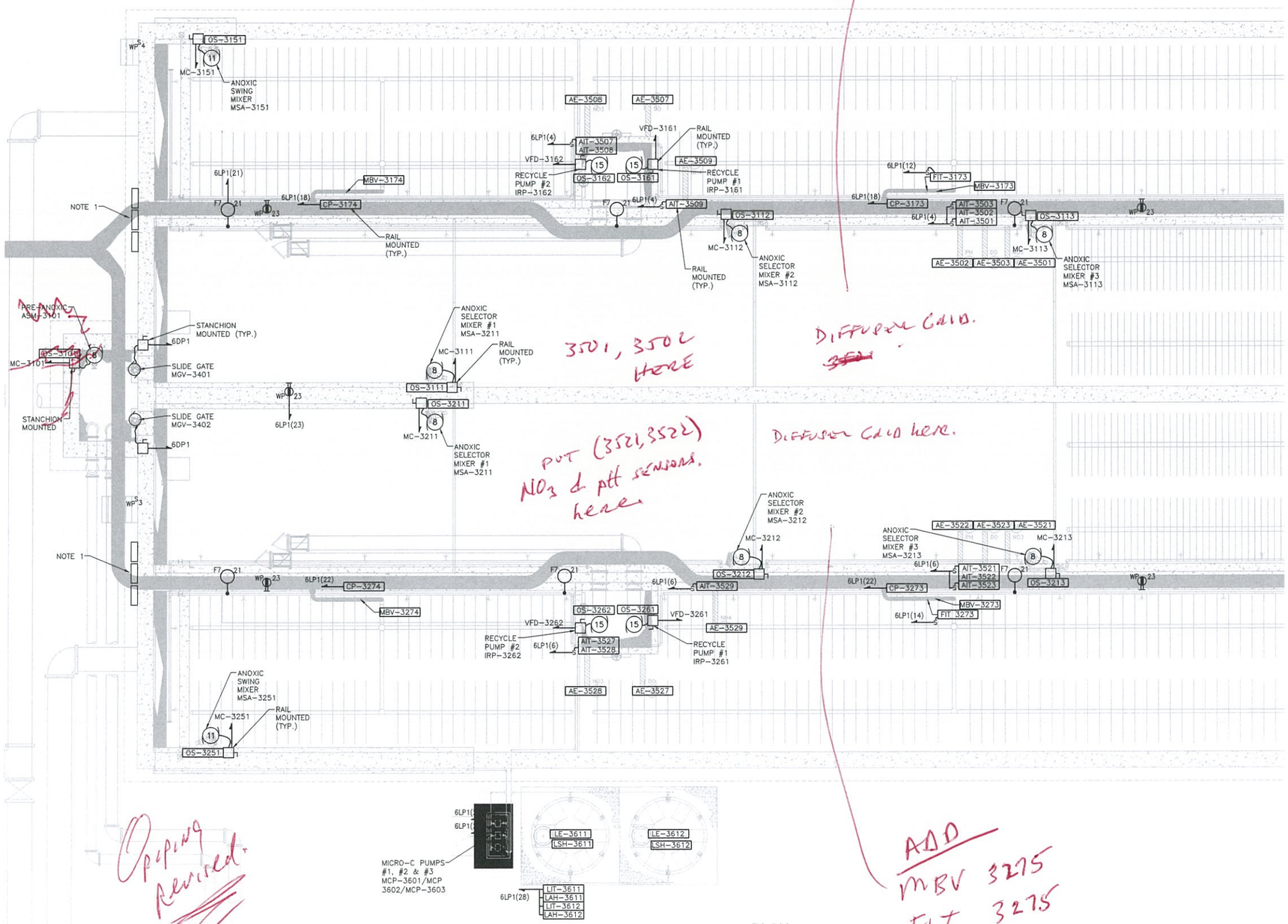

PLAN
SCALE: 1/8"= 1'-0"

PREPARED BY

BETA
www.BETA-Inc.com

REGISTERED PROFESSIONAL

SUBCONSULTANT

SAR ENGINEERING, INC.
Mechanical/Electrical Engineers
150 Grossman Drive, Suite 309
Braintree, Massachusetts 02184
617 328-9215
web: www.sar.com

PROJECT

Taunton Wastewater Treatment Facility Improvements Phase 2

Taunton, MA

TITLE

Electrical
Biological Treatment
Reactor
Part Plan I

NO.	REVISIONS	DATE

DRAWN BY:	RLB
DESIGNED BY:	MC
CHECKED BY:	MC
ISSUE DATE:	10/16/2020
BETA JOB NO.:	6050

SCALE

AS SHOWN

UNLESS OTHERWISE NOTED OR CHANGED BY REPRODUCTION

For Review Only

SHEET NO.

E-3.4

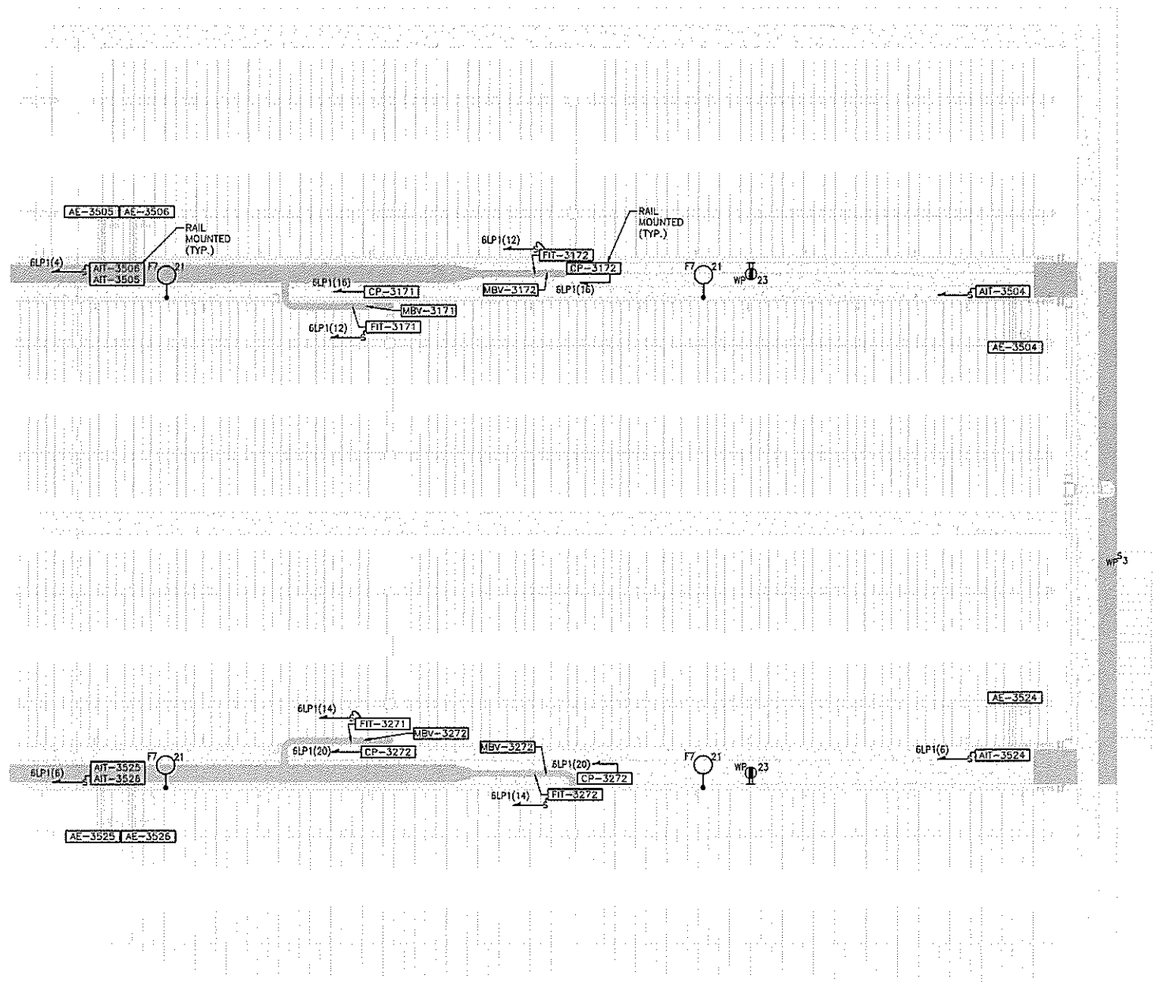

PLAN
SCALE: 1/8"= 1'-0"

PREPARED BY

BETA
www.BETA-Inc.com

REGISTERED PROFESSIONAL

SUBCONSULTANT

SAR ENGINEERING, INC.
Mechanical/Electrical Engineers
150 Grossman Drive, Suite 309
Braintree, Massachusetts 02184
617 338-9115
web: www.sar.com

PROJECT

Taunton Wastewater Treatment Facility Improvements Phase 2

Taunton, MA

TITLE

Electrical
Biological Treatment Reactor
Part Plan II

NO.	REVISIONS	DATE

DRAWN BY:	RLB
DESIGNED BY:	MC
CHECKED BY:	MC
ISSUE DATE:	10/16/2020
BETA JOB NO.:	6050

SCALE

AS SHOWN

UNLESS OTHERWISE NOTED OR CHANGED BY REPRODUCTION

For Review Only

SHEET NO.

E-3.5

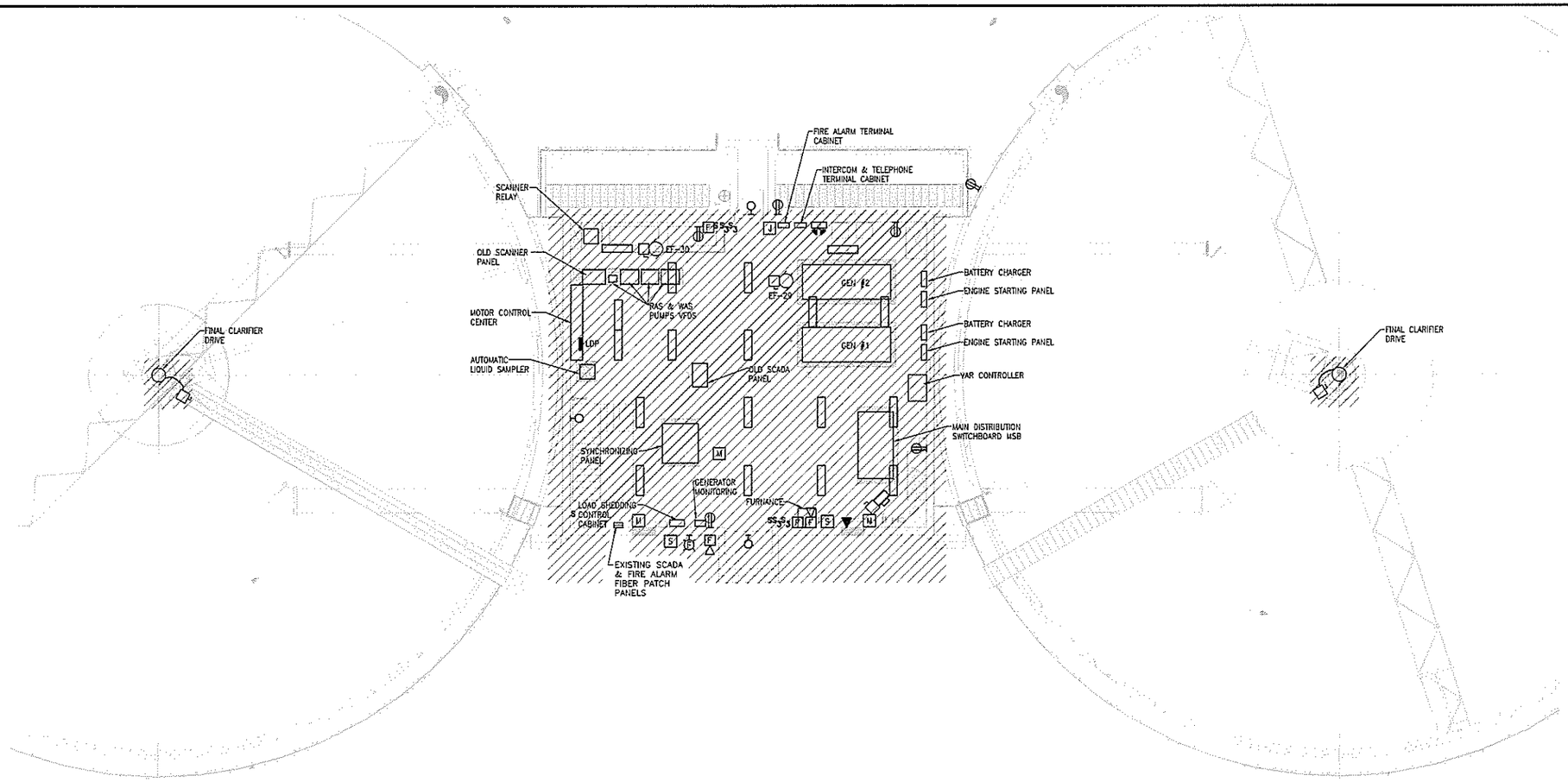

UPPER LEVEL PLAN

SCALE: 1/8"= 1'-0"

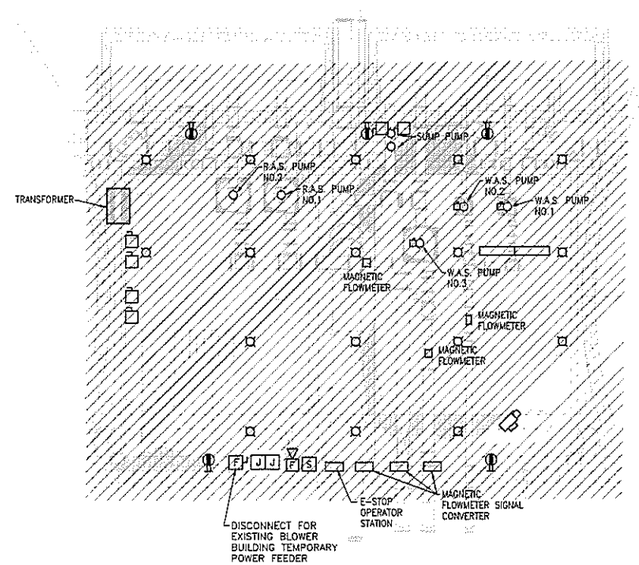

LOWER LEVEL PLAN

SCALE: 1/8"= 1'-0"

PREPARED BY

BETA
www.BETA-Inc.com

REGISTERED PROFESSIONAL

NOT FOR CONSTRUCTION (CONCEPTUAL)

SUBCONSULTANT

SAR ENGINEERING, INC.
Mechanical/Electrical Engineers
150 Grossman Drive, Suite 309
Braintree, Massachusetts 02184
617 328-9215
web: www.sar.com

PROJECT

Taunton Wastewater Treatment Facility Improvements Phase 2

Taunton, MA

TITLE

Electrical Demolition Final Clarifiers No. 1 & 2 Plan & Sludge Pump Station No.1 Plan

NO.	REVISIONS	DATE

DRAWN BY:	RLB
DESIGNED BY:	MC
CHECKED BY:	MC
ISSUE DATE:	10/16/2020
BETA JOB NO.:	6050

SCALE

AS SHOWN

UNLESS OTHERWISE NOTED OR CHANGED BY REPRODUCTION

For Review Only

SHEET NO.

E-4.1

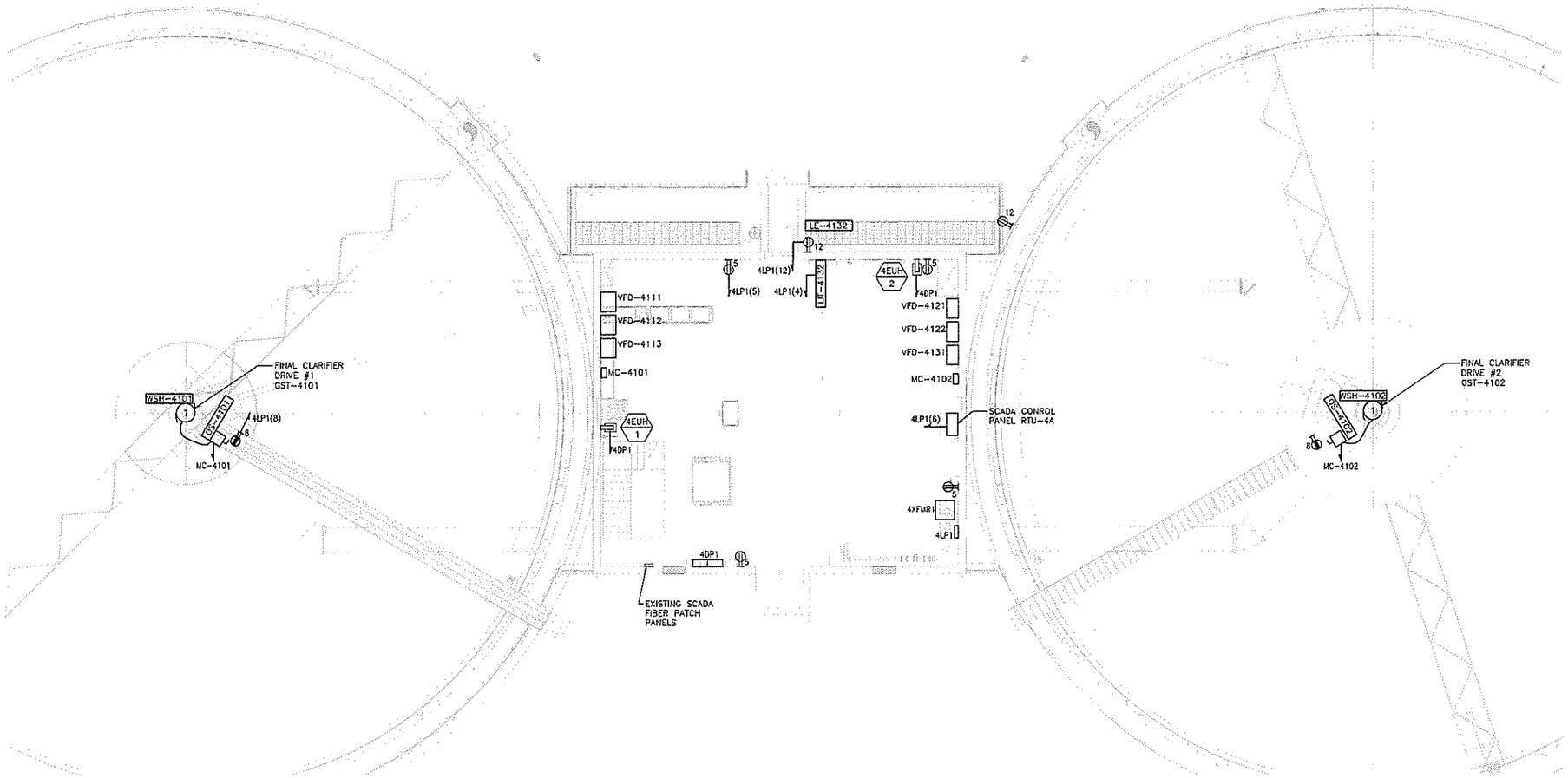

UPPER LEVEL PLAN

SCALE: 1/8"= 1'-0"

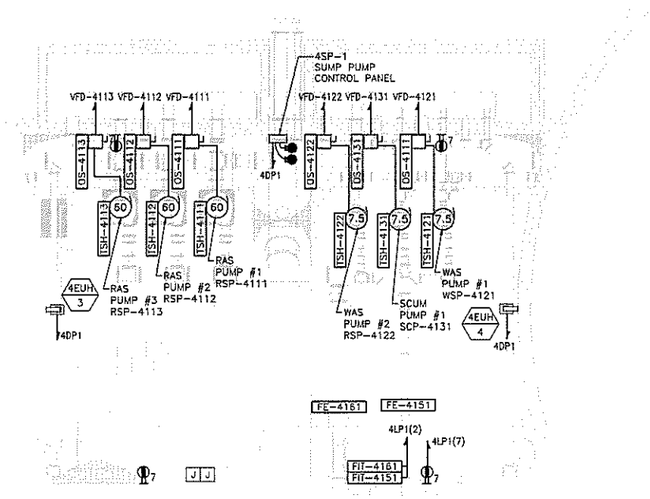

LOWER LEVEL PLAN

SCALE: 1/8"= 1'-0"

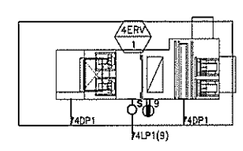

ROOF PLAN

SCALE: 1/8"= 1'-0"

PREPARED BY

BETA

www.BETA-Inc.com

REGISTERED PROFESSIONAL

NOT FOR CONSTRUCTION (CONCEPTUAL)

SUBCONSULTANT

SAR ENGINEERING, INC.

Mechanical/Electrical Engineers
150 Grossman Drive, Suite 309
Braintree, Massachusetts 02184
617 328-9315
web: www.sar.com

PROJECT

Taunton Wastewater Treatment Facility Improvements Phase 2

Taunton, MA

TITLE

Electrical Final Clarifiers No.1 & 2 Plan & Sludge Pump Station No.1 Power Plan

NO.	REVISIONS	DATE

DRAWN BY:	RLB
DESIGNED BY:	MC
CHECKED BY:	MC
ISSUE DATE:	10/16/2020
BETA JOB NO.:	6050

SCALE

AS SHOWN

UNLESS OTHERWISE NOTED OR CHANGED BY REPRODUCTION

For Review Only

SHEET NO.

E-4.2

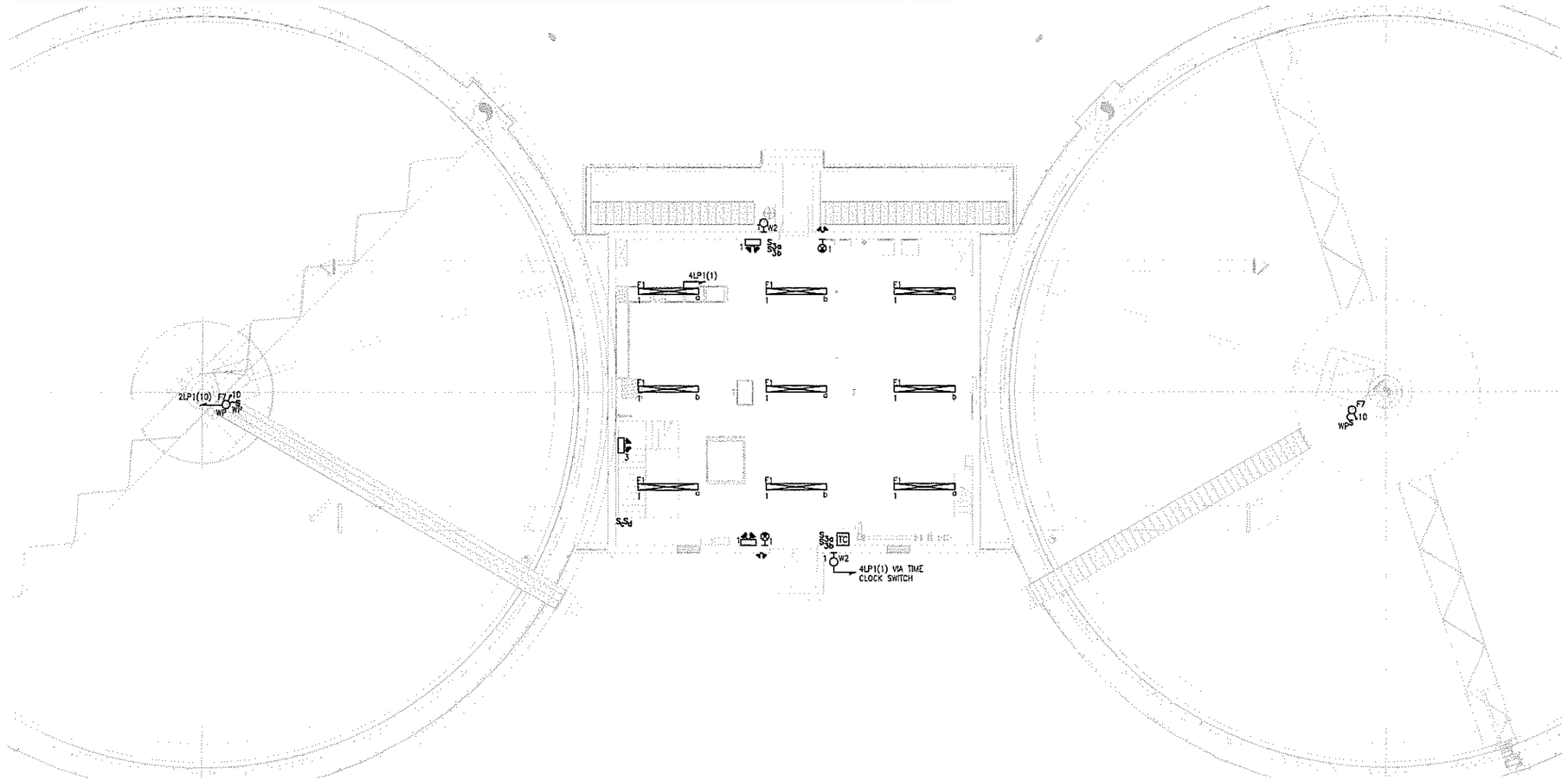

UPPER LEVEL PLAN
SCALE: 1/8"= 1'-0"

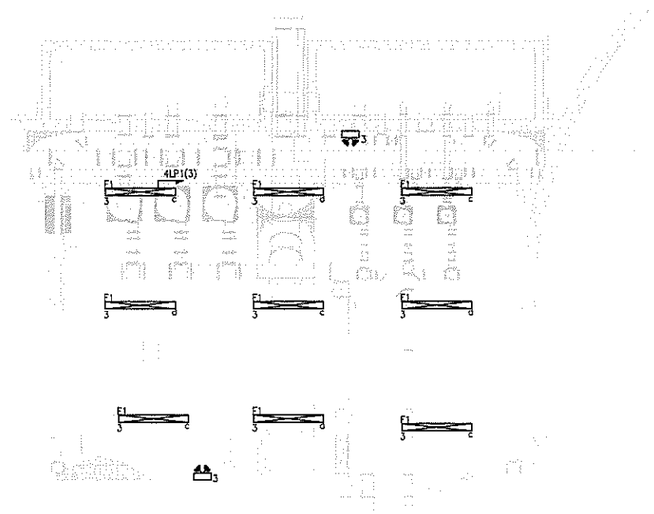

LOWER LEVEL PLAN
SCALE: 1/8"= 1'-0"

PREPARED BY

BETA
www.BETA-Inc.com

REGISTERED PROFESSIONAL

NOT FOR CONSTRUCTION (CONCEPTUAL)

SUBCONSULTANT

SAR ENGINEERING, INC.
Mechanical/Electrical Engineers
150 Grossman Drive, Suite 309
Braintree, Massachusetts 02184
617 328-9315
web: www.sar.com

PROJECT

Taunton Wastewater Treatment Facility Improvements Phase 2

Taunton, MA

TITLE

Electrical Final Clarifiers No. 1 & 2 Plan & Sludge Pump Station No.1 Lighting Plan

NO.	REVISIONS	DATE

DRAWN BY:	RLB
DESIGNED BY:	MC
CHECKED BY:	MC
ISSUE DATE:	10/16/2020
BETA JOB NO.:	6050

SCALE

AS SHOWN

UNLESS OTHERWISE NOTED OR CHANGED BY REPRODUCTION

For Review Only

SHEET NO.

E-4.2

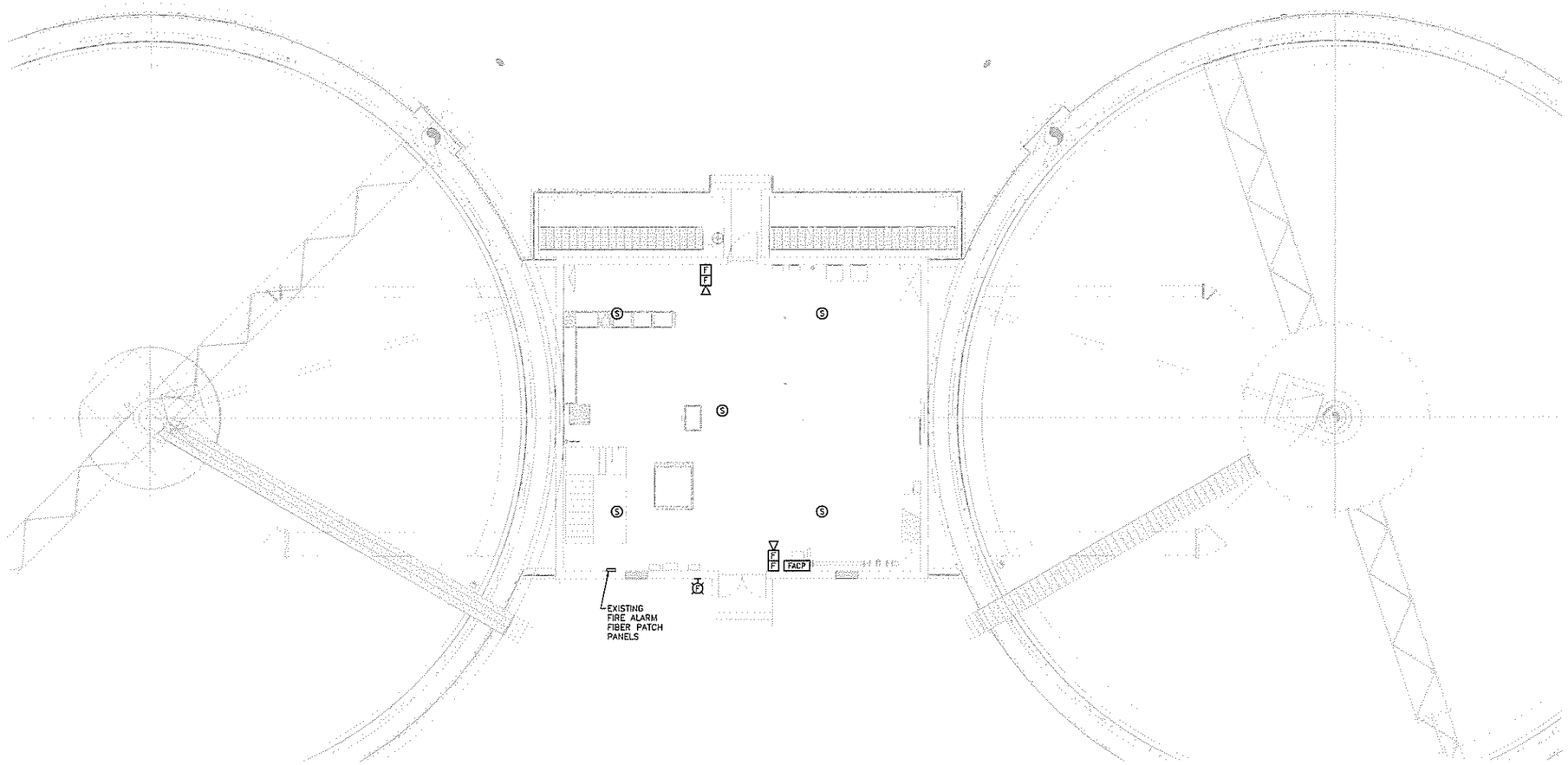

UPPER LEVEL PLAN
SCALE: 1/8"= 1'-0"

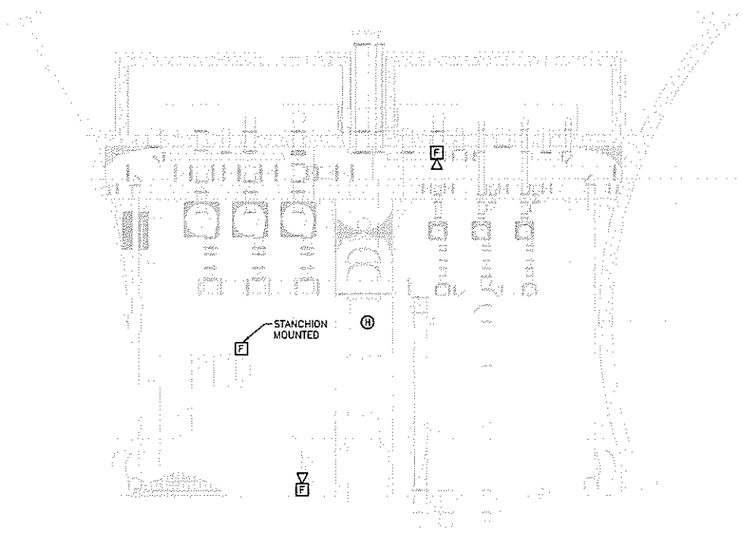

LOWER LEVEL PLAN
SCALE: 1/8"= 1'-0"

PREPARED BY

BETA
www.BETA-Inc.com

REGISTERED PROFESSIONAL

NOT FOR
CONSTRUCTION
(CONCEPTUAL)

SUBCONSULTANT

SAR
ENGINEERING, INC.
Mechanical/Electrical Engineers
150 Grossman Drive, Suite 309
Braintree, Massachusetts 02184
617 328-9315
web: www.sar.com

PROJECT

Taunton Wastewater Treatment Facility Improvements Phase 2

Taunton, MA

TITLE

Electrical Final Clarifiers No. 1 & 2 Plan & Sludge Pump Station No.1 Fire Alarm Plan

NO.	REVISIONS	DATE

DRAWN BY:	RLB
DESIGNED BY:	MC
CHECKED BY:	MC
ISSUE DATE:	10/16/2020
BETA JOB NO.:	6050

SCALE

AS SHOWN

UNLESS OTHERWISE NOTED OR CHANGED BY REPRODUCTION

For Review Only

SHEET NO.

E-4.4

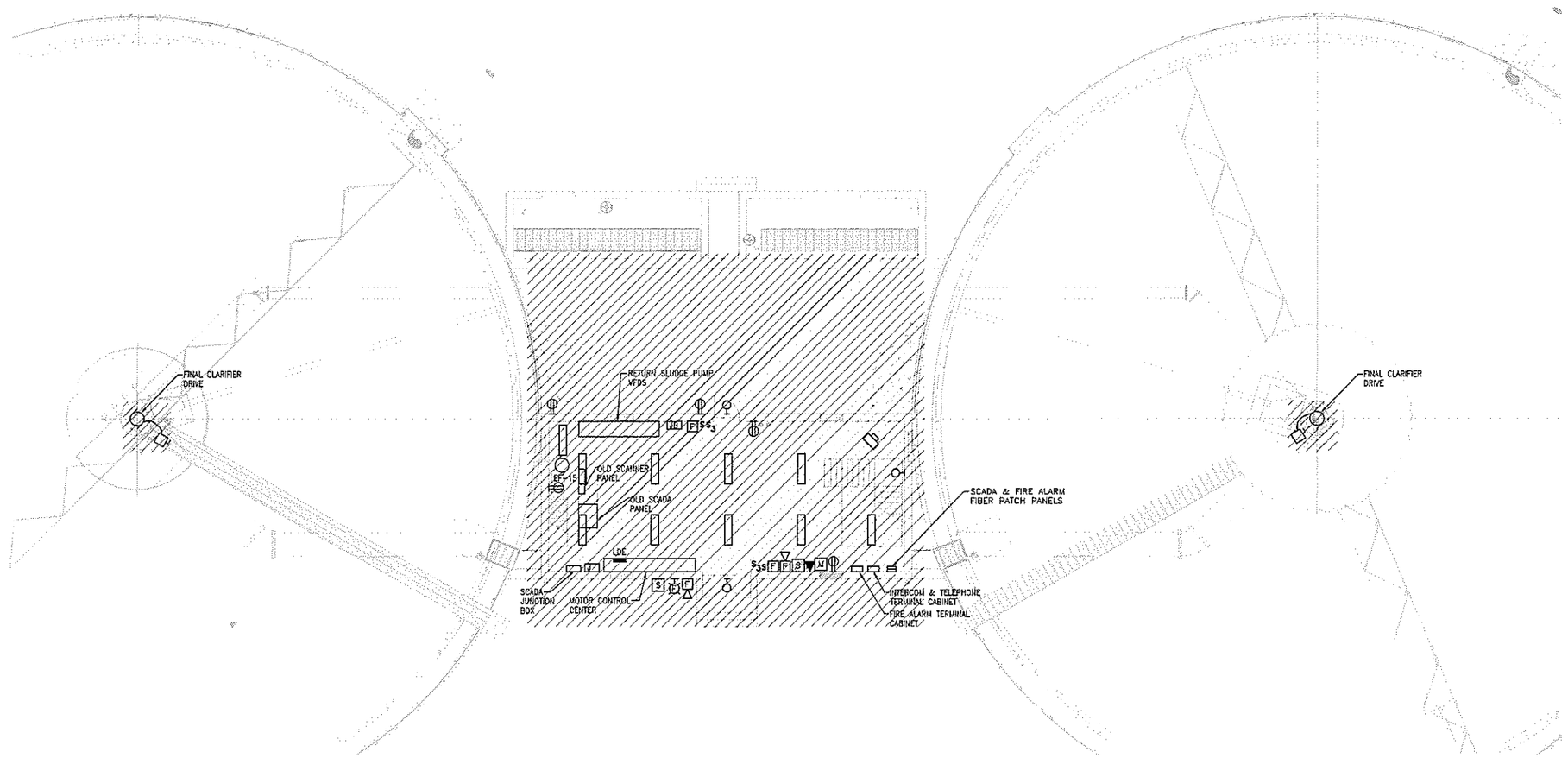

UPPER LEVEL PLAN

SCALE: 1/8"= 1'-0"

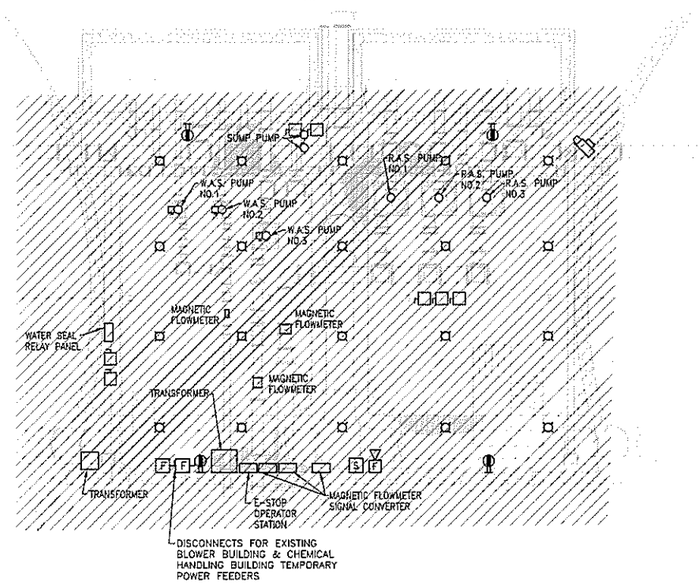

LOWER LEVEL PLAN

SCALE: 1/8"= 1'-0"

PREPARED BY

BETA

www.BETA-Inc.com

REGISTERED PROFESSIONAL

NOT FOR CONSTRUCTION (CONCEPTUAL)

SUBCONSULTANT

SAR ENGINEERING, INC.

Mechanical/Electrical Engineers
150 Grossman Drive, Suite 300
Braintree, Massachusetts 02184
617 328-9315
web: www.sar.com

PROJECT

Taunton Wastewater Treatment Facility Improvements Phase 2

Taunton, MA

TITLE

Electrical Demolition Final Clarifiers No. 3 & 4 Plan & Sludge Pump Station No.2 Plan

NO.	REVISIONS	DATE

DRAWN BY:	RLB
DESIGNED BY:	MC
CHECKED BY:	MC
ISSUE DATE:	10/16/2020
BETA JOB NO.:	6050

SCALE

AS SHOWN

UNLESS OTHERWISE NOTED OR CHANGED BY REPRODUCTION

For Review Only

SHEET NO.

E-4.5

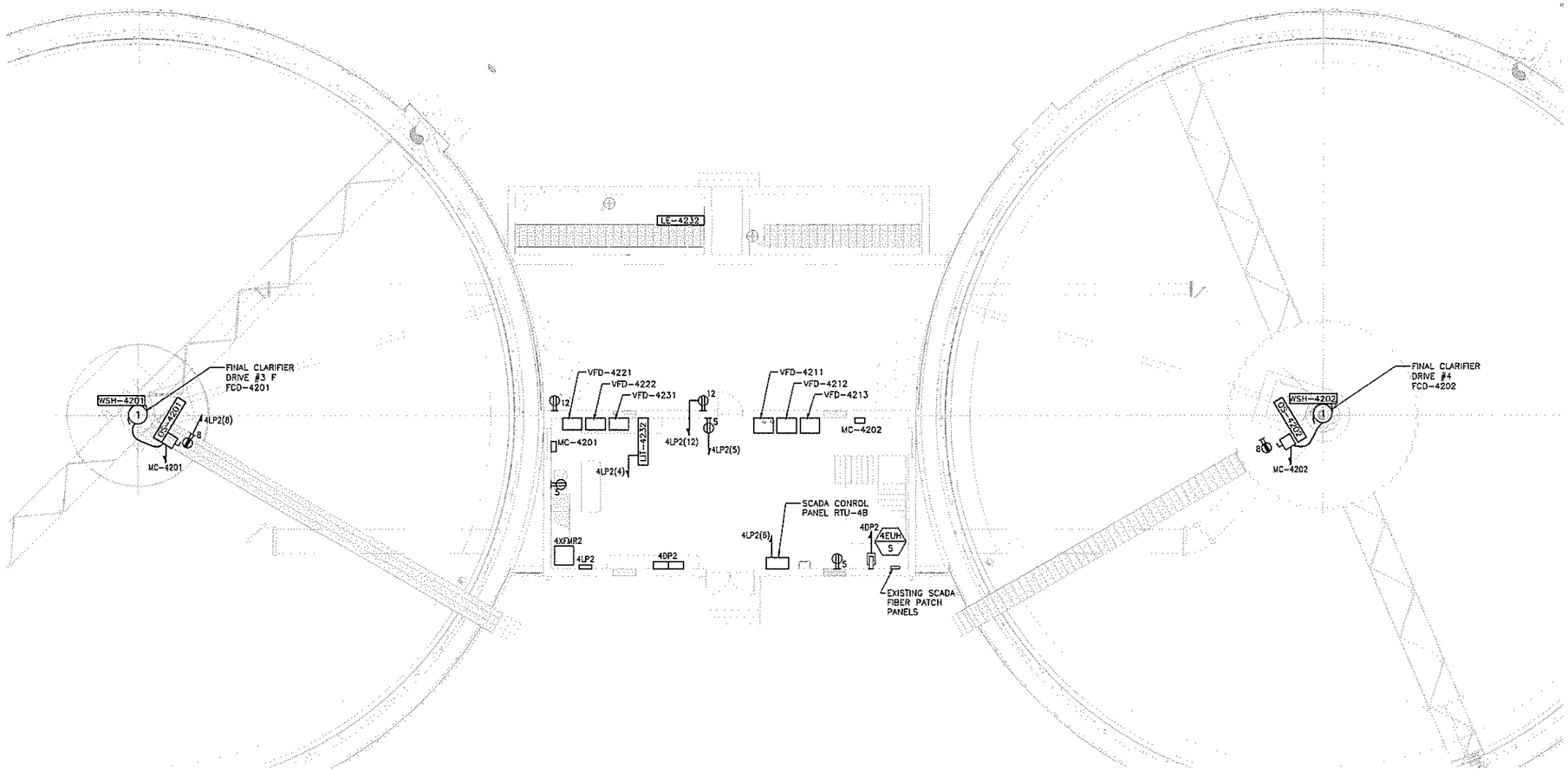

UPPER LEVEL PLAN

SCALE: 1/8"= 1'-0"

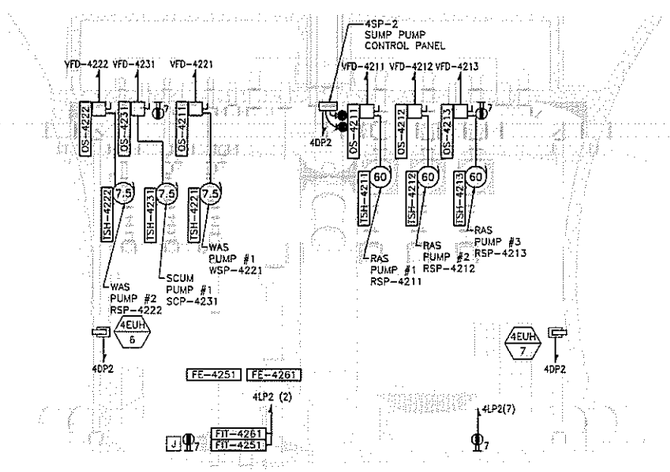

LOWER LEVEL PLAN

SCALE: 1/8"= 1'-0"

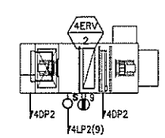

ROOF PLAN

SCALE: 1/8"= 1'-0"

PREPARED BY

BETA

www.BETA-Inc.com

REGISTERED PROFESSIONAL

NOT FOR CONSTRUCTION (CONCEPTUAL)

SUBCONSULTANT

SAR ENGINEERING, INC.

Mechanical/Electrical Engineers
150 Grossman Drive, Suite 399
Braintree, Massachusetts 02184
617 328-9235
web: www.sar.com

PROJECT

Taunton Wastewater Treatment Facility Improvements Phase 2

Taunton, MA

TITLE

Electrical Final Clarifiers No. 3 & 4 Plan & Sludge Pump Station No.2 Power Plan

NO.	REVISIONS	DATE

DRAWN BY:	RLB
DESIGNED BY:	MC
CHECKED BY:	MC
ISSUE DATE:	10/16/2020
BETA JOB NO.:	6050

SCALE

AS SHOWN

UNLESS OTHERWISE NOTED OR CHANGED BY REPRODUCTION

For Review Only

SHEET NO.

E-4.6

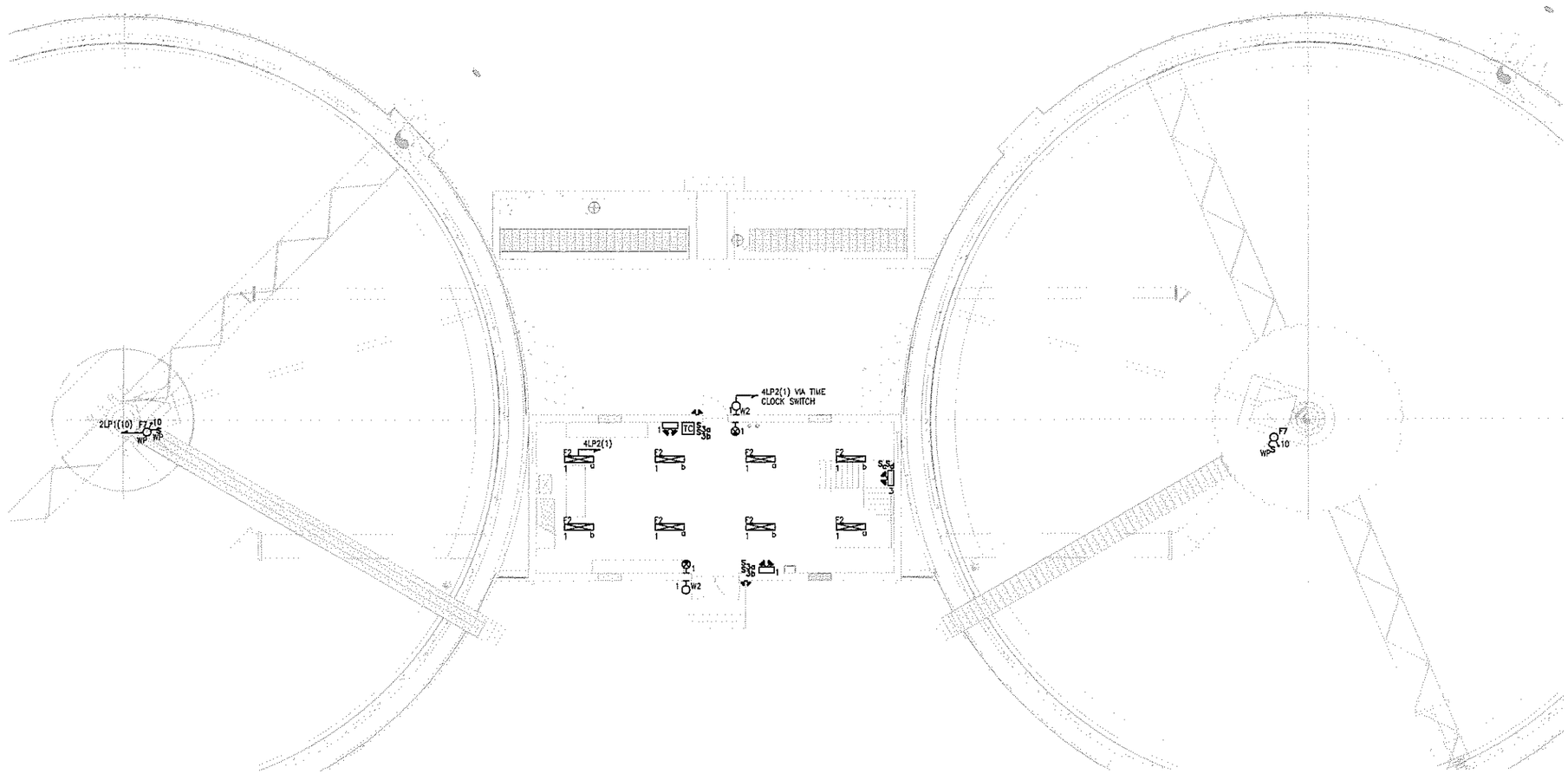

UPPER LEVEL PLAN
SCALE: 1/8"= 1'-0"

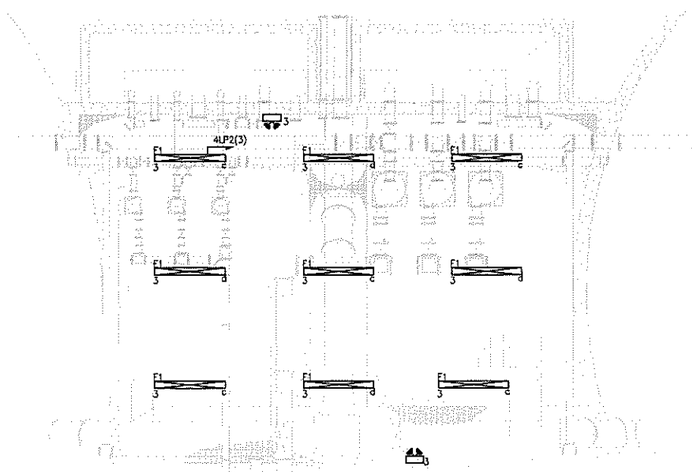

LOWER LEVEL PLAN
SCALE: 1/8"= 1'-0"

PREPARED BY

BETA
www.BETA-Inc.com

REGISTERED PROFESSIONAL

NOT FOR CONSTRUCTION (CONCEPTUAL)

SUBCONSULTANT

SAR ENGINEERING, INC.
Mechanical/Electrical Engineers
150 Grossman Drive, Suite 309
Braintree, Massachusetts 02184
617 328-9115
web: www.sar.com

PROJECT

Taunton Wastewater Treatment Facility Improvements Phase 2

Taunton, MA

TITLE

Electrical Final Clarifiers No. 3 & 4 Plan & Sludge Pump Station No.2 Lighting Plan

NO.	REVISIONS	DATE

DRAWN BY:	RLB
DESIGNED BY:	MC
CHECKED BY:	MC
ISSUE DATE:	10/16/2020
BETA JOB NO.:	6050

SCALE

AS SHOWN

UNLESS OTHERWISE NOTED OR CHANGED BY REPRODUCTION

For Review Only

SHEET NO.

E-4.7

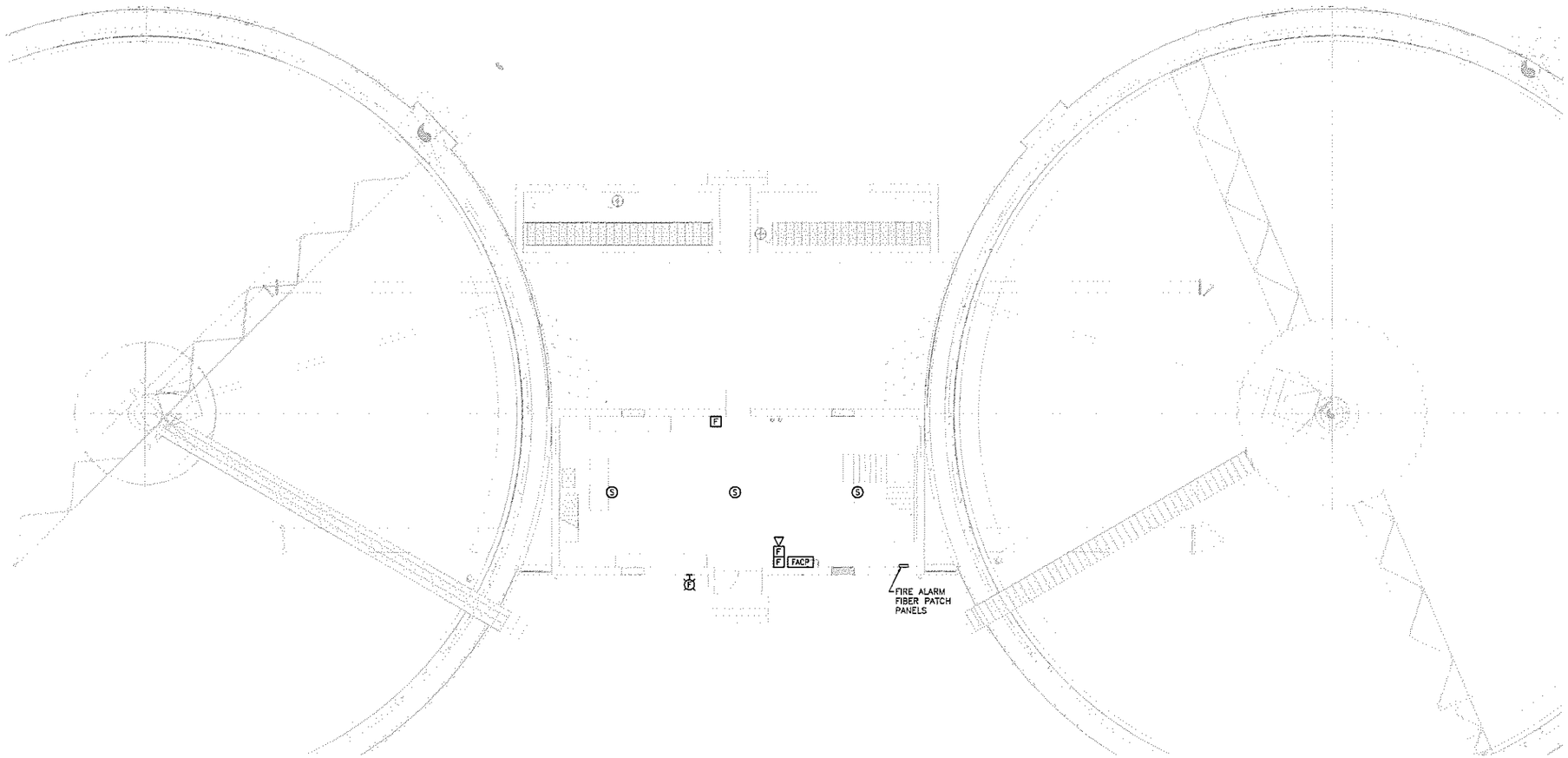

UPPER LEVEL PLAN
SCALE: 1/8"= 1'-0"

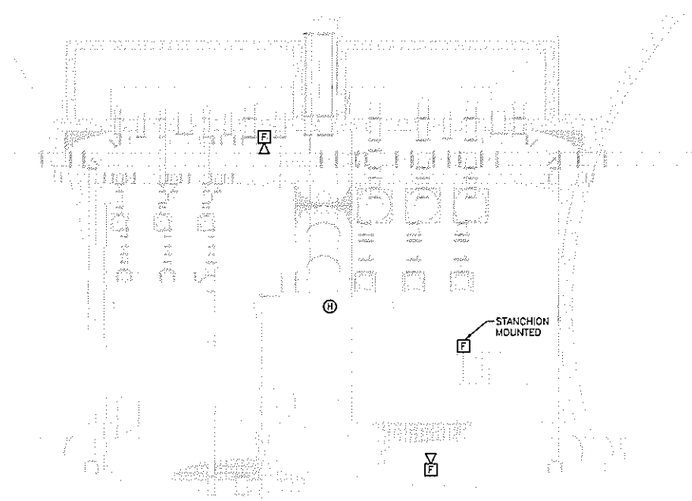

LOWER LEVEL PLAN
SCALE: 1/8"= 1'-0"

PREPARED BY

BETA
www.BETA-Inc.com

REGISTERED PROFESSIONAL

NOT FOR
CONSTRUCTION
(CONCEPTUAL)

SUBCONSULTANT

SAR
ENGINEERING, INC.
Mechanical/Electrical Engineers
150 Grossman Drive, Suite 309
Braintree, Massachusetts 02184
617 328-9315
web: www.sar.com

PROJECT

Taunton Wastewater Treatment Facility Improvements Phase 2

Taunton, MA

TITLE

Electrical Final Clarifiers No. 3 & 4 Plan & Sludge Pump Station No.2 Fire Alarm Plan

NO.	REVISIONS	DATE

DRAWN BY:	RLB
DESIGNED BY:	MC
CHECKED BY:	MC
ISSUE DATE:	10/16/2020
BETA JOB NO.:	6050

SCALE

AS SHOWN

UNLESS OTHERWISE NOTED OR CHANGED BY REPRODUCTION

For Review Only

SHEET NO.

E-4.8

NOTES:

1. PROVIDE SEPARATE PULL BOXES ON THE SIDE OF TANK FOR POWER WIRING, SIGNAL WIRING, AND CONTROL WIRING FOR INTERFACE TO DUCTBANK.

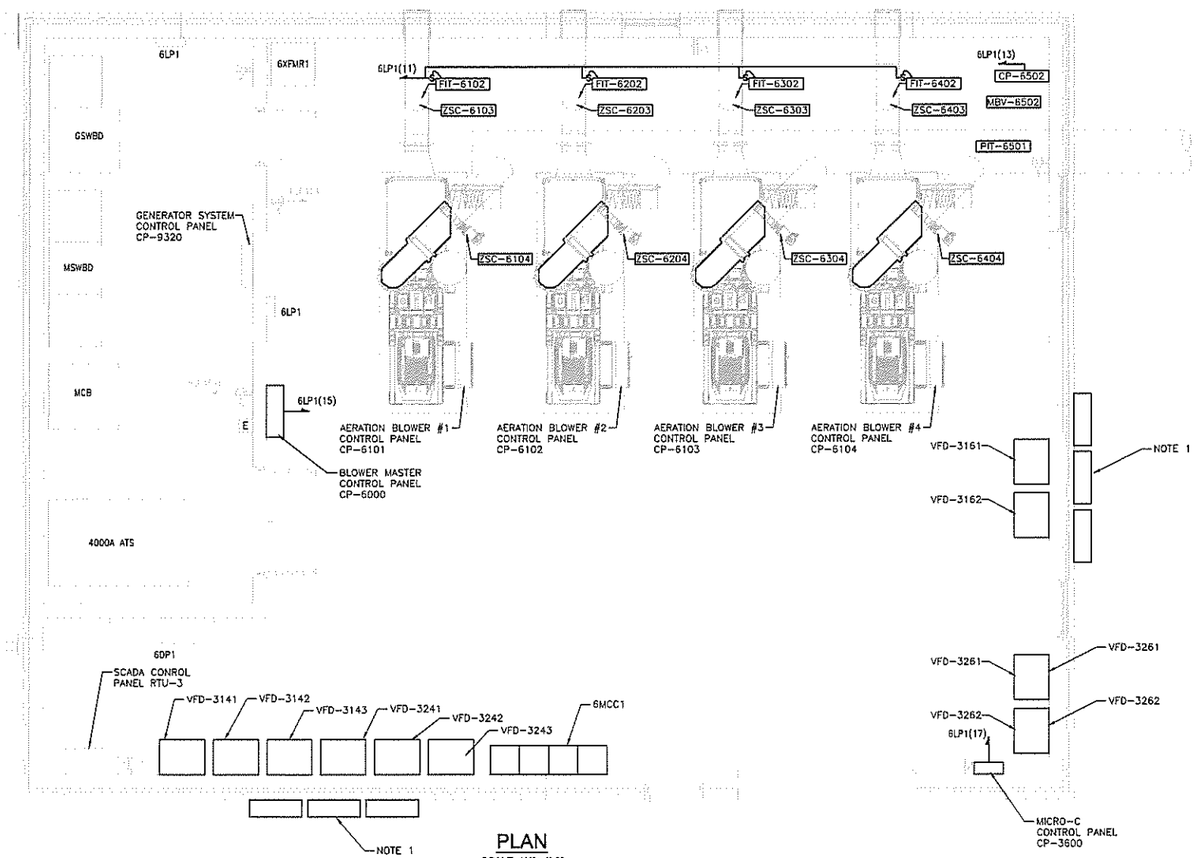

PLAN
SCALE: 1/4"= 1'-0"

PREPARED BY

BETA
www.BETA-Inc.com

REGISTERED PROFESSIONAL

SUBCONSULTANT

SAR ENGINEERING, INC.
Mechanical/Electrical Engineers
150 Grossman Drive, Suite 309
Braintree, Massachusetts 02184
617 328-9215
web: www.sar.com

PROJECT

Taunton Wastewater Treatment Facility Improvements Phase 2

Taunton, MA

TITLE

Electrical Blower Building Power Plan

NO.	REVISIONS	DATE

DRAWN BY:	RLB
DESIGNED BY:	MC
CHECKED BY:	MC
ISSUE DATE:	10/16/2020
BETA JOB NO.:	6050

SCALE

4 0 4 8
SCALE IN FEET: 1"=4'

UNLESS OTHERWISE NOTED OR CHANGED BY REPRODUCTION

Not for Construction

SHEET NO.

E-6.1

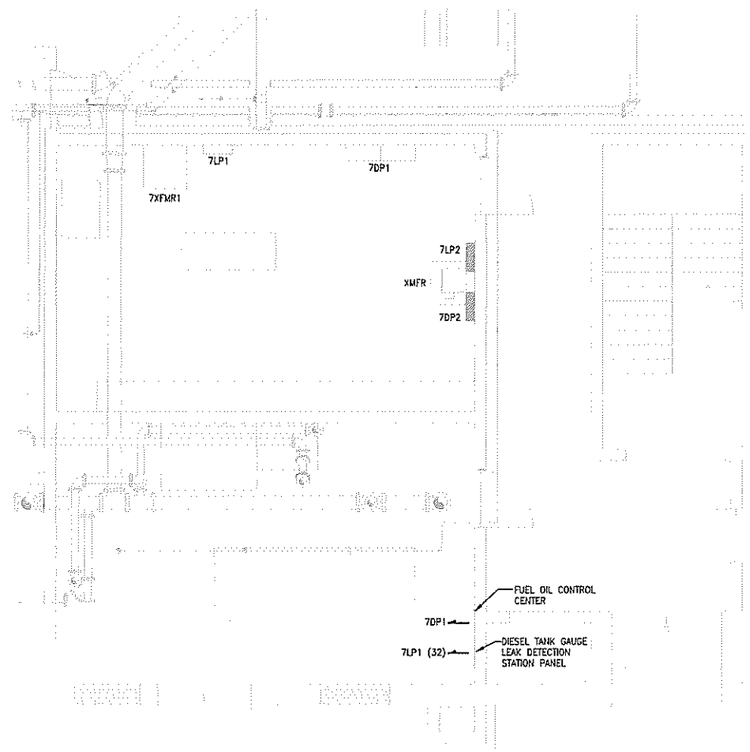

SECOND FLOOR - PART PLAN

SCALE: 1/4"= 1'-0"

PREPARED BY

BETA

www.BETA-Inc.com

REGISTERED PROFESSIONAL

SUBCONSULTANT

SAR ENGINEERING, INC.

Mechanical/Electrical Engineers
150 Grossman Drive, Suite 309
Braintree, Massachusetts 02184
617 328-9315
web: www.sar.com

PROJECT

Taunton Wastewater Treatment Facility Improvements Phase 2

Taunton, MA

TITLE

Electrical
Solids Handling
Building
First Floor Part Plan

NO.	REVISIONS	DATE

DRAWN BY:	RLB
DESIGNED BY:	MC
CHECKED BY:	MC
ISSUE DATE:	10/16/2020
BETA JOB NO.:	6050

SCALE

AS SHOWN

UNLESS OTHERWISE NOTED OR CHANGED BY REPRODUCTION

Not for Construction

SHEET NO.

E-7.1

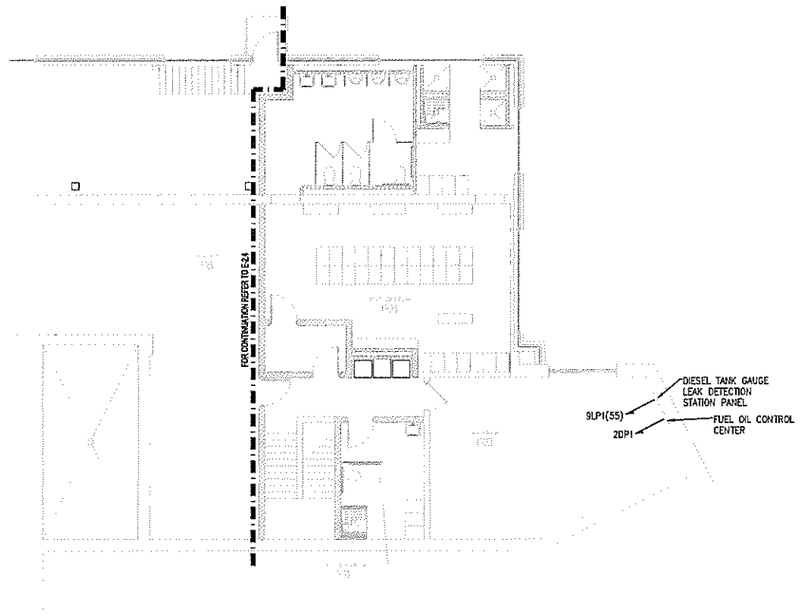

BASEMENT FLOOR - PLAN

SCALE: 1/8"= 1'-0"

PREPARED BY

BETA

www.BETA-Inc.com

REGISTERED PROFESSIONAL

SUBCONSULTANT

SAR ENGINEERING, INC.

Mechanical/Electrical Engineers
150 Grossman Drive, Suite 309
Braintree, Massachusetts 02184
617 328-9315
web: www.sar.com

PROJECT

Taunton Wastewater Treatment Facility Improvements Phase 2

Taunton, MA

TITLE

Electrical Control & Admin. Building Basement Power Plan

NO.	REVISIONS	DATE

DRAWN BY:	RLB
DESIGNED BY:	MC
CHECKED BY:	MC
ISSUE DATE:	10/16/2020
BETA JOB NO.:	6050

SCALE

AS SHOWN

UNLESS OTHERWISE NOTED OR CHANGED BY REPRODUCTION

Not for Construction

SHEET NO.

E-9.1

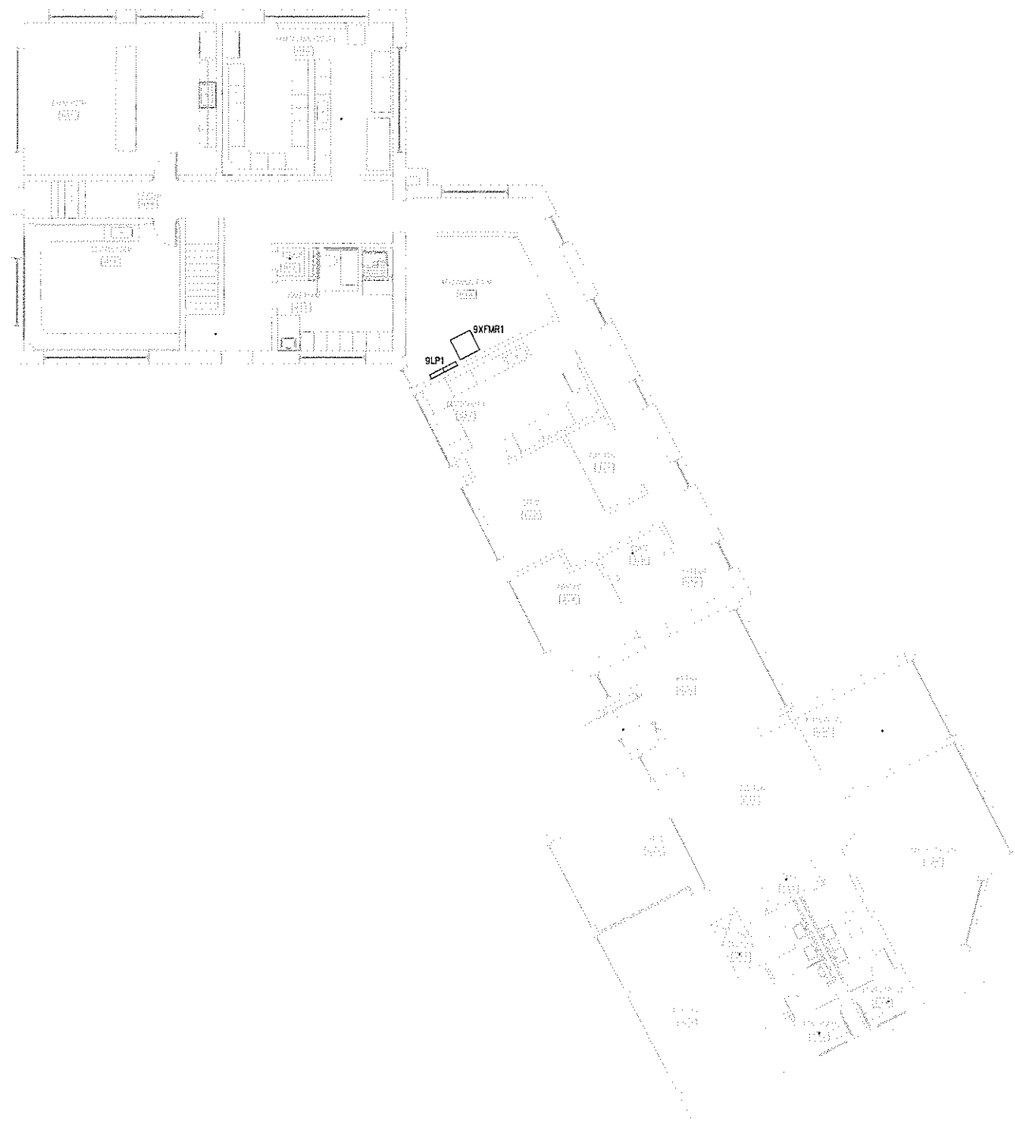

FIRST FLOOR - PLAN
SCALE: 1/8"= 1'-0"

PREPARED BY

BETA
www.BETA-Inc.com

REGISTERED PROFESSIONAL

SUBCONSULTANT

SAR ENGINEERING, INC.
Mechanical/Electrical Engineers
150 Grossman Drive, Suite 309
Braintree, Massachusetts 02184
617 328-9215
web: www.sar.com

PROJECT

Taunton Wastewater Treatment Facility Improvements Phase 2

Taunton, MA

TITLE

Electrical Control & Admin. Building First Floor Power Plan

NO.	REVISIONS	DATE

DRAWN BY:	RLB
DESIGNED BY:	MC
CHECKED BY:	MC
ISSUE DATE:	10/16/2020
BETA JOB NO.:	6050

SCALE

AS SHOWN

UNLESS OTHERWISE NOTED OR CHANGED BY REPRODUCTION

Not for Construction

SHEET NO.

E-9.2

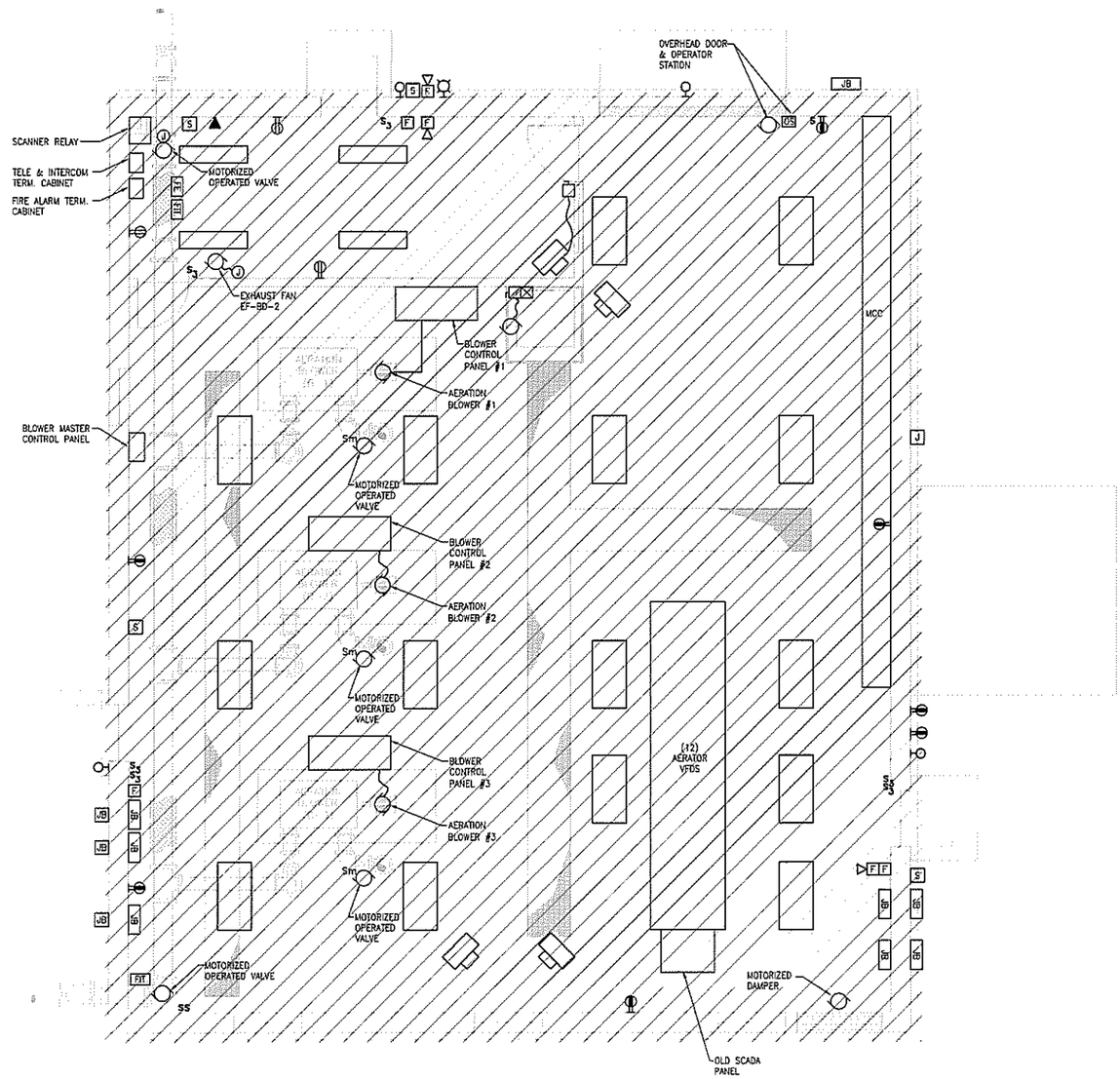

PLAN
SCALE: 1/4"= 1'-0"

PREPARED BY

BETA
www.BETA-Inc.com

REGISTERED PROFESSIONAL

SUBCONSULTANT

SAR ENGINEERING, INC.
Mechanical/Electrical Engineers
150 Grossman Drive, Suite 309
Braintree, Massachusetts 02184
617 328-9315
web: www.sar.com

PROJECT

Taunton Wastewater Treatment Facility Improvements Phase 2

Taunton, MA

TITLE

Electrical Demolition Existing Blower Building Plan

NO.	REVISIONS	DATE

DRAWN BY:	RLB
DESIGNED BY:	MC
CHECKED BY:	MC
ISSUE DATE:	10/16/2020
BETA JOB NO.:	6050

SCALE

AS SHOWN

UNLESS OTHERWISE NOTED OR CHANGED BY REPRODUCTION

For Review Only

SHEET NO.

E-9.3

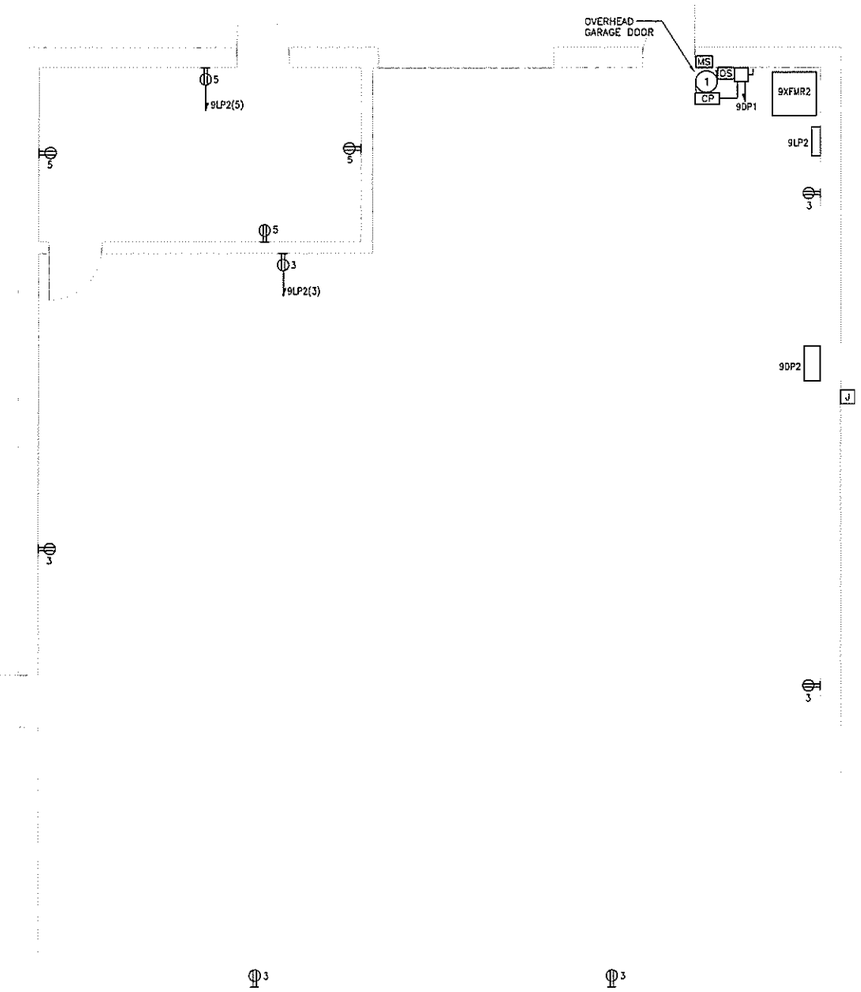

PLAN
SCALE: 1/4"= 1'-0"

PREPARED BY

BETA
www.BETA-Inc.com

REGISTERED PROFESSIONAL

SUBCONSULTANT

SAR ENGINEERING, INC.
Mechanical/Electrical Engineers
150 Grossman Drive, Suite 309
Braintree, Massachusetts 02184
617 328-9315
web: www.sar.com

PROJECT

Taunton Wastewater Treatment Facility Improvements Phase 2

Taunton, MA

TITLE

Electrical Storage Building Power Plan

NO.	REVISIONS	DATE

DRAWN BY:	RLB
DESIGNED BY:	MC
CHECKED BY:	MC
ISSUE DATE:	10/16/2020
BETA JOB NO.:	6050

SCALE

AS SHOWN

UNLESS OTHERWISE NOTED OR CHANGED BY REPRODUCTION

For Review Only

SHEET NO.

E-9.4

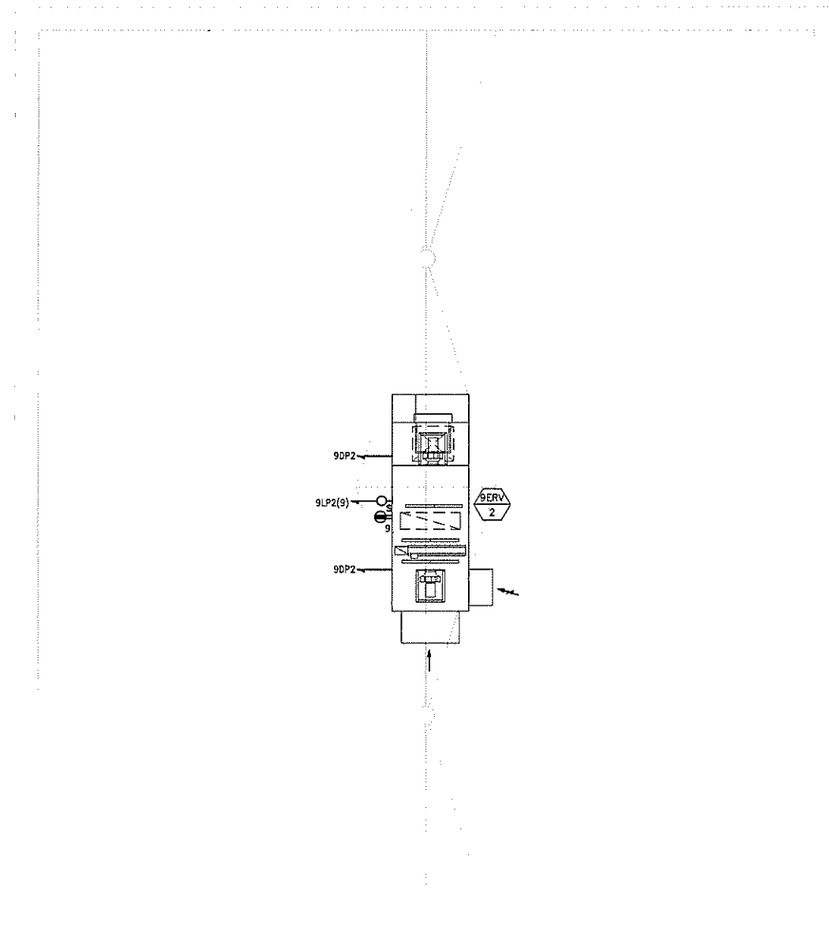

PLAN
SCALE: 1/4"= 1'-0"

PREPARED BY

BETA
www.BETA-Inc.com

REGISTERED PROFESSIONAL

SUBCONSULTANT

SAR ENGINEERING, INC.
Mechanical/Electrical Engineers
150 Grossman Drive, Suite 309
Braintree, Massachusetts 02184
617.328.9215
web: www.sar.com

PROJECT

Taunton Wastewater Treatment Facility Improvements Phase 2

Taunton, MA

TITLE

Electrical Storage Building Power Roof Plan

NO.	REVISIONS	DATE

DRAWN BY:	RLB
DESIGNED BY:	MC
CHECKED BY:	MC
ISSUE DATE:	10/16/2020
BETA JOB NO.:	6050

SCALE

AS SHOWN

UNLESS OTHERWISE NOTED OR CHANGED BY REPRODUCTION

For Review Only

SHEET NO.

E-9.5

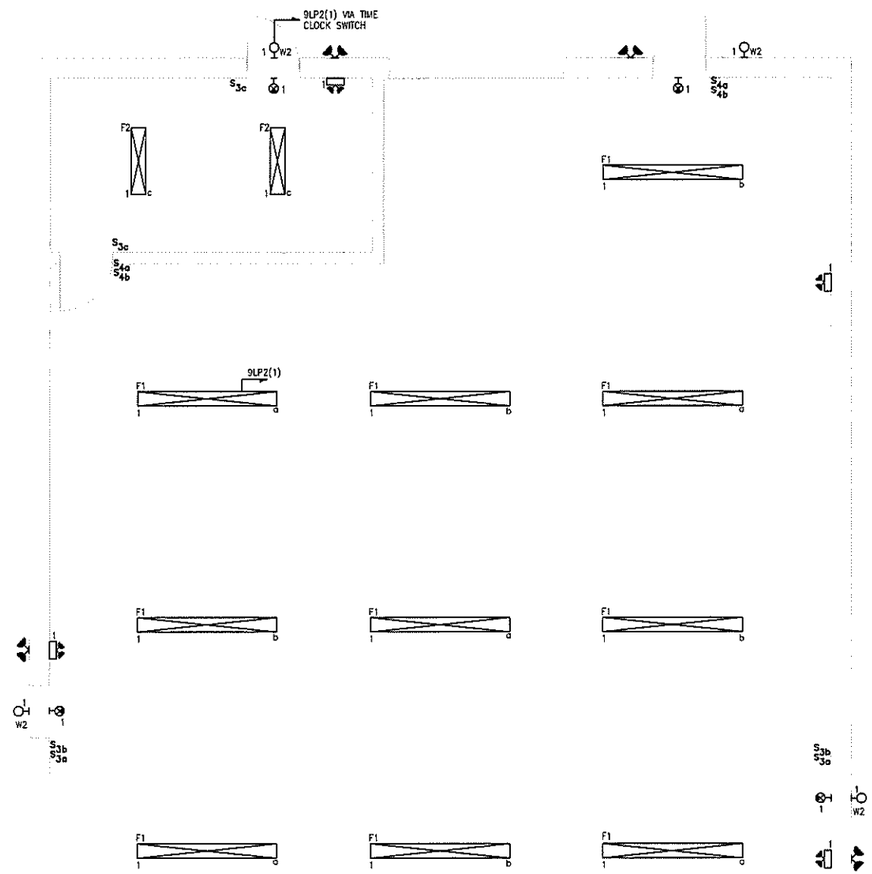

PLAN
SCALE: 1/4"= 1'-0"

PREPARED BY

BETA
www.BETA-Inc.com

REGISTERED PROFESSIONAL

SUBCONSULTANT

SAR ENGINEERING, INC.
Mechanical/Electrical Engineers
150 Grossman Drive, Suite 309
Braintree, Massachusetts 02184
617 328-9315
web: www.sar.com

PROJECT

Taunton Wastewater Treatment Facility Improvements Phase 2

Taunton, MA

TITLE

Electrical Storage Building Lighting Plan

NO.	REVISIONS	DATE

DRAWN BY:	RLB
DESIGNED BY:	MC
CHECKED BY:	MC
ISSUE DATE:	10/16/2020
BETA JOB NO.:	6050

SCALE

AS SHOWN

UNLESS OTHERWISE NOTED OR CHANGED BY REPRODUCTION

For Review Only

SHEET NO.

E-9.6

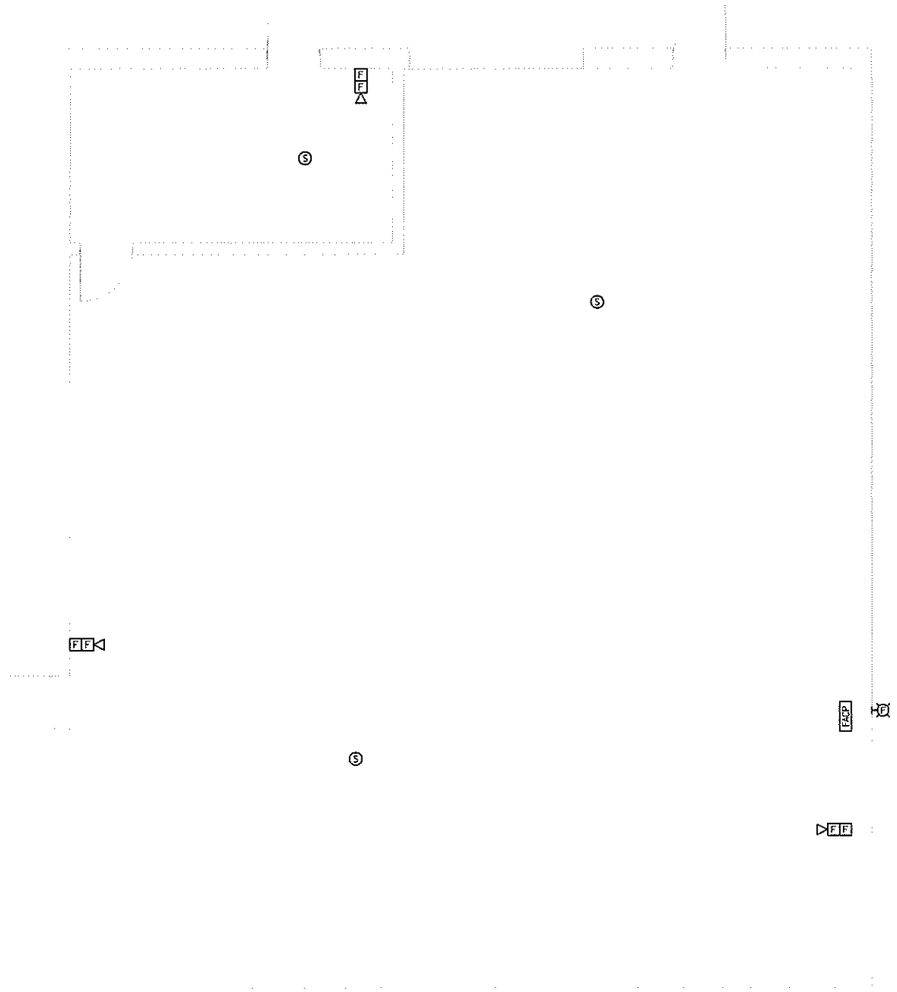

PLAN
SCALE: 1/4"= 1'-0"

PREPARED BY

BETA
www.BETA-Inc.com

REGISTERED PROFESSIONAL

SUBCONSULTANT

SAR ENGINEERING, INC.
Mechanical/Electrical Engineers
150 Grossman Drive, Suite 309
Braintree, Massachusetts 02184
617 328-9215
web: www.sar.com

PROJECT

Taunton Wastewater Treatment Facility Improvements Phase 2

Taunton, MA

TITLE

Electrical Storage Building
Fire Alarm Plan

NO.	REVISIONS	DATE

DRAWN BY:	RLB
DESIGNED BY:	MC
CHECKED BY:	MC
ISSUE DATE:	10/16/2020
BETA JOB NO.:	6050

SCALE

AS SHOWN

UNLESS OTHERWISE NOTED OR CHANGED BY REPRODUCTION

For Review Only

SHEET NO.

E-9.7